PIPER & MARBURY
L.L.P.
1200 NINETEENTH STREET, N.W.
WASHINGTON, D.C. 20036-2430
202-861-3900
FAX: 202-223-2085

BALTIMORE
NEW YORK
PHILADELPHIA
EASTON

WRITER'S DIRECT NUMBER
(202) 861-6477
FAX: (202) 223-2085
Rlowe@pipermar.com

EX PARTE OR LATE FILED

April 8, 1999

RECEIVED

APR - 8 1999

FEDERAL COMMUNICATIONS COMMISSION
OFFICE OF THE SECRETARY

BY HAND DELIVERY

Ms. Magalie Roman Salas
Secretary
Federal Communications Commission
1919 M Street, N.W.
Room 222
Washington, DC 20554

Re: Docket Nos. 98-147, 96-98 and 99-68
Ex Parte Presentation

Dear Ms. Roman Salas:

Pursuant to Section 1.1206 of the Commission's rules, this is to advise you that, in my capacity as counsel to Prism Communication Services, Inc. ("Prism"), a provider of advanced telecommunications services, I, along with Randy Lowe of Piper & Marbury and a representative of Prism met on April 6, 1999, with Linda Kinney, Esq., Legal Advisor to Commissioner Ness.

During this meeting, we discussed Prism's position with respect to (a) issues remaining to be decided in the advanced telecommunications docket and (b) the Commission's decision pertaining to the jurisdictional nature of internet service provider (ISP) traffic. A copy of the following enclosures were submitted to Ms. Kinney:

- A folder of information describing Prism and the types of services offered by Prism; and

- A bullet-point outline of Prism's position on the remaining issues to be decided in Docket No. 98-147.

In accordance with the Commission's rules, I am hereby submitting one original and one copy of this letter and its enclosures for the above-referenced proceeding.

Sincerely,

Randall B. Lowe

RBL/deb

Enclosures

cc(w/o encl.): Kevin J. Martin
Linda Kinney
Ed Krachmer
Tamara Preiss
Paul Gallant
Thomas Power

PRISM COMMUNICATION SERVICES, INC.
COMPANY SNAPSHOT

Profile Prism Communication Services, Inc., is a next-generation advanced communications company using innovative digital modem technology to provide high-speed data, voice and Internet connectivity across the existing copper telephone infrastructure. The same copper loops that have been carrying telephone service for 75 years have enough bandwidth to support simultaneous voice, data and Internet access to nearly all of today's homes and businesses. While cable companies struggle to lay cable nationwide, telecommuters waste time on slow dial-up accounts, and small businesses struggle with the complex and expensive ISDN and T1 lines. Prism provides users with everything they need today for always-connected data and voice services.

Technology Designed to meet the exploding demand for bandwidth, Prism's network uses Nortel Networks™ splitterless DSL technology. Customers simply plug a digital modem into a phone jack using the existing copper telephone wire. This dual voice and data network backbone provides a secure, "always on" connection of up to one megabit (mbps) "downstream" to the user and 120 kilobits (kbps) "upstream." That's eight times faster than dual-channel ISDN products and 17 times faster than popular 56K analog modems being used today.

Customers Small- and medium-sized businesses and individual power users. Today, Prism has more than 1,500 customers in New York City.

Founded 1997. Launch RED high-speed service January 31, 1999.

Employees 135

Distribution Prism markets its services directly and through value-added resellers.

Headquarters New York, NY

Management

Terrence Peck	-	President & CEO
Montgomery Cornell		Chief Financial Officer
Dennis Kruse	-	Chief Marketing Officer
Michael Ford	-	Chief of Staff
Joe Weiss	-	Chief Telecom Officer
Vincent Morreale	-	Senior Vice President, Sales
Sophia Corona	-	VP, Network Provisioning
Robert Oliver	-	VP, Engineering
Debra Niewald	-	VP, Corporate Communications
Greg B. Thomas	-	VP, Market & Product Development
Rick Lochner	-	VP, Information Technology
Richard Merson	-	VP, Customer Sales and Service

Financial Prism Communications is a wholly-owned subsidiary of Comdisco, Inc. (NYSE: CDO), a technology services company and a leader in providing technology infrastructure management services, including business continuity services, these areas, and leasing and remarketing services.

PRISM

CORPORATE PROFILE

Prism Communication Services, Inc. is connecting America without re-wiring it. This advanced communications company is using innovative digital modem technology to provide high-speed data services across the existing copper telephone infrastructure.

The same copper loops that have been carrying telephone service for 75 years have plenty of bandwidth to support simultaneous voice, data and Internet access to more than 90 percent of today's homes and businesses. Prism's innovative service, simply called "**RED**," lets users plug a Nortel Networks™ digital modem into the existing phone jack and the Ethernet card in their PC to achieve downloads of up to 1 Megabit per second (Mbps)—17 times faster than a 56 Kbps modem and eight times faster than a dual-channel ISDN line. At these speeds, users can download video of the David Letterman's nightly "Top Ten"—or that critical business presentation—in just seconds.

While cable companies struggle to lay cable nationwide, telecommuters waste time on slow dial-up accounts, and small businesses struggle with complex and expensive ISDN and T1 lines, **RED** delivers users everything they need today to keep their business moving on the Internet.

THE SMALL BUSINESS BOOM

The Gartner Group estimates that remote access users will grow from more than 15 million in 1997 to more than 54 million by the year 2002. And while large businesses are building telecommuter workforces, the eight to ten million small businesses with less than 200 employees are thriving and represent a virtually untapped market for technology, Internet and telecommunications services.

Service and simplicity are key for small businesses and telecommuters that aren't technically-savvy and often don't have any dedicated technology professionals with the time to sort through a quagmire of voice and data services from a handful of different—and often competing—providers. Smaller companies just don't receive the attention they need from ISPs, RBOCs and carriers, which rarely give on-time, priority care and support to small business customers. This represents a tremendous opportunity for new service providers to capture an emerging market with services specifically designed for small businesses and power users.

-more-

Prism Communication Services, Inc.
8 West 19th Street
New York, New York 10011

Telephone: 212.366.5001
Facsimile: 212.366.1999
www.prismcommunication.net

RED MEANS GO

When the download bar isn't moving, neither are you. **RED** levels the Internet playing ground, giving small businesses the same sophisticated communications services that large corporations take for granted. **RED** uses digital modems—breakthrough technology that eliminates the bottlenecks commonly found in the copper loops in every home and office. **RED** delivers lightning-fast data services over a single phone line, offering a unique, splitterless DSL service to New York and other regions that overcomes many of the drawbacks associated with traditional DSL services (ADSL, etc.).

Prism is building an advanced digital ATM network that mirrors Bell Atlantic at every stop in Manhattan and has as much switching power. Once the modem is connected, Prism makes a simple line card change in its switching facilities and a lone telecommuter or entire office is connected with high-speed Internet access. **RED** is supported by a team of experts committed to resolving problems on the first call and without a hassle.

Customers may choose from three different always-on, high-speed data connectivity offerings:

- ***RED Res***^{SM}, a 640 Kbps downstream service intended for telecommuters and power users. One static IP address and one e-mail account are included. ***RED Res*** pricing starts at $79.95 a month with a one-year contract or $99.95 a month with no contract.

- ***RED Single***^{SM}, up to 1 Mbps downstream service tailored toward home office users and telecommuters that need even more bandwidth for large file-transfers, graphics and other needs. This service also includes one static IP address and one e-mail account. ***RED Single*** pricing starts at $129.95 a month with a two-year contract, $149.95 a month with a one-year contract and $199.95 a month with no contract.

- ***RED Network***^{SM}, up to 1.0 Mbps downstream service designed to provide Internet access to many employees working in small businesses or remote offices. Six static IP addresses and six e-mail accounts are provided. ***RED Network*** pricing starts at $299.95 a month with a two-year contract, $349.95 a month with a one-year contract and $399.95 a month with no contract.

A WELL-CONNECTED COMPANY

Prism is a wholly-owned subsidiary of Comdisco™ (NYSE: CDO), the world's largest provider of leasing, asset management and data recovery services. In July, 1998 Prism awarded Nortel Networks® (NYSE: NT) a $330 million, three-year contract for DMS SuperNode central office switches, Magellan Passport ATM switches and digital modem equipment.

-more-

WELCOME TO THE ALWAYS-CONNECTED WORLD

RED combines yesterday's wiring with today's hottest technology to make advanced communications services as ubiquitous and as easy to use as the common telephone. It's one of the innovators paving the way for fast, easy access to every home and office in the country. Prism is rapidly expanding its service nationwide, defining the "NextNet" that fuses voice and data into a stream of new always-connected services—ranging from high-quality video and audio, video conferencing and interactive voice response to corporate intranets and extranet services.

So welcome to the always-connected world, where anyone can instantly download video clips from last night's news or zoom in to check on their children in school or daycare through a direct video feed. You'll soon be running all your software and services online—getting instant updates to your word processor and browser each time you connect. Whether you're ready or not, fast, simple bandwidth is here and it's available through your phone lines.

RED means go—so try and keep up.

Contact: *Debra Niewald at Prism Communication Services, Inc.*
212-366-5545; dniewald@prismcsi.net

COMDISCO
A TECHNOLOGY SERVICES COMPANY

news release

For Immediate Release

Contact: Comdisco, Inc.

Media Contact
Mary Moster
847/518-5147
mcmoster@comdisco.com

Contact: Prism

Debra Niewald
Prism Communication Services, Inc.
917-305-2133
dniewald@prismcsi.net

Gil Isenstein or Deborah Souza
Schwartz Communications, Inc.
781-684-0770
gili@schwartz-pr.com
debs@schwartz-pr.com

COMDISCO STRENGTHENS SERVICES STRATEGY WITH ACQUISITION OF PRISM

Acquisition of Advanced Communications Provider Complements Strategy to Increase Worldwide Service Offerings for High-growth, Next-generation Technologies

ROSEMONT, Ill.—March 24, 1999—Comdisco, Inc. (NYSE: CDO) announced today that it has acquired Prism Communication Services, Inc., an advanced communications company headquartered in New York City. The terms of the acquisition were not disclosed.

"As Comdisco focuses its services portfolio on high-growth technology services, Prism offers a unique opportunity to offer our customers the best technology infrastructure solutions. We can now couple managed network, lifecycle and business continuity services with next-generation technologies like high-speed data and extranet," said Nicholas K. Pontikes, president and CEO of Comdisco. "In the coming months, we plan to introduce a new class of integrated voice, data and business continuity services, based on Prism offerings, to existing and new customers worldwide."

Prism will operate as a wholly-owned subsidiary of Comdisco, expanding the company's service offerings, which now include global leasing, business continuity, and network and lifecycle management services.

Prism recently launched the successful New York City debut of RED—its always-on, fast Internet access using digital subscriber line (DSL) technology that is 17 times faster than the fastest analog modems. Targeted primarily to small businesses, RED offers sophisticated communications services at an affordable cost. In addition, the RED service allows for simultaneous voice and data all over a single standard telephone line.

Based on the successful completion of its New York City deployment, Prism plans to rapidly expand its RED Service. In June 1998, in conjunction with Prism's aggressive strategy to introduce fast Internet service throughout the Northeast corridor of the U.S., Prism awarded Nortel Networks a $330 million, three-year contract for 30 DMS host systems, associated software and professional services. Prism also recently formed a strategic partnership with BCE Nexxia, Bell Canada's new national IP-broadband solutions company, to deliver Prism's RED Service, as well as a new class of advanced data services, to small business customers and power users in Toronto and Montreal.

"This partnership reflects a shared vision to delivering best-of-breed communications services now," said Terrence Peck, Prism's President and CEO. "As part of Comdisco, Prism will be able to offer its home office and small-to mid-sized business customers the kinds of services Comdisco has traditionally provided to large corporations. In turn, Comdisco can leverage Prism's network to offer large corporations advanced, high-speed data and voice access for mobile and home office employees."

In July 1998, Comdisco committed $75 million in equity and lease financing for a 25 percent stake in Prism. The company's current executive management will report to Nicholas K. Pontikes, president and CEO of Comdisco.

About Comdisco

Comdisco Inc. (NYSE:CDO), a technology services company, is one of the world's leading providers of solutions that help organizations reduce technology cost and risk. These services include desktop management; business continuity; network services; Year 2000 testing; equipment leasing and remarketing. For the 12 months ending December 31, 1998, Comdisco's revenues were $3.4 billion. For more information visit Comdisco's Web site at http://www.comdisco.com

About Prism

Prism Communication Services, Inc. is a next-generation communications company with headquarters in New York City. For businesses and individuals alike, Prism is the single source for current and future high-speed data, Internet, video and voice solutions—delivered through the company's advanced digital network. For more information, please call the company at 917-305-2000. For more information on RED, please visit www.redconnect.net

March 2, 1999 Forbes Digital Tool Online Magazine

Red-hot Prism

By Om Malik

Can a small startup company get attention and attract new customers? Sure it can, as long as it can afford a multimillion dollar advertising campaign and has the clout to get prime spots on the Super Bowl telecast.

That's precisely what Prism Communications, a New York-based Competitive Local Exchange Carrier (CLEC) did when it launched its "Red" high-speed Internet access service. The two-year-old company had 11 spots on Super Bowl day--with one simple message, "17 times faster than a 56K modem" against a bloodred backdrop.

The campaign did the trick, and even before the Denver Broncos were done making a joke of the Atlanta Falcons, Prism's toll-free number was clogged and its web site was busier than the Long Island Expressway during rush hour. Since then the company has literally painted the Big Apple red with its ads in the major daily newspapers and on billboards and bus shelter displays.

The 80-person startup, which is likely to be acquired by Comdisco (CDO), is headed by former AT&T executive Terence Peck, who is spending $10 million to get the broadband message out to New Yorkers. Based in the heart of Silicon Alley, the company is offering 640 kbps for about $80 dollars a month for consumers and about 1 mbps for $350 a month for small and medium-size businesses.

Fast, affordable high-speed Internet access minus the techno geek speak and complications.

The technology behind the service is Northern Telecom's version of digital subscriber line (DSL) technology, which allows high-speed data communication over plain old copper wires. Once you sign up for the Red service, Prism installs a new phone line in your house (or business) at a cost of $299. The modem is included as part of the overall package. "We are building a brand," says Dennis A. Kruse, chief marketing officer of the company, justifying the big-ticket marketing campaign. Red service is targeting the small and medium-size businesses with its marketing mantra: fast, affordable high-speed Internet access minus the techno geek speak and complications. "The Red advertising campaign is designed precisely to highlight the ease of use," he adds.

Kruse points out that while other CLECs are busy selling wholesale access to large corporate customers and Internet service providers, Prism wants to have a "relationship with the customer." Prism will need that relationship because sometime this summer, local Baby Bell, Bell Atlantic (BEL) is going to start selling its version of DSL high-speed access in partnership with America Online (AOL). Not to mention the fact that MCI WorldCom (WCOM) and Sprint (FON) are going after the same small- to medium-size-business market.

But bandwidth-hungry New Yorkers are not waiting; about 1,000 have already signed up for the Red service, which is based on a 1-Meg modem made by Canadian networking equipment maker, Northern Telecom (NT). That is 5% of the 20,000 target the company has set itself over next 12 months. The $10 million marketing budget translates into about $500 to be spent on every customer.

Since the company owns much of its network infrastructure (it spans from Maine to North Carolina), Prism expects to break even by the end of 1999, and make money within a year, thanks to the fact that it will be launching the service in six more East Coast cities, including Philadelphia and Washington, D.C. Also in the cards is a 4-megabytes-per-second Ether Loop package--basically a high-speed access service--for small and medium-size businesses. Twelve-month revenue target: $50 million.

The bold marketing campaign and the prospect of high-speed Internet access has many wondering about the company. Fifty-year-old Terrence Peck, after having worked at a series of phone companies including AT&T (T) and MCI, started Prism in 1997. At the time, the budding CLEC was called Transwire Communications.

With some $20 million in venture capital funding from firms such as Vision Capital and Catamount Capital, the company set about building its own network and other operations--but remained low key and below the press radar. In November of 1997, the company tied up with Northern Telecom to build out a DSL infrastructure in Manhattan. "Press releases do not mean anything unless you have a service, so we stayed quiet until we had an actual service to offer," says Kruse.

The company has its work cut out for it because the broadband wars are just beginning. But in round one, Prism has been red-hot.

P R I S M NEWS RELEASE

For Immediate Release

For more information:
Debra Niewald
Prism Communication Services, Inc.
(917) 305-2133
dniewald@prismcsi.net

Bryan Scanlon or Deb Souza
Schwartz Communications, Inc.
(781) 684-6577
bryans@schwartz-pr.com
debs@schwartz-pr.com

PRISM DELIVERS RED-HOT, HIGH-SPEED CONNECTIVITY TO SMALL BUSINESSES

Innovative New RED Service Delivers Lightning-Fast, Always-on Access at 1 Mbps, Enabling Small Businesses and Telecommuters to Use the Internet Easily and Productively

NEW YORK—February 1, 1999—Prism Communication Services, Inc., an advanced telecommunications company formerly known as Transwire Communications, today announced a high-speed service that allows users to download data at speeds normally reserved for big corporate customers. Simply called "**RED**[SM]," this new service is specifically designed for small businesses, home offices, telecommuters and "power" users. **RED** offers always-on, lightning-fast Internet access over existing telephone lines, radically transforming the way users connect and communicate, without rewiring their offices.

RED levels the Internet playing ground, giving small businesses the same sophisticated communications services that large corporations take for granted. At the heart of this new and powerful service is innovative digital subscriber line (DSL) technology. Using digital modems and an advanced Nortel™ network, **RED** customers can download data at speeds of up to 1 Megabits per second (Mbps)—17 times faster than the fastest analog modem (56K) and roughly eight times faster than dual-channel ISDN without any per-minute charges.

"Small businesses need high-speed Internet access, but the T1 and ISDN services available today by traditional carriers are just too complicated and expensive. **RED** gives smaller businesses the speed and simplicity they're looking for at a price they can afford," said Terry Peck, founder and chief executive officer of Prism. "**RED** transforms the way small businesses communicate, empowering them to attract new customers, compete effectively in the digital marketplace and collaborate more effectively with partners. ***RED MEANS GO*** — go get on the Internet quickly, work more productively and go home earlier."

—more—

In addition to providing Internet access at breath-taking speeds, **RED** service offers complete e-mail and web-hosting services, making it unnecessary for customers to continue using their current Internet Service Provider (ISP). And because **RED** is provided on a 24x7, "always on" basis, customers no longer have to go through the frustrating and time-consuming "dial-up" process. With **RED**, customers will never hear a busy signal when they want to go online, because they are online all the time and slow download waiting periods are eliminated. After installation of a new phone line, **RED** users simply plug the 1-Meg digital modem, manufactured by Nortel Networks™, into their telephone jack themselves, and they're ready to go. No service call is required.

Prism Tailors "Big Business Services" for Small Businesses

Since small businesses with smaller connectivity needs do not get the attention they deserve from larger carriers, Prism is dedicated to providing "big business" customer service to the small businesses that use **RED**. Prism provides resolution for all customer inquiries within 24 hours and 24x7 support. To further simplify a traditionally complicated business, monthly charges for Internet access and future voice, video and extranet services will be consolidated onto a single, easy-to-understand bill.

Ron Ben-Israel Cakes (weddingcakes.com) is just one of many small businesses that was looking for ways to improve the way its voice and data communications were handled. Ron Ben-Israel, a celebrated designer of wedding cakes who relies on the Internet to do business, is one of more than 200 Prism customers who used **RED** during recent beta testing. "I used to spend at least an hour a day working online with my old modem, and most of that time was wasted on waiting for files to download," commented Ben-Israel. "With **RED**, what used to take hours now takes minutes. I have more time to take care of my customers and that has an impact on the bottom line."

In the coming months, Prism will also offer a new range of services that, until now, were not available to smaller businesses. Through its partnership with Comdisco, Prism will be able to offer small businesses the most advanced communications services, including equipment leasing and nationwide locations for Internet and extranet hosting. Additional Comdisco offerings, such as automatic storage products and asset management programs, will also be available to Prism customers.

"Prism Communication Services is approaching the small business market with a true marketing focus for their products," said Claudia Bacco, a senior DSL analyst with TeleChoice, Inc. "By focusing on understanding their target market and providing a solution tailored to target customers' needs, Prism is differentiating themselves."

Pricing and Availability

RED is available immediately in New York City directly from Prism, or at select retail outlets, partners, integrators and agents, including: DataVision, J&R Computer, InterSolutions, Manchester Equipment, MetaNet, RCS/Unplug-It, Mien Information Solutions, PC Mania, Simply TV and Skyline Connections.

-more-

Customers may choose from three different always-on, high-speed data connectivity offerings:

- ***RED Res***^{SM}, a 640 Kbps service intended for telecommuters and power users. One static IP address and one e-mail account are included. ***RED Res*** pricing starts at $79.95 a month with a one-year contract or $99.95 a month with no contract.

- ***RED Single***^{SM}, up to 1.0 Mbps downstream service tailored toward home office users and telecommuters that need even more bandwidth for large file-transfers, graphics and other needs. This service also includes one static IP address and one e-mail account. ***RED Single*** pricing starts at $129.95 a month with a two-year contract, $149.95 a month with a one-year contract and $199.95 a month with no contract.

- ***RED Network***^{SM}, up to 1.0 Mbps downstream service designed to provide Internet access to many employees working in small businesses or remote offices. Six static IP addresses and six e-mail accounts are provided. A Cisco1605R router, provided by Prism at no additional charge, is required to connect the customer's LAN to ***RED Network. RED Network*** pricing starts at $299.95 a month with a two-year contract, $349.95 a month with a one-year contract and $399.95 a month with no contract.

About Prism

Prism Communications Services, Inc. is a next-generation communications company with headquarters in New York City. For businesses and individuals alike, Prism is the single source for current and future high-speed data, Internet, video and voice solutions—delivered through the company's advanced digital network. For more information, please visit www.prismcommunication.net or call the company at 212-366-5001. For more information on RED, please visit www.redconnect.net

###

RED^{SM}, *RED Res*^{SM}, *RED Single*^{SM}, *RED Network*^{SM}, *RED 56*^{SM}, and *RED ISDN*^{SM}, are trademarks of Prism Communication Services, Inc., formerly Transwire Communications, Inc.

Summary of Position Regarding Advanced Telecommunications

Prism Communication Services, Inc.
New York, NY

MEASURES TO PROMOTE LOCAL COMPETITION

Copper Collocation

- Require ILECs to allow requesting CLECs to bring copper from the CLEC's point of presence (POP) into the CO.
- The ILECs are refusing to allow copper collocation.
- Without this ability, only the ILECs will be able to offer advanced telecommunications services over copper loops.

Local Loops

- Rules to ensure unencumbered access to the existing copper wire infrastructure.
- Rules to prevent ILECs from taking actions that render the copper useless and rules and standards to simplify access to disenfranchised copper facilities.
- Rules to allow carriers to purchase the lowest cost functional loop available for a given technology and rules to ensure access to "raw" copper loops at the cost applicable to such loops.
- Require ILECs to provide competitive carriers with DLRs for each UNE prior to ordering and implementation.

OSS Issues

- Rules to shorten provisioning intervals
- CLEC access to same information that is available to ILECs
- Effective framework for complaint resolution

RESALE OBLIGATION UNDER SECTION 251(C)(4)

- The resale obligations of section 251(c)(4) should attach to all advanced services marketed by ILECs regardless of whether such services are classified as telephone exchange service or exchange access.

- The dichotomy between telecommunications services and exchange access services in the *Local Competition Order* is inapt in the advanced services context.

- Exchange access services are not fundamentally non-retail in character and thus should be subject to the resale obligations. To the extent an end-user may purchase such services directly from the ILEC, they are in fact retail in character and should be subject to section 251(c)(4).

LIMITED INTERLATA RELIEF

- The Commission must not grant interLATA relief to allow the BOCs to carry packet-switched traffic across current LATA boundaries for the purpose of providing end users with high-speed connections to nearby Internet network access points.

- Allowing such "modifications" undercuts the explicit statutory scheme for allowing BOC entry into the interLATA market, including advanced telecommunications services.

- Congress made its position on this issue quite clear: compliance with the competitive mandates of the Act and section 271 are necessary prerequisites for the regional BOCs to enter the interLATA marketplace.

SEPARATE AFFILIATE ISSUE

Provisioning of advanced services through a separate affiliate

- ILECs should be required to offer advanced telecommunications services through separate affiliates in order to curb the ILECs' anti-competitive practices. ILECs should not be permitted, in any event, to provide services on an integrated basis free from section 251(c) requirements.

Section 251 Unbundling Obligations

- The Commission should also require the advanced services affiliate to offer their advanced services to competitors for resale at wholesale rates in order to preserve the CLECs' statutory right under Section 251(c)(4) or the FCC's plenary power.

SEPARATE AFFILIATE ISSUE

Separations Requirements

- The Commission must uphold the "272-type" separations requirements, but bolster these requirements to make every effort to ensure true separation, including:
  - require a minimum percentage of outside directorships
  - mandate separation between the advanced services affiliate and other subsidiary or affiliate operations of the ILEC
  - prohibit virtual collocation by the affiliate
  - prohibit ILECs from funding or guaranteeing the funding of the operations of its advanced services affiliate.

- The Commission should prohibit all transfers (both "bottleneck and "non-bottleneck" facilities) between the ILEC and its advanced services affiliate. If the Commission adopts a*de minimis* transfer exception, it should apply to the transfer of all assets (equipment, customer contracts, etc.)

CDM operational costs are 40-50% lower than ADSL

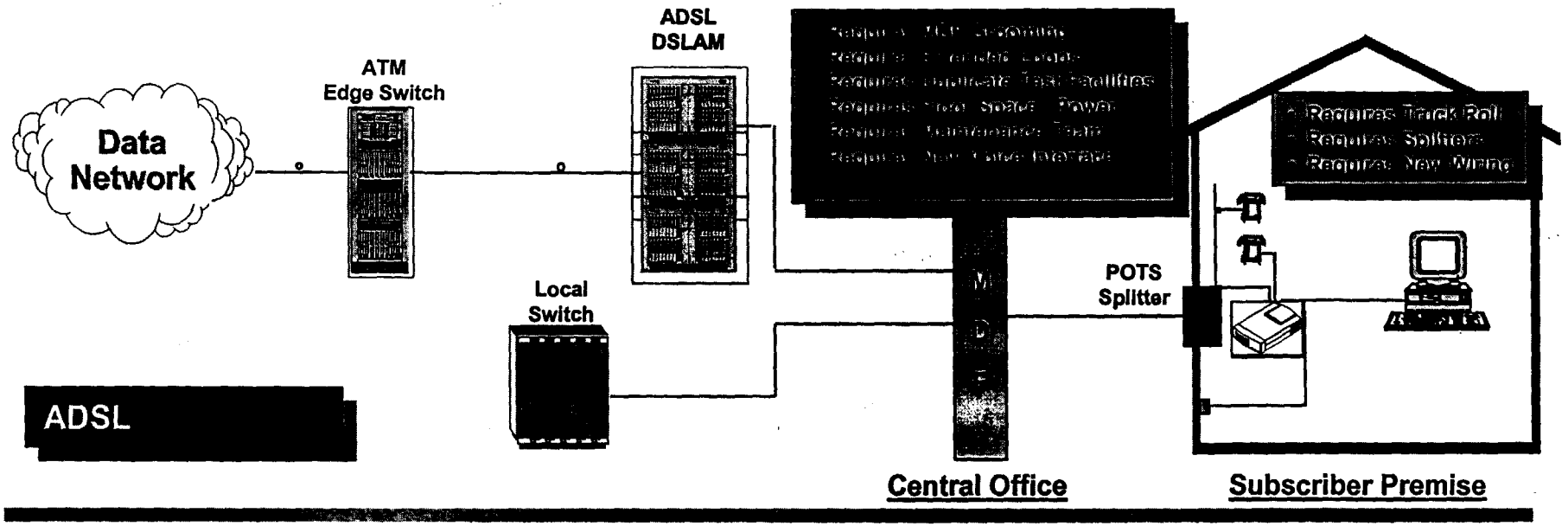

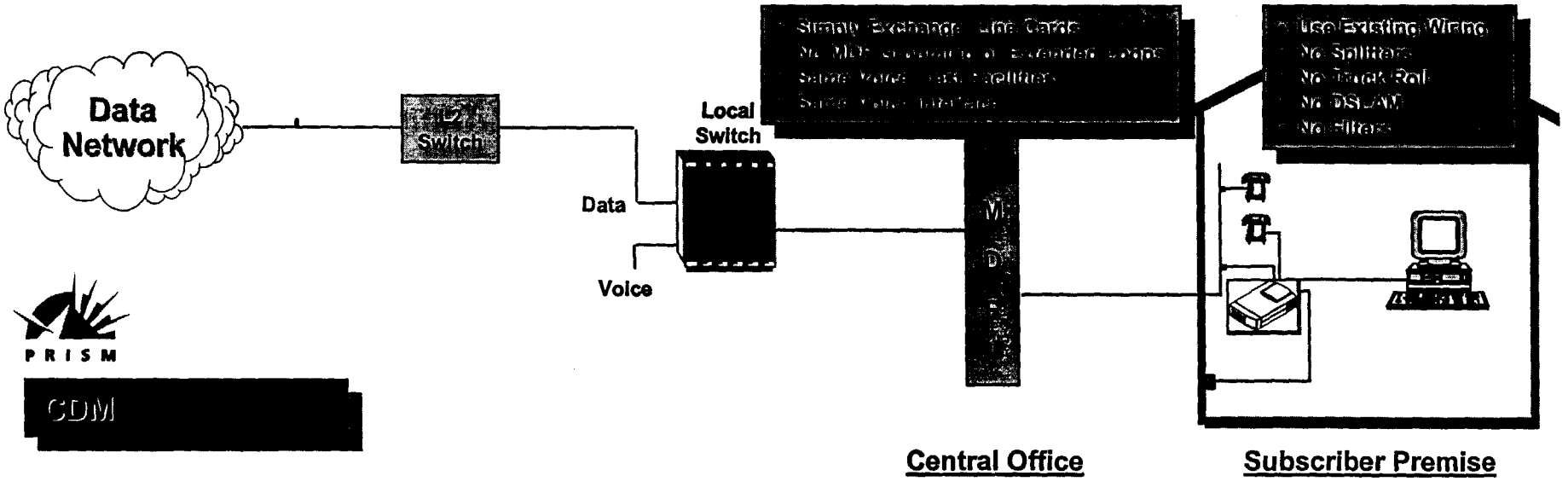

PRISM

Prism Communication Services, Inc.

In response to the 1996 Communications Act, Prism Communication Services, Inc., now a wholly owned subsidiary of Comdisco (NYSE: CDO), was originally formed to provide advanced telecommunication services to meet the exploding demand for bandwidth. The company has committed $350 million to a state-of-the-art, high-speed, digital, meshed telephone and data communications network. The network, presently being deployed in Manhattan, features Nortel Networks™ breakthrough Consumer Digital Modem (CDM™) technology. Unlike ADSL, the Nortel solution serves a mass market by utilizing existing copper wire without the need for splitters, DSLAM bays or filters, but meets comparable performance criteria. This dual voice and data network backbone provides a secure, "always on" connection of up to one Mbps "downstream" to the user and 120 Kpbs "upstream." These speeds are roughly 8 times faster than prevailing dual-channel ISDN products and 17 times faster than popular 56K modems being used today.

RED MEANS GO

17 times faster than 56K

8 times faster than ISDN

www.redconnect.net

1-888-red-2000

PRISM COMMUNICATION SERVICES, INC.

Established in 1997 and headquartered in New York City, Prism Communication Services, Inc., is a next-generation, advanced communication company using leading-edge *digital* modem technology that delivers lightning-fast data and Internet access over standard phone lines.

Prism's RED℠ digital service currently provides small to medium-sized businesses, as well as power PC users, data transmission and Internet access at speeds 17 times faster than the fastest 56K analog modem and 8 times faster than dual-channel ISDN lines.

RED℠ is backed by two of the world's largest telecommunications and technology providers, Nortel Networks™ and Comdisco.® RED℠ high-speed access is delivered via Nortel's 1-meg Digital Modem.

SPEED

The same standard copper telephone wire that has carried voice services for over 75 years actually has plenty of bandwidth to support the current demand for high-speed video, data and Internet access– well beyond today's 56K analog and 128K ISDN services. No one company has tapped into this potential until now. RED℠ provides breakthrough connectivity at 1MB downstream and 120K upstream.

SIMPLICITY

RED℠ combines existing telephone wiring with today's high-speed technology to make advanced communications services as commonplace and easy to use as the ordinary telephone. RED℠ users simply plug the RED℠ modem into an existing phone jack, install an Ethernet card into a PC, and they're off and running.

SERVICE

RED℠ customers will no longer need the services of their Internet service providers (ISP). RED℠ combines high-speed connectivity with ISP functionality for a single-service solution at a fixed monthly rate. RED's "always-on" service connection eliminates dialing in, busy signals and slowdowns. And 24-hour-a-day, 7-day-a-week toll-free customer service provides RED℠ customers with support when they need it.

Service	Maximum Speed In	Maximum Speed Out	Average Monthly Cost	Equipment/ Installation
Dial-up	56K	33K	$19.95	$200
ISDN	128K	128K	$600	$390-460
T-1	1.5MB	1.5MB	$1,200	$390-460
RED*	1MB	120K	$149.95	$299.95

** RED's single-user digital modem service at $149.95 per month. Prices subject to change. Cost estimates based on Manhattan-area service.*

SERVICES AND PRICING

Product	Installation Fee	Month to Month	1-Year Contract	2-Year Contract
Red Res	$299.95	$99.95	$79.95	
Red Single	$299.95	$199.95	$149.95	$129.95
Red Network–Configuration 1	$399.95	$399.95	$349.95	$299.95
Red Network–Configuration 2	$399.95	$399.95	$349.95	$299.95
Red Network–Configuration 3	$399.95	$349.95	$299.95	$249.95
Red Network–Configuration 4	$399.95	$349.95	$299.95	$249.95

AVAILABILITY

RED

1-888-RED-2000