The Walt Disney Company

EX PARTE OR LATE FILED

RECEIVED

APR 09 1999

FEDERAL COMMUNICATIONS COMMISSION
OFFICE OF THE SECRETARY

April 9, 1999

HAND DELIVERED

Ms. Magalie Roman Salas
Secretary
Federal Communications Commission
445 12th Street, S.W., Room TWB204
Washington, D.C. 20554

Re: *Amendment of Section 2.106 of the Commission's Rules to Allocate Spectrum at 2 GHz for Use by the Mobile-Satellite Service, FCC 98-309,* released November 25, 1998 (*Memorandum Opinion and Order, Third Notice of Proposed Rule Making, and Order in* ET Docket No. 95-18) – Written Ex Parte Presentation

Dear Ms. Salas:

On behalf of The Walt Disney Company and its wholly-owned subsidiary ABC, Inc., ("ABC") transmitted herewith for filing with the Commission pursuant to Section 1.1206 of the Commission's Rules are an original and two copies of a written Ex Parte submission that provides the results of technical tests and studies done by Walt Disney Imagineering Research and Development, Inc., along with their conclusions that ABC believes to be relevant to the issues addressed in ET Docket 95-18.

If there are any questions in connection with the foregoing, please contact the undersigned.

Respectfully submitted,

Diane H. Davidson

Diane H. Davidson
Director, Government Relations

cc: BY HAND
Sean White, Office of Engineering and Technology

No. of Copies rec'd 0+2
List ABCDE

1150 17th Street N.W. / Suite 400 / Washington, D.C. 20036 / 202-222-4700 Fax 202-222-4799

Walt Disney Imagineering Research & Development, Inc.

Eric Haseltine, Ph.D.
Senior Vice President and Chief Scientist
Creative Technology

Walt Disney Imagineering Research & Development, Inc.(WDI), part of the Walt Disney Company (TWDC), has over the past year been working closely with TWDC's ABC division and the digital microwave equipment manufacturing industry to investigate and understand the implications of the imminent reduction of the 2 GHz Broadcast Auxiliary Spectrum (BAS). WDI filed comments to the Commission's 3rd notice of Proposed Rulemaking for Docket ET 95-18 which discussed our findings to that time[1]. We also stated in that report that we would continue to investigate the various technical issues involved in these proceedings and file additional comments as testing results were obtained. In this filing, we share our findings about video and audio performance of a conventional analog microwave radio in the presence of adjacent channel interference in a re-channelized band using 12 MHz channels, and further data and observations on additional digital microwave equipment we have tested.

A. Analog Adjacent Channel Tests

In attempting to properly test analog radios' adjacent channel performance in a 12 MHz band plan, we were stalled until a vendor could supply transmitters and receivers that, unlike ABC's own equipment, had agile subcarrier frequencies and could be re-channelized to 12 MHz spacing. This equipment was not obtained until March 1 1999, so these tests could not be performed until after the close of the reply comment period. Ironically, the equipment supplied by the vendor was the same equipment that had previously been loaned to Sarnoff Laboratories for their experiments, which results are shown in Appendix A of the ICO reply comments[2]. In our tests we duplicated many of their tests, yielding very similar data and confirming their results. However, some of the critical data concerning adjacent channel interference presented in their report tables and of great importance to broadcast users of this spectrum were not highlighted either in the discussion or conclusions sections of the report. Specifically:

[1] Disney Comments to 3rd Proposed Rulemaking, Docket ET 95-18 filed February 3rd, 1999
[2] Reply Comments of ICO Services Limited, Docket ET 95-18 filed March 5th , 1999,

Mailing Address: Post Office box 25020 / Glendale, California 91221-5020
1401 Flower Street / Glendale, California 91221-5020 / 818-544-5707 / Fax 818-544-4544

Part of the Magic of The Walt Disney Company © Disney

1. Cases B2 and D2 from Table 6 are of great significance to users of common receive sites. It is our experience that common sites would typically operate with widely varying receive signal levels present simultaneously in all or most channels. The Sarnoff report shows that receiver adjacent channel performance is degraded by 10 dB when the channel spacing is reduced from 17 to 12.75 MHz.

2. The Sarnoff measurements were done at 12.75 MHz channel spacing instead of the anticipated 12 MHz spacing. WDI made extra efforts to obtain radios with 12 MHz spacing. Unfortunately, 12.1 MHz spacing was not possible at this time.

3. The Sarnoff adjacent channel tests were done at a receive level of -31 dBm for the desired signal. Our experience in the broadcast industry shows that this receive level is exceptionally high.

4. No data on audio performance was presented by Sarnoff.

A.I.Test Setup

For WDIs tests, 2 audio subcarriers were used in each of two transmitters: subcarrier 1 was set at 4.83 MHz and subcarrier 2 was set at 5.2 MHz. These subcarriers were chosen because they were the two closest to the end of the low pass filtered video signal and would be subject to the least impairment caused by the passband of the 10 MHz receiver IF filter. A basic reference work on optimum subcarrier frequency location is cited here[3].

Our Test setup for 12 MHz bandwidth channel spacing tests is shown in the diagram below. As stated above we were unable to achieve 12.1 MHz spacing. The only changes for 17 MHz were a change in the radios' oscillators to standard (current) channel 5 and 6 frequencies and use of the medium setting (17 MHz bandwidth) for the IF filter in the receiver.

[3] Johannsen, Paulsen et al.,"Television Sound Subcarrier Transmission in Space Communication", I.E.E.E. Transactions on Broadcasting. Vol BC-20 3rd Sept, 1974.

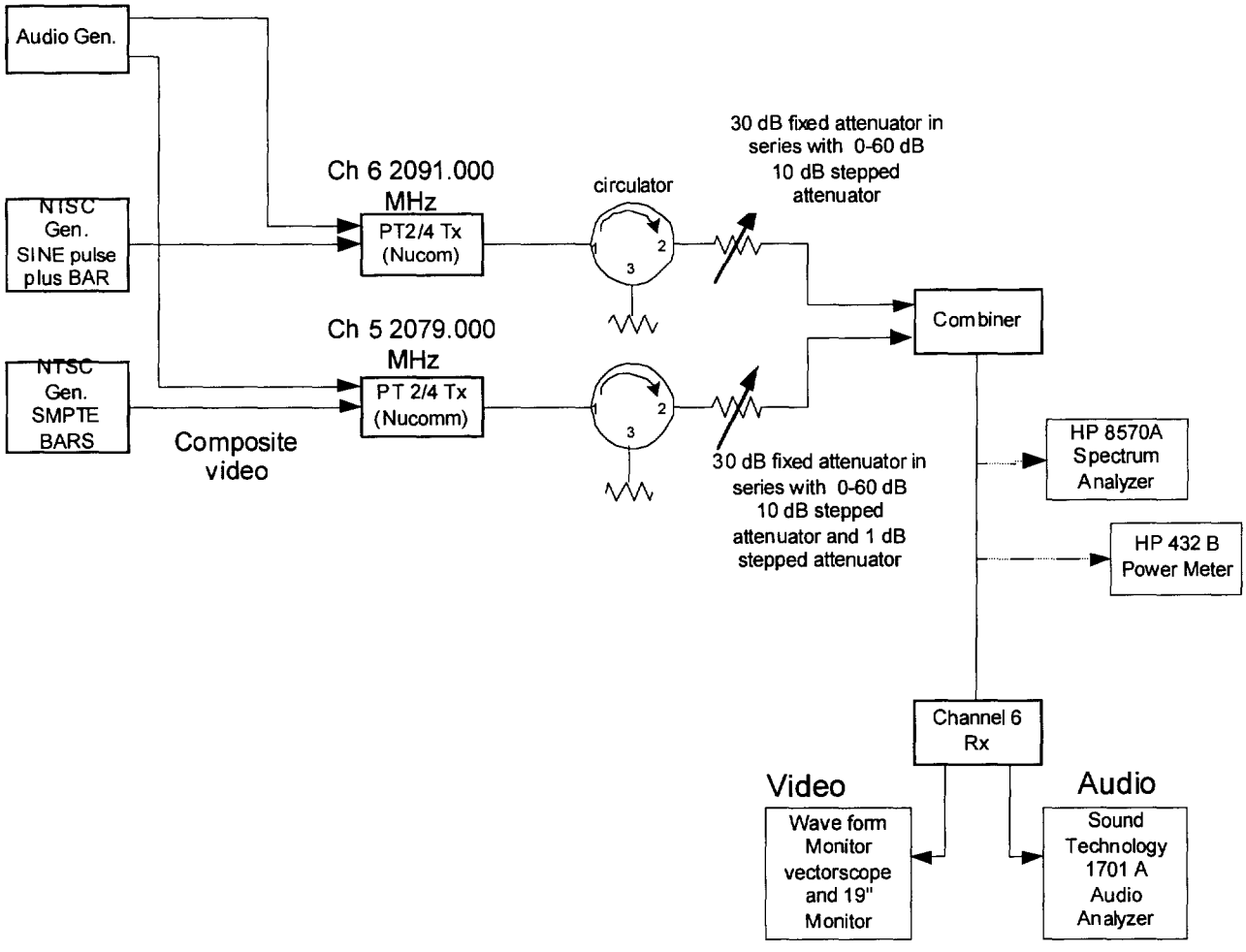

Figure 1 Adjacent Channel Test Setup (Lower into Upper)

A.II. Performance of a 12 MHz Channelized Radio with No Interference:

In this first series of tests, the performance of a single radio that was adjusted for reduced bandwidth was tested. The radio was set on channel 6 (2091.000 MHz). The peak deviation was set for 3 MHz with a one-volt video input signal. Both audio channels were fed a + 8 dBm audio signal at a frequency of 1 kHz. The peak deviation was set to 150 kHz. The sub carrier levels were set 26 dB below the level of the video carrier as per the manufacturers setup procedure and as observed on a Hewlett Packard 8570A spectrum analyzer. Video output was monitored on a waveform monitor and vector-scope. It was also observed on a 19" video monitor. The demodulated audio's Total Harmonic Distortion (THD) was measured with a Sound Technology 1701A audio test measurement set. Transmitter output power and accuracy of the attenuators was checked with a Hewlett Packard 432B power meter. This was necessary because the front panel signal level meter of the receiver either was not accurate or was not calibrated. The receive

level was adjusted in 10 dB steps. The receiver filters were the standard front-panel-switchable IF filters installed in the NUCOMM rack mount receiver.

The results of the measurement of one transmitter-receiver pair through the test setup is shown in table A.II.1 below.

Table A.II.1 Tests of one radio through both "Narrow" 10 MHz IF and "Medium" 17 MHz IF Filters:

	Narrow		Medium		
Rx level	Audio Performance (THD)		Audio Performance (THD)		Video Performance (JNI)
	Sub1	Sub2	Sub1	Sub2	
-44 dBm	0.6%	0.48%	0.6%	0.35%	
-54	0.6	0.48	0.6	0.35	
-64	0.63	0.5	0.63	0.4	
-74	1.1	0.9	1	0.8	Some Noise
-84	Off scale	Off scale	Off scale	Off scale	Noisy image but still acceptable

Notes:

- 20 IRE of noise in the video at –84 dBm
- 7.5 IRE of noise in the video at –74 dBm
- 1.2 IRE of noise in the video at –64 dBm
- The selection of the IF filter used (Narrow or Medium) affected audio sub carrier 2, but no significant change in the video was observed.
- At –74 dBm, we passed the threshold of Just Noticeable Interference (JNI) for video. The Audio distortion should be compared to the February 1990 EIA RS 250C limit of 0.5% distortion.
- At –84 dBm, there was degradation of the video and very severe degradation of the audio.
- When subcarrier-2 was not modulated or when it was turned off, it did not influence the distortion readings of subcarrier-1. Similarly, when subcarrier-1 was removed, it did not affect subcarrier-2.

A.III. Performance of a 12 MHz Channelized Radio with Adjacent Channel Interference at 12 MHz Channel Spacing:

For these tests two transmitters were used.

Radio1, which was the interferer, was transmitting on CH5 (2079.000 MHz). The modulating signal was SMPTE Color bars at a 1-volt level and 1 kHz audio at a +8 dBm input level. The audio was fed on subcarrier-2 only. Subcarrier-1 was on, but not modulated. The radio was set for 3 MHz peak deviation with 1 Volt of video and the audio subcarriers were set for 150 kHz peak deviation with + 8 dBm of audio at 1 kHz.

Radio2 was transmitting on CH6 (2091.000 MHz) 12 MHz higher than channel 5. A Sine Squared Pulse plus Bar signal was fed into the video input at 100% APL. The two audio subcarriers, subcarrier-1 and subcarrier-2 were both fed a 1.0 kHz tone at +8 dBm input level. Deviation was set the same as radio 1. The reason the Sine Squared Bar video test signal was used for this transmitter was to be able to see the imprint of the SMPTE Color Bar signal into this signals white field.

In all the adjacent channel tests, the narrow filter setting was used in the IF of the receiver. Although this filter causes slightly increased distortion of the second audio subcarrier, as demonstrated above, it was necessary to use the narrow IF filter for best adjacent channel rejection of the interfering signal. Ideally, a 12 MHz Surface Acoustic Wave (SAW) filter should be used, but one was not available at the time the tests were performed.

We ran the tests at three receive signal levels of -40, -50 and –59 dBm for the interfering signal, and progressively lowered the level of the desired transmitter with respect to the undesired, to measure adjacent channel rejection in these different interference environments, to compare with the interference rejection of the radios adjusted for the present 17 MHz channel allocations.

As Radio-1 was the interferer, the performance measurements were made on the signal transmitted by Radio-2. We operated Radio-1 on the lower channel as it has been shown to be a greater interference factor than the upper adjacent due to the asymmetrical nature of the video signal. The THD of the two audio subcarriers were logged and the video output of the receiver was observed on a waveform monitor and a 19" video monitor. The RF level of the desired transmitter was decreased in one-dB steps relative to the interferer to simulate increased distance to the common receive point.

One element not in the Sarnoff link budget calculations was the distance between the receive antenna and the actual receiver. The two elements are typically interconnected with Andrew LDF4-50A, which has a loss at this frequency of approximately 3.5 dB/100 feet

A.III.1 Adjacent 12 MHz channel testing with interfering radio1 fixed at –40 dBm:

The -40 dBm starting level was chosen because it is the level at which these radios are normally tested for quality control. The results are shown in table A.III.1

TABLE A.III.1 Adjacent 12 MHz channel testing with interferer radio1 fixed at –40 dBm:

Rx Level		Audio(THD)		Video (JNI)
Radio1	Radio2	Sub1 4.83 MHz	Sub2 5.2 MHz	
-40dBm	-40dBm	0.62%	2.4%	
	-41	0.63	4.5	
	-42	0.66	6	
	-43	0.74	8.5	Some flickering
	-44	0.9	9.5	Some distortion
	-45	1.3	10.5	"
	-46	1.9		"
	-47	2.3		Image slightly shaking
	-48	3.3		"
	-49	4.0		"
	-50	5.4		Image shaking, interferer image bleeding on
	-51	6.5		"
	-52	7.5		Black lines on video
	-53	9		"
	-54	>10	27	Impaired picture

Note:

- Results obtained with the character generator ID of the SMPTE Bars generator turned off. It was observed that the characters, when on, caused impairments to the video and even smaller D/U ratios.

A.III.2 Adjacent 12 MHz channel testing with the interferer radio 1 fixed at –50 dBm :

The tests were repeated starting at a -50 dBm receive level. This level is more representative of a strong signal at a typical ENG receive site.. The results are shown in table A.III.2

TABLE A.III.2 Adjacent 12 MHz channel testing with the interferer radio 1 fixed at –50 dBm :

Rx Level		Audio(THD)		Video(JNI)
Radio1	Radio2	Sub1 4.83 MHz	Sub2 5.2 MHz	
-50dBm	-50dBm	0.62%	5.5%	
	-51	0.68	7	
	-52	0.8	8.3	
	-53	0.9	10	Image slightly shaking
	-54	1.3	12	"
	-55	2	13	"
	-56	2.7	15	Interferer image bleeding on
	-57	3.8	16	"
	-58	4.5	19.5	Black lines on video
	-59	6.1	21	"
	-60	8	23	Impaired picture
	-61	9.2	28	"
	-62	11	30	"
	-63	13	Off scale	"
	-64	17		"
	-65	20.5		"

A.III.3 Adjacent 12 MHz channel testing with the interferer fixed at –59dBm:

Receive signal levels of -60 dBm are very typical levels for operations within 10 miles of an ENG receive site. Table A.III.3 shows results of adjacent channel interference with the interfering signal set at -59 dBm.

TABLE A.III.3 Adjacent 12 MHz channel testing with the interferer fixed at –59 dBm:

Rx Level		Audio(THD)		Video
Radio1	Radio2	Sub1 4.83 MHz	Sub2 5.2 MHz	
-59dBm	-59dBm	0.6%	5.5%	
	-60	0.7	6.8	
	-61	0.9	8.6	
	-62	1.3	10.5	
	-63	1.9	11	Image slightly shaking
	-64	2.5	12	"
	-65	3.5	13	"
	-66	4.3	14.5	"
	-67	5.5	15.5	Distortion and black lines
	-68	6.5	17	"
	-69	8	20	"
	-70	9.5	22.5	"
	-71	11	25	"
	-72	14.5	27.5	"
	-73	17	30	Unusable picture

A.IV. Adjacent channel testing with 17 MHz spacing:

For this series of tests, the two transmitters and one receiver were reset to current standard 17 MHz wide 2 GHz BAS channels and the modulation readjusted for 4 MHz peak deviation with one volt of video. The audio sub carriers were set for 150 kHz peak deviation with + 8 dBm of audio at 1 kHz. This is the normal radio setup for 17 MHz wide channels. The Medium IF filter setting on the receiver was used. The equipment setup was the same as used for the group II tests above. In the first test -32 dBm was used to repeat the case 4B results in the Sarnoff adjacent channel tests. The Sarnoff report said that the Just Noticeable Interference (JNI) threshold point was with a 17 dB D/U ratio. Ours was 12 dB. The difference may have been in the use of the Bar signal for our desired channel video. This signal makes it easier to see artifacts rather than using identical SMPTE Bars on both the desired and interferer radios. The results are shown in table A.IV.1

TABLE A.IV.1 Adjacent 17 MHz channel testing with the interferer at –32dBm:

Rx Level		Audio(THD)		Video(JNI)
Radio1	Radio2	Sub1 4.83 MHz	Sub2 5.2 MHz	
-32dBm	-32dBm	0.14%	0.12%	
	-33	0.14	0.17	
	-34		0.18	
	-35		0.19	
	-36		0.21	Image slightly shaking
	-37		0.22	"
	-38		0.25	"
	-39		0.27	"
	-40		0.3	Appearance of artifacts. Perceptible interference.
	-41		0.31	"
	-42		0.35	"
	-43		0.4	"
	-44		0.6	"
	-45		1.45	"
	-46		2.45	"

Notes:

Channel one subcarrier audio's THD was not re-checked at each step as results were similar or better than those obtained in the narrow band test performed in section I.

A.IV.2 Adjacent 17 MHz channel testing with the interferer at –42 dBm:

The tests were repeated with the interfering radio set to a -42 dBm level. Because we only had one 1 dB step attenuator available to us on the test day, we could not exactly match the level to the -40 level used during the group III tests. We anticipate similar results if the power had been 2 dB greater. The results are shown in table A.IV.2 Again subcarrier-one THD was not measured because its performance was as good or better than those readings obtained in section I. The D/U ratio at the Just Noticeable Interference was 11 dB.

TABLE A.IV.2 Adjacent 17 MHz channel testing with the interferer at –42 dBm:

Rx Level		Audio(THD)		Video(JNI)
Radio1	Radio2	Sub1 4.83 MHz	Sub2 5.2 MHz	
-42dBm	-42dBm		0.16%	
	-43		0.18	
	-44		0.20	
	-45		0.22	
	-46		0.23	
	-47		0.25	
	-48		0.28	
	-49		0.31	
	-50		0.35	
	-51		0.4	
	-52		0.45	
	-53		0.68	Distorted video, perceptible noise.
	-54		1.4	"
	-55		2.7	"

A.IV.3 Adjacent 17 MHz channel testing with the interferer at –52dBm:

The tests were repeated with the interferer set to a -52 dBm level which would be a strong signal at an ENG receive site. The results are shown in Table IV.3. In this case our D/U ratio at the point of just noticeable interference was 9 dB.

TABLE A.IV.3 Adjacent 17 MHz channel testing with the interferer at –52dBm:

Rx Level		Audio(THD)		Video
Radio1	Radio2	Sub1	Sub2	
-52dBm	-52dBm		0.21%	
	-53		0.23	
	-54		0.25	
	-55		0.28	
	-56		0.3	
	-57		0.34	
	-58		0.36	
	-59		0.39	
	-60		0.45	
	-61		0.65	Video slightly shaking
	-62		1.0	"
	-63		1.8	Unusable video

A.IV.Conclusion

In centralized common receive sites, where "all-channels-in-use-simultaneously" scenarios are common, the receive signal levels on adjacent channels will usually be greatly different from each other. Currently, the weaker signal level channels can be used with little video or audio degradation when their levels at the receiver are within 9 dB of the stronger adjacent channel. Other improvement factors (such as antenna polarization) increase this ratio farther, and may be assumed unchanged for this analysis. Bottom line: this works most of the time. With re-channelization to 12 MHz spacing and no other factors altered, our tests show a degradation in the D/U ratio of 6 dB, leaving only a 3 dB margin. This loss will clearly restrict the capability of all-channels-in-use operation; in our experience in broadcasting, this should be enough to change scenarios from "works most of the time" to "usually does not work." This loss in adjacent channel interference margin must be mitigated somehow.

The report produced by the Sarnoff Laboratories did not include audio quality test data, so degradation of the second audio subcarrier in 12 MHz channelization went unnoticed or unreported. Our tests of second audio subcarrier response in 12 MHz channelization

show unacceptable distortion due to adjacent channel interference even with the narrow 10 MHz receiver filter at even low levels of interference. Second audio subcarrier is thus rendered useless for audio, a serious detriment for some programming uses (stereo, second language, sports field production, etc.). We did not address whether second audio subcarrier would remain viable for telemetry uses under these circumstances.

In order to mitigate the losses, several suggestions may have merit.

Antenna cross-polarization of adjacent channels could add rejection by the cross-pol rejection factor of the antenna. To use this factor, it might be necessary to replace some antenna systems with new antennas with switch-selectable polarization in order to retain all channel operational agility. Also, the effectiveness of this technique is reduced by the presence of strong reflections especially in dense urban environments, and it will not add advantage in markets where it is already in use. Because of the de-polarization that can occur on a non-engineered ENG path, the cross-pol rejection may be less than the cross-pol isolation of the receive antenna.

Better transmit/receive filters. There are two approaches to this issue. One could redesign the first stage of the radio. Most receivers in this band are dual conversion. By narrowing the first IF filter from 30 MHz (typical for current receivers) to 15 MHz more adjacent channel energy can be kept out of the latter stages of the radio. In addition to this, one could attempt to improve the second IF filter to a sharp cutoff constant group delay filter of 10.5 to 11 MHz. External transmit and receive channel filters are already in common use in many markets; these filters must be replaced for new channelization.

Another mitigation technique would be to use space diversity: Construction of additional receive locations around the central market area to provide a choice of receive locations for most possible program origination points in the market, such as has been implemented in the Los Angeles market. This is probably the most expensive solution due to costs of real estate, tower structures, additional facilities for backhaul to the studios, etc., for the new locations.

In markets where some of these solutions have already been implemented to mitigate problems caused by present adjacent channel problems and PCS transmitters, these solutions cannot recover additional narrow-banding loss.

Perhaps the most significant improvement could be obtained by implementing DC coupled modulators such as are currently in use in the satellite industry, but do not appear to be in use in any of the ENG equipment we have seen to date. The available improvement is as discussed in reference[4]. This would call for a redesign and possible replacement of transmitters, depending on the severity of the required modifications.

[4] Austrailian Broadcasting Corporation, "Peak levels in a PAL signal after pre-emphasis to CCIR Rec. 405-1", ABU Technical Review, March 1984, Page 3

Split-channel (offset) operation, the most drastic yet easiest solution available today as most equipment is presently capable of using it, will not exist for analog systems in narrow channelization. Markets (such as Los Angeles) where 7 channels are simply inadequate now and offset has been used with some of the above techniques to create additional overlapping narrow-band channels, may be forced to implement digital, which will be capable of reduced channel bandwidth operation (though at reduced picture quality and higher cost). Adjacent channel rejection of digital radios is, as yet, generally unknown.

Wider than 12 MHz channels would also be a significant help. In the event wider channels were considered by the FCC, it would be enlightening to repeat at least some of these tests to determine the available level of improvement from guard bands between channels.

It would also be helpful to retest with different shape and width receiver IF filters, which were not available to us to test.

B. Digital Microwave Tests

As word has gone out that we have been testing various modulation schemes that could be used in next generation digital microwave equipment, manufacturers have contacted us to test their systems. Two of those systems that we have tested since our last report are an 8VSB modulator from Zenith and a COFDM unit from NEC.

B.I. Equipment and Settings

B.I.1. Platforms and Antennas

The platforms and antennas used were identical to those described in our previous report. In addition to using the van as a stationary platform, we also used it as a moving platform for the COFDM test. For that test we used a 3 dBi gain omni antenna as the transmit antenna located on the roof of the van.

B.I.2. Digital Coders and Modems

For the 8VSB test a prototype Zenith HDTV 8VSB modulator and demodulator/decoder was used. The source video was high definition footage pre-compressed to a distribution quality 19.36 Mbps MPEG-2 bit stream that was stored in an internal hard disk drive and played in an endless loop. This modulated MPEG-2 bit stream was output on a 70 MHz IF carrier and connected to the NUCOMM digital radio. The occupied bandwidth of this unit was standard terrestrial DTV 6 MHz.

For the COFDM test a NEC COFDM modulator and demodulator was used. This unit was an integral transportable field unit used in Japan. As the Japanese market uses different spectrum for ENG, the modem was again interfaced to the NUCOMM digital radios via a 70 MHz IF link. The units had integral MPEG-2 encoder/decoders operating at fixed bit rates of 8, 10.66, 12, 14 and 16 Mbps that were locked to corresponding front panel error correction selections of _, 2/3, _, 7/8 and no error correction. The units were designed for the Japanese market to operate in 9 MHz channels. The COFDM modulation scheme used in these units employed a 544-carrier system with DQPSK modulation of the carriers.

B.I.3. Radios

In addition to the analog radios described in the previous report we also used Digital radios from Nucomm. The FT/FR 6 Digalog radios are fixed frequency heterodyne digital-analog radios that are capable of transmitting and receiving analog with optional analog modulators or compressed digital bit streams through the included 70 MHz IF interface.

B.II. Stationary Test and Results

B.II.1 Test Setup

In these tests we positioned our stationary platform at a distance of 19.5 miles from our receive location. From this position we first established an analog link and transmitted a test tape played out of a Betacam SP player to our receive site. We then transmitted over the same path without changing the antenna positioning the digital 8VSB signal and recorded the down-converted high definition distribution quality signal on to a Betacam SP tape. On a different day we repeated this test with the COFDM unit. For the COFDM unit we used the same test tape as the analog tests. Figure 2 and 3 show the test setup configuration for each case. The test results for 8VSB are shown in table B.II.1 COFDM results are recorded in table B.II.2.

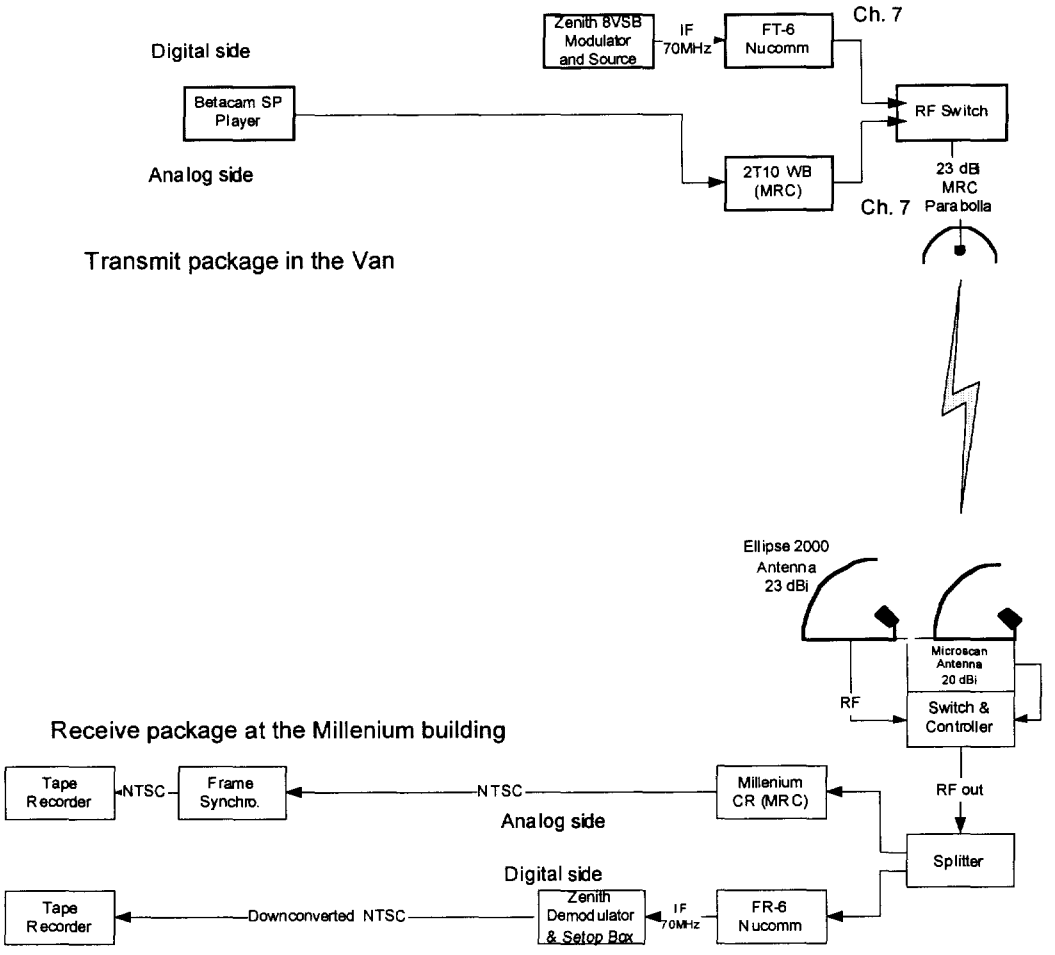

Figure 2 8VSB Setup for Stationary Tests

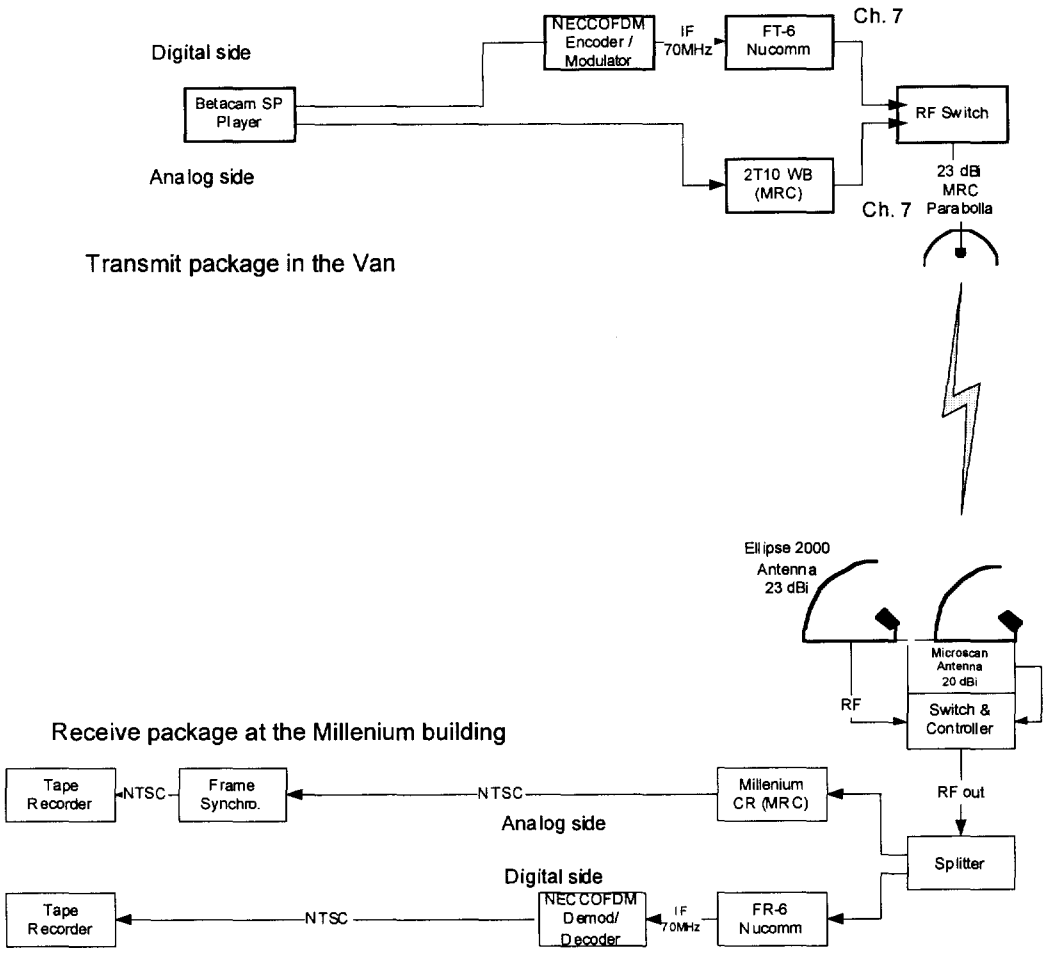

Figure 3 COFDM Setup for Stationary tests

Table B.II.1 8VSB Test:

Date: 2/2/98	XMIT Location: Milton Harbor, CT			RCV Location: Millennium Building Roof 101 W 67 Street, NYC			Distance: 19.5 miles	Weather: Partly Cloudy Visibility clear to horizon
Rcv Antenna: 23dBi Parabola	Noise floor clear channel: -90dBm			Rcv Ant. Elevation / Azimuth: 20/16 deg magnetic				
Test #	**Settings**	**Channel Bandwidth**	**Rcv signal level**	**Rcv log tape segment**				**Comments**
Test-1	Analog	17 MHz	-70.1dBm	00:00:00- 00:10:00				OK
Test-2	8VSB 19.36Mbp s	6 MHz	-72.3dBm	N/A				No errors

Table B.II.2 COFDM Test:

Date: 3/2/98	XMIT Location: Milton Harbor	RCV Location: Millennium Building Roof 101 W 67 Street	Distance: 19.5 miles	Weather: Partly Cloudy Windy 20-35mph. Visibility clear to horizon
Rcv Antenna: 23dBi Parabola	Noise floor clear channel: -90.1 dBm	Rcv Ant. Elevation / Azimuth: 20/16 deg magnetic		

Test #	Settings	Channel Bandwidth	Rcv signal level	Rcv log tape segment				Comments
Test-1	Analog	17 MHz	-68.3dBm	00:00:00-00:17:00				OK
Test-2	COFDM 8Mbps _ FEC	8.5 MHz	-71.3dBm	0020:00-00:38:00				Did not work for 5 minutes then stabilized and started working Moved antenna 20 degrees till signal level dropped to –86dBm then we get errors Put in LNA 12 dB gain works upto –76dBm at 26 degrees off axis
Test-3	COFDM 12Mbps 3/4 FEC	8.5 MHz	-71.3dBm	00:40:00-00:58:00				OK Moved antenna until -83.5dBm then received errors
Test-4	COFDM 14Mbps 7/8FEC	8.5 MHz	-70.3dBm	0059:00-01:04:00				OK Moved antenna 9 degrees level dropped to –82dBm then we got errors
Test-5	COFDM 16Mbps 0FEC	8.5 MHz	-70.3dBm	0020:00-00:37:00				OK Moved antenna 7 degrees level dropped to –80dBm then we got some errors

B.II.3 Conclusion and Notes on Stationary Tests

Although comparing different systems in different bandwidths is like comparing apples to oranges, these tests show that all the systems tested worked more or less as designed. The NEC COFDM system had some problems locking to the transmit signal. We later discovered that this was due to it being very sensitive to frequency stability. When the NEC systems were hooked up back to back they worked fine indicating that they were not happy with the frequency stability provided by the radios. As the NEC system was designed to work with their radios designed for the Japanese market which operate at 850 MHz, half the frequency compared to the US radios, the percentage stability they require has to be tighter.

One observation that can be deduced from this test is that the 8VSB system has successfully transmitted the most bits in the least amount of bandwidth to date in our tests. To us this high bit rate transmission capability is imperative as in future years the broadcast industry will require even higher bit transmission rates in order to successfully transition to DTV and HDTV (See Section B.V. HDTV in 2 GHz below for more details). NDS claims its COFDM system can operate at these higher bit rates, but we were not able to test them successfully for our last report due to limitations in available power. We plan to compare VSB to COFDM at corresponding bit rates at a later date if it becomes possible.

B.III. Moving Platform Test and Results

B.III.1 Helicopter Tests and Results

B.III.1.1 Test Setup

In this test sequence we wanted to see how well the 8VSB modulation scheme worked in an environment where dynamic multipath was present. As we had done in our previous dynamic multipath test, we installed the 8VSB package into our portable setup and temporarily mounted it in the WABC helicopter, Chopper 7. As it is very difficult to create the same path on two successive occasions in this helicopter test, we temporarily coordinated a second channel for the duration of the test and used it to transmit an analog signal as reference, also as done previously. Also complicating the test setup was that the 8VSB package had a built in pre-encoded distribution quality high definition video source. We opted to record this material at the receive site from the down-converted high definition output of the decoder to a Betacam SP tape recorder that was syncronized to the second video recorder that was recording the analog camera output of the helicopter. We later post-produced the tape to show both video signals side by side on a split screen. Although this test does not show comparative picture quality as the sources are of different resolutions, it clearly shows the signal reception performance of each system. Figure 4 shows the test setup.

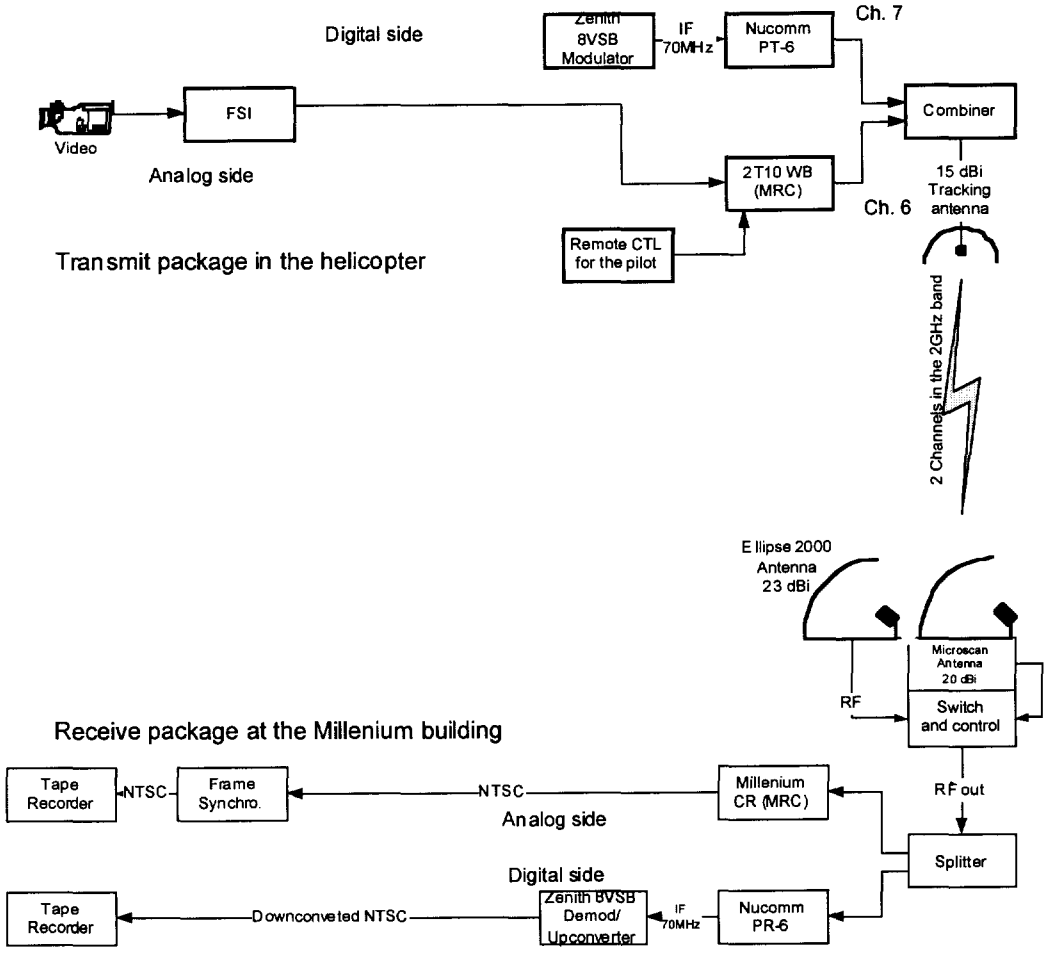

Figure 4 8VSB Helicopter Setup

The analog signal was transmitted on channel A6 (2076-2093 MHz) while the digital 8VSB signal was transmitted on channel A7 (2093-2110 MHz). During the entire test sequence, a distance of 6 miles or less separated the helicopter from the fixed receive site.

B.III.1.2 8VSB and Analog from Helicopter Test Tape

This test tape, case-1, shows a split screen between an Analog FM system using a NTSC helicopter mounted camera as a source occupying a bandwidth of 17 MHz and an 8VSB digital system using internal MPEG-2 HDTV footage as a source utilizing a data bit rate of 19.36 Mbps occupying a bandwidth of 6 MHz.

B.III.2 Van in Motion Tests and Results

B.III.2.1 Test Setup

As the manufacturers and we have been gaining more experience with the various capabilities of these digital systems, we have, through experimentation, found that to best show the abilities of a COFDM system, an omni directional transmit antenna should be used. Although coming at the expense of loss of transmit antenna gain and negative impacts on channel re-use, the many reflections created by an omni antenna allow COFDM systems to work in dense urban environments where the transmit antenna is in motion and completely blocked from the receiver from time to time. As the COFDM system sums all the reflections it receives; when it is operating on reflections as opposed to a direct signal, the more the reflections, the better it performs. There are other benefits from using an omni antenna: A transmit mast may not be needed allowing news crews to rapidly set up, images can be transmitted from a moving platform such as a van without a human or mechanical pointing system, and news vans can be reduced in size as a large foot print to support the height of the mast may not be needed. As the performance of an analog system in a test with an omni transmit antenna is predictable and unusable due to all the reflection, we wanted to see how a single carrier QPSK modulation system would compare to a multi-carrier QPSK (COFDM) system. Further, we wanted to experiment with a 90 degree pattern sector scan receive antenna to see if by utilizing it the steering effort of the receive antenna could be kept to a minimum. At times when the Sector-scan antenna did not provide enough gain to get the systems to work, we switched over to the higher gain Micro-scan antenna. If there still was not enough gain to receive a signal we turned on the LNA in the sector scan antenna as a last resort.

In order to best test these variables we decided to modify our dynamic multi-path test setup to include the van as a mobile platform. We installed an omni antenna on the van and installed a camera next to the driver's seat. To simplify the coordination required for securing two channels during our tests, we opted to use a single channel and define a course that we could repeat successively without introducing too many variables in the test setup.

Our course for this setup was driving down 5th Avenue from 110th Street to 62nd Street. We would then travel east one block to Madison Avenue and continue the loop until we got back to our start position. The first run was using the COFDM system, the second using the single carrier QPSK system. In both systems we used the same MPEG bit rate of 8 Mbps (We found out after the tests that the 8 Mbps claimed on the NEC unit included the outer Reed-Solomon error correction of 188/204 so in earnest the data rate of the NEC system was 7.439 Mbps) and the same _ forward error correction. The occupied bandwidth was different as the NEC COFDM system utilized a steeper sloping factor and included the outer Reed Solomon coding in its advertised bit rate.

While testing the COFDM system we also reduced the amount of error correction, increasing the data bit rate, but keeping the bandwidth constant as forced by the controls of the modulator, to see if better throughput could be achieved with lower error correction.

Later in the test we moved the van to a distant location cross town at the United Nations and compared the performance of the systems. We also switched briefly to the analog system to get a comparison of all three. While the van was stationary we also altered the alignment of the receive antennas to measure worst case performance in low signal conditions.

The test setup is shown in Figure 5

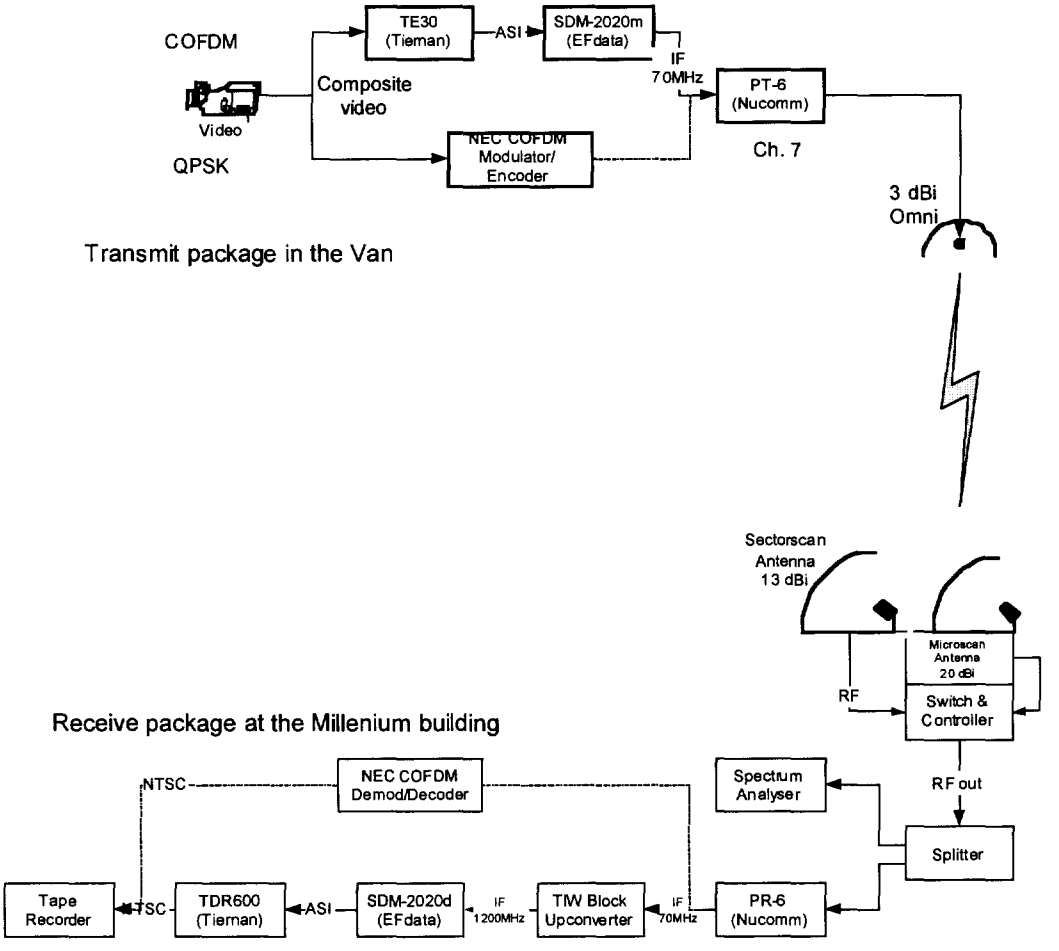

Figure 5 Van as a Mobile Platform

B.III.2.2 COFDM and QPSK from Van in Motion Test Tape

This test tape, case-2, shows a split screen of a camera mounted to a moving van using a Digital COFDM system with a data bit rate of 7.439 at _ inner error correction occupying

a bandwidth of 8.5 MHz and a QPSK digital system with a data bit rate of 8 Mbps at _ inner error correction occupying a bandwidth of 10.4 MHz.

B.III.3 Conclusion and Notes on Moving Platform Tests

In Case–1 we compared how 8VSB as a modulation scheme compared to Analog FM in a mixed, line of sight/weak dynamic multi-path scenario created by transmitting a signal from a helicopter at distances that varied from about _ mile to six miles. The helicopter was stationary at times and in motion at other times. On the analog side, the output of the helicopter mounted camera was pointed to the receive site and was recorded so one can see how the analog and 8VSB signal fared in each circumstance.

In general as long as line of sight was available, each system performed fine. When blocked by obstructions the analog signal would get noisy and the 8VSB signal would freeze frame or show an MPEG error artifact that would clear up quickly after line of sight was re-established. The 8VSB system was able to handle the minor dynamic multi-path that was evident in some of the analog FM footage. As both the transmit antenna and receive antenna are steered directional antennas with line of sight in most cases, the multi-path generated and received in this test was minor. We plan to test the Zenith system in the future when they make available to us their high-end modulator that has more robust lower rate 2 and 4 VSB modes to see how it fares in a more severe multi-path environment.

In general we were impressed that the 8VSB system at these higher bit rates worked at all in this test. As stated above we would prefer a more robust lower data rate mode when using a system in this kind of an environment where the signal quality continuously changes.

In Case-2 we first tested how the NEC COFDM system performed in a severe dynamic multi-path environment. We also compared how well single carrier QPSK compared to COFDM in this instance. This is the case where COFDM performs extremely well. For the duration of the test we had a usable picture in most instances. The only time the signal was spotty was after the van was traveling on Madison Avenue above 75th Street. This is where the buildings on both side of the avenue are high and it appeared from our observations of the spectrum analyzer that we were signal strength limited. Although we had 3 dB more power from our radio as compared to our last test of the NDS COFDM system we lost the benefit of the extra power by using the omni antenna instead of the 15 dBi directional antenna. Our power output from the radio was 4 watts. We also tried reducing the amount of error correction. As however the system did not work all the time with _ error correction, it even worked less with less error correction, so we moved the error correction back to _ for the duration of the test.

On our way to the stationary site at the United Nations we kept on transmitting as we traveled cross-town on 52nd Street. We received usable video signals in many parts of the course all the way to Third Avenue by pointing our 20dBi micro-scan receive antenna west in the direction of New Jersey where we were picking up only reflections, as this complete course was blocked from view of the receive site.

The single carrier QPSK system did not fare as well in the severe dynamic multi-path test. As soon as the vehicle would come to a stop a picture would appear indicating that most of the time it did not have any problems with the static multi-path, but with the time-variant multi-path. During most of the in motion segments the video was unusable. Later when we were stationary at the United Nations location, we experimented with different transmit and receive antennas pointed in various directions to create receive signals with a variety of ailments as could be seen on the spectrum analyzer. We wanted to see how each system handled these impairments. We noted that the EFDATA single carrier QPSK system had a 3 dB better threshold than the NEC COFDM system and would still receive a picture when it was below the threshold of the COFDM system. As far as static multi-path was concerned, as long as it was not severe (no more than 3dB in dips), the EFDATA QPSK system worked just as well as the NEC COFDM system. One has to remember though that in most of these tests we were using the digital systems with _ error correction, a rather large amount of error correction indicating that every data bit transmitted had a corresponding error correction bit.

When we were in the stationary position we also compared both digital systems to analog FM. In this test our heavily error corrected digital systems almost always produced a better picture with perfect quality audio. The exception was a single bounce shot with a circular polarized antenna pattern where the strong receive signal level enabled the analog system to have a better video signal to noise ratio.

B.IV. Overall Conclusion on Digital Tests:

We have to date tested various digital microwave equipment with differing modulation schemes and in various stages of their product development cycles. All have their merits and it is premature to single out any one as a better overall system. While some excel in situations where dynamic multipath is prevalent, others may work better where bit density is the most important factor, yet others where cost is the driving factor.

The following are some of the categories that we feel are important in evaluating the various systems:

Video/Audio performance (S/N, THD, latency)
Robustness (multipath tolerant)
Motion Tolerance (dynamic multipath tolerance)
Distance (Signal/Noise capability)

Throughput (Mbps)
Interference tolerance (in particular adjacent channel performance, both analog and digital)
Size, weight, power draw
Cost
Availability

Ideally we would like to see a modulation scheme that when implemented accommodates all of the above requirements in a product or compatible product family. To date we have not yet tested a system that fulfills these requirements. Perhaps after we see COFDM working in the high bit rate modes, or VSB in the more robust 2 and 4VSB modes or higher bit rate 16 VSB modes, we would be convinced that such a system indeed is possible. We look forward to testing them when they become available.

B.V. HDTV in 2 GHz

Little has been said so far in this proceeding about HDTV. In WDI's opinion, this is because so little is yet known, and much of what is "known" is actually mostly speculation. The TV industry is in the early stages of a conversion from analog TV to digital TV, or DTV. A significant amount of future DTV programming will be HDTV, not simply DTV. Thus, broadcasters must be able to produce HDTV, and the 2 GHz band is an important tool for field production.

The current analog programming format, NTSC, is also known as 480I/30, or 480 lines, interlaced, with 30 complete frames per second. Most of the digital equipment tested to date has been of the corresponding digital format and capable of carrying the appropriate data rate. However, high-quality SDTV, the next step up towards HDTV, may be expressed as 480P/60, with a raw (uncompressed) data rate double that of NTSC. True HDTV embodies higher line counts and corresponding higher data rates: 720P/60, 1080I/30, and 1080P/24 to list the most commonly discussed formats.

We know that the uncompressed pixel count of 720P is about 4-5 times 480I. We know that contribution quality 480I/30 can be easily carried in 22 Mbps, some suggest lesser numbers, depending upon the motion artifacts deemed tolerable. We have tested pictures of less than critical detail level and shown that most contribution quality 480I can usually be compressed to 10 Mbps, with some ENG quality pictures compressed to as little as 3.5 MBps, so the picture quality, level of detail, and amount of motion are all critical factors determining how much compression is tolerable (along with production requirements for the use of such stressors as slow motion and freeze frame playback of the remote-camera pictures). It could be assumed, thus, that 720P could be compressed to at most 88 Mbps and remain contribution quality, if processors capable of doing this in near-real time (so live programming remains essentially "live") are available. Our current experience is with 360 Mbps for 720P contribution quality and 45 Mbps for distribution quality, not even close to 88 Mbps contribution quality. Opinions differ on

whether 88 Mbps or some lower data rate will be viable for true contribution quality 720P, and if so, if it will be available by 2003.

Assuming for argument's sake that this can be done and is adequate, further extrapolations can be considered from the "carrying capacity" of the technologies we have seen and tested to date, to carry contribution quality HDTV, of at least 720P let alone 1080I data rate, in the 2 GHz band. 16 QAM can only transmit some 36 Mbps in 12.1 MHz. 64 QAM is only capable of 55 Mbps in the same channel width. Our tests of 8VSB demonstrated carrying of 19.36 Mbps in 6 MHz at 2 GHz, which may be extrapolated to almost 40 Mbps in 12 MHz. Clearly, a shortfall exists. Further, signal fragility which could be tolerable from a blimp hovering over a stadium, or over a relatively clear temporary-fixed path, would not be expected to work from a moving helicopter or over a blocked path.

These calculations indicate that additional spectrum will likely be necessary for true HDTV field production. One suggestion would be to make available additional channels in higher frequencies. 8 VSB can be extrapolated to carry roughly 55 Mbps in a 17 MHz channel and over 80 Mbps in the 25 MHz wide channels available at 7 and 13 GHz. However, the higher frequencies lack the building-bounce capability and foliage loss immunity of 2 GHz. Thus, only short distance, clear path signals could be accommodated. This would limit broadcasters' options with respect to long path news and sports feeds by relegating them permanently to lower resolution pictures. The higher frequencies also tend to be largely occupied by fixed links, especially the 13 GHz band, whch is nearly locked-up by CARS distribution in many markets[5]. In sum, it appears that HDTV field production may be very limited unless a way can be found to make more spectrum available at lower frequencies.

[5] The FCC is also considering permitting operations of NGSO FSS systems in the 13 GHz band in ET Docket 98-206 which could impact the use of the band for HDTV field production.
See Reply Comments of SBE, March 29, 1999.