BEFORE THE
FEDERAL COMMUNICATIONS COMMISSION
WASHINGTON, D.C. 20554

RECEIVED
APR 26 1999
FEDERAL COMMUNICATIONS COMMISSION
OFFICE OF THE SECRETARY

DOCKET FILE COPY ORIGINAL

In the Matter of	)	
	)	
Request for Review by	)	
Integrated Systems	)	CC Docket No. 96-45
and Internet Solutions, Inc.	)	
of Decision of Universal	)	
Service Administrator	)	
Federal-State Joint Board	)	
on Universal Service	)	CC Docket No. 97-21
Changes to the Board of	)	
Directors of the National	)	
Exchange Carrier Association,	)	
Inc.	)	
Tennessee State Department	)	
of Education, Application	)	USAC Application No. 18132
(FCC Form 471) for Approval	)	
of Funding	)	

Reply To Opposition

TABLE OF CONTENTS

I. INTRODUCTION 2

II. THE STATE'S UNDERLYING APPROACH TO TRANSITIONING FROM A STATE-OWNED NETWORK TO AN INTERNET SERVICE PROVIDER IS SUPPORTIVE OF USF PROGRAM ELIGIBILITY 4

III. CONNECTEN DOES NOT RENDER THE ENA SERVICE A STATE-OWNED WIDE AREA NETWORK OR INELIGIBLE FOR USF SUPPORT 14

IV. CONCLUSION 19

EXECUTIVE SUMMARY

The Administrator of the Schools and Libraries Division of the Universal Service Administrative Company has referred to the Commission for decision the question of whether to fund the Application of the State of Tennessee for support for the State's Internet Access Service for its k-12 schools. The contract for this service was awarded by the State to Education Networks of America, Inc. ("ENA") after a competitive bidding process found by the Administrator to be in compliance with the USF Eligibility Rules and by the State to be in compliance with State Procurement Regulations. The losing bidder, Integrated Systems and Internet Solutions, Inc. ("ISIS 2000"), after appealing its loss to the highest contract review panels in the State and being rejected, then appealed to the Administrator and to the Commission. ISIS 2000 effectively argues that its bid was lower and, therefore, the State was improper in awarding the contract to ENA as the "least cost" provider under USF eligibility rules. It supports this position, not on the basis of law or policy but rather, with a selective interpretation of facts.

The State of Tennessee has decided to, and has, disposed of its ConnecTEN educational network, as it has every right to do. It has awarded an Internet Services contract to ENA and this contract provides for one of the "least cost" and "most efficient and effective" Internet Services in the Nation at $1.97 per student per month. This is an "undisputed fact." Based on this fact alone, the Service should be funded. The "undisputed facts" cited by ISIS 2000 are incorrect, mischaracterized, and misstated. They are <u>not</u> undisputed. The Service should also be funded

because it complies with all Commission eligibility rules and because it is required by Tennessee students and is mandated by the Congress.

Tennessee, in transitioning from a state-owned network to an Internet Service, used every means at its disposal to reduce USF funding, including that previously found satisfactory by the Commission -- competitive bidding and proportionate funding. ISIS 2000 refuses to acknowledge this fact. The only way that Tennessee could have reduced USF first-year funding further, along with its own proportionate funding requirement, was to accept a Service or facility it did not desire, which could not meet its educational requirement and which would ultimately cost significantly more. This is what ISIS 2000 requests. This is what Tennessee has refused to do. Tennessee has the right to select a Service, to dispose of its network, and to request proportionate USF funding for its Service. ISIS 2000 has no right to ask Tennessee to select a Wide Area Network over an Internet Service; it has no right to ask the State to keep, redefine or upgrade, in whole or part, its prior network; it has no right to dictate the State's selected method or manner of structuring payments, and it has no right to deny Tennessee the right to the funding allowed other States. In brief, ISIS 2000 should not be permitted to relitigate the ISIS 2000 contract dismissed by the State under the guise of USF eligibility.

The ISIS 2000 positions should be rejected, quickly. Tennessee Schools should be permitted to move forward with their Application for Internet Access Service. The children who

do not receive Service in this school year can never retrieve that lost opportunity. Tennessee children have already lost the 1999 Spring Semester and should not have to lose another.

BEFORE THE
FEDERAL COMMUNICATIONS COMMISSION
WASHINGTON, D.C. 20554

In the Matter of	)	
	)	
Request for Review by	)	
Integrated Systems	)	CC Docket No. 96-45
and Internet Solutions, Inc.	)	
of Decision of Universal	)	
Service Administrator	)	
Federal-State Joint Board	)	
on Universal Service	)	CC Docket No. 97-21
Changes to the Board of	)	
Directors of the National	)	
Exchange Carrier Association,	)	
Inc.	)	
Tennessee State Department	)	
of Education, Application	)	USAC Application No. 18132
(FCC Form 471) for Approval	)	
of Funding	)	

Reply To Opposition

The State of Tennessee ("Tennessee" or "State"), acting by and through its Department of Education, herein respectfully submits, pursuant to Sections 54.719 and 1.45 of the

Commission's Rules ("Rules"), its Reply ("State Reply") to the Opposition to Requests For Review of the State of Tennessee and Education Networks of America, Inc. ("ISIS 2000 Opposition") filed by Integrated Systems and Internet Solutions, Inc. ("ISIS 2000"), in the above-captioned matter on April 13, 1999.

I. INTRODUCTION

In its Opposition, ISIS 2000 does not specifically address any of the matters raised in the State's Request for Review ("State Request"). It does not address the law, the facts or the public policy set forth in support of the State's Request and that require a reevaluation of the Administrator's decision ("Decision"). It is the State's view that the law, the facts and the public policy are quite clear and definitive and that they support unequivocally the grant of Universal Service Fund ("USF") support for Tennessee's K-12 schools. Rather, ISIS 2000, as the losing bidder for the State's Internet Access Service contract, simply attempts to renew its ongoing efforts to overturn the State's competitive bidding process. In this regard, it argues that, irrespective of the law, the public policy and the facts supporting USF funding, the Administrator's Decision, denying USF support for Tennessee schools pending a Commission review of the "newly adopted" USF Rules, was appropriate because, "underlying the State's Application", was a "creative contracting scheme" (Opposition at page 5) which "simply sought

to maximize the amount of USF funding for the State" (Opposition, at page 3). This is incorrect, as the facts show and as ISIS 2000 well knows!

ISIS 2000 has continually distorted and misrepresented the State transactions and events underlying the State's Application. This is largely due to the fact that, because these underlying transactions were taken on a State-wide consortium basis rather than on a per-school basis, and because they include the Final Conclusions of a State contract review process rather than simply the results of a bid tender, they can be made to seem "complicated" when they are simply detailed (ISIS Opposition at page 5) and then can be taken out of context and mischaracterized by those wishing to distort them for their own competitive self-interest.

The ConnecTEN transactions and events underlying the State's Application, once analyzed beyond mere rhetoric and "catch-phrases", not only are fully compliant with all State and USF support Rules and policies, but also were taken simply to SAVE both State and proportionate USF funding, not to increase them! Using the State's complete procurement process record (which implemented one of the lowest per student costs of $1.97 per-student for Internet Access Service in the Nation) rather than the partial record presented by ISIS 2000, the State's Application for support should be approved by the Commission, as not only compliant with the Rules but as achieving the maximum true economies the Congress mandated and expected.

II. THE STATE'S UNDERLYING APPROACH TO TRANSITIONING FROM A STATE-OWNED NETWORK TO AN INTERNET SERVICE PROVIDER IS SUPPORTIVE OF USF PROGRAM ELIGIBILITY

The ISIS 2000 assertion forming the basis of its Opposition is that the State decision to transition from a State-owned Network ("ConnecTEN") to an Internet Service Provider ("ISP"), is "an extremely suspicious transaction" (ISIS Opposition at page 10). This ISIS 2000 assertion is built solely on the premise that the transition has "no economic meaning or consequence" other than USF funding. (Opposition, page 8). This premise is faulty, unsupported and incorrect.

The State's decision to obtain an Internet Access Service was based on solid technical and operational reasons, well-documented and well-understood by all State officials involved in making this decision. The State did not want to own equipment rapidly becoming obsolescent, or be responsible for it in remote underserved and unsupported areas. Instead the State, in large part based on its experience, wanted to obtain an end-to-end Internet Access Service from an Internet Service Provider that would continually oversee, maintain and upgrade the Service to rapidly changing commercial standards, as required (see, State Consolidated Response at Section V). Indeed, both the Congressional and the Commission decisions underlying the establishment of the USF Fund, in rejecting funding for State-owned networks, support the State's decision in

this regard. (See 47 USC § 2741). If the State had recommitted to ConnecTEN, in light of the enumerated and obvious educational, technical, operational and financial advantages of procuring "services" rather than "state-owned facilities", that decision might not have been supported for USF funding, because it would have had no operational or technical foundation, and because it would have resulted in a higher pre-discount price over the life of the contract, on both an overall and per-child basis. (See, State Consolidated Response at Section II). The ISIS 2000 proposal to the State for an upgraded State Network, while purportedly less expensive from a cash-flow basis in the first year according to the (incorrect) ISIS numbers, was the most financially unattractive overall. It's costs keep rising exponentially, it did not include all components and it can not be done at the price quoted. The Rampart Report, produced by ISIS 2000, does not account for any of these "undisclosed ISIS costs", which are real and simply cannot be ignored under State or USF procurement and funding Rules! These unstated costs were documented in the State contract review process, and totaled almost $135 million over the contract period. ISIS 2000 did not object to this documentation then and it should not be permitted to reargue them here. In any event, the decision to move to an ISP, in lieu of facilities, is a decision left to the schools, not to disgruntled bidders and to their captive consultants irrespective of costs.

In addition, the decision to dispose of ConnecTEN itself has clear technical, operational, educational and financial advantages. ISIS 2000 has never really contested this fact! The State

has confirmed the disposition of ConnecTEN (as described below) and has confirmed that it has received cash for the network, which was paid into the State Treasury. While raising doubt through innuendo and questioning, ISIS 2000 also has never contested this fact. And, it has been confirmed by the State's highest contract authorities in a letter directly to the Commission, signed by Tennessee's Commissioner of Education, Commissioner of Finance and Administration, Commissioner of General Services, and Comptroller of the Treasury. Thus, the disposition had a "clear economic meaning or consequence", independent of USF support. The State disposed of an asset the State no longer needed or desired and the State received compensation therefore. The logic and facts are indisputable.

Contrary to ISIS 2000 assertions, the issue, therefore, is not whether the underlying transactions were proper, clear and purposeful, because there are, but rather simply whether the underlying ConnecTEN transaction (a) involved the reuse of "pre-existing" plant under the Rules (Decision, page 2), (b) resulted in "no transfer, at all" of ConnecTEN (Opposition at page 9) or (c) distorted the "lowest pre-discount price" determination. (ISIS Opposition at page 6). The facts clearly show that ISIS 2000 is mischaracterizing the facts underlying each issue and that the resolution of these issues favor of USF support.

First, and as noted above, the State requested USF support for the transaction because a transition was necessary and in the best interest of the schools, and it believed that all other transition alternatives available to it required increased USF support. Thus, the request not only was within the scope of the Rules but also in furtherance of the objectives of the Rules. (See State Consolidated Response, at page 12).

State Transition Alternatives For Internet Service for Schools Beginning Fall 1998*

Event	Value
1. Permitting ISP use of "used" ConnecTEN equipment for initial service	$7,500,000
2. Requiring ISP purchase and use of only "new" equipment for initial service	$12,000,000
3. ISP purchased use of a long distance dial-up "interim" Internet Service until expanded Service is available	$45,000,000
4. "Interim rebuild" requirement for ConnecTEN for 18 months until expanded Service is available	$14.000,000
*USF support would be based on 66 percent of this value.	

Thus, the "least cost" and "most efficient and effective" Alternative mandated by Congressional intent and USF Rules is Alternative No. 1, above. While Alternative No. 2 above may have raised fewer "eligibility questions", as the ISIS 2000 Opposition clearly demonstrates, because it does not rely on previously-owned equipment, the State has a great interest in reserving the USF fund pool, not in wasting it, as logic and the State Application and selection demonstrate.

It should be noted that the value of Alternative No. 1, above also has been calculated in numerous ways by ISIS 2000 to raise doubt, rather than to achieve clarity. When ISIS 2000 wishes to assert a State "give away" to a private entity, it uses an estimated ConnecTEN value of $100,000,000 (Rampart Report). When it wishes to assert a lower value for reduced USF funding purposes it uses its $300,000 estimate. Neither is supported, both are purely speculative and thus undeserving of consideration. As documented, the value is the State's effective depreciated Net Book Value. Also, ENA calculated the "market value" based on comparing the cost of purchasing parts of the existing network with used equipment and installed software for interim use, versus purchasing all new equipment at the beginning of its contract. This was confirmed by the State contract review process. The ISIS 2000 bid was effectively an attempt to appropriate State assets below pure salvage value. There was no "secret scheme", it was a publicly declared process and request in an RFP. The State's Procurement Process was fully and completely implemented.

In terms of how this transaction was presented in the State's Form 471 Application. The State could not discuss the ConnecTEN transaction with the Administrator beforehand because ISIS 2000 had filed a Protest even before a contract was executed, and, knowing the USF Program Integrity Rules, no one in the USAC could or would respond to the State's inquiries! Therefore, the only way the State could get an opinion how this transition was to be reflected was

to include it in its Application, as it did. The State also reserved the right, however, to amend the presentation in its Application, as a result of the Protest, such as to reflect, for example, its recurring nature.

In brief, the State continues to believe that focusing on a disposition of ConnecTEN at net book value, as required by State Procurement Rules, was reasonable. It also continues to believe that the State was correct, and acting in the best interest of the USF, in not prohibiting bidders from purchasing and using components in their Internet Access Service. This is true if for no other reason than they were "used" and cheaper than "new" components and because their availability made it possible to eliminate the high costs for an Interim Service required to be available when the schools opened. As noted in detail, there was no other transition choice since clearly three-quarters of rural Tennessee schools had no ISP service alternative at the time which could be reached without a cost-prohibitive dial-up toll call.

Second, with respect to the question of how ConnecTEN was disposed of, by sale, lease or otherwise, the simple and legal answer is that "the State sold its interest in ConnecTEN" (State Opposition at Attachment H). The State issued an RFP based on its understanding of its and the Commission' Rules and on its requirement for assured Internet Access Service with equal service levels for every student in the State, and with a reliability such that every teacher could use

Internet regularly in his or her classroom. It requested services to meet its schools' needs and offered to sell any and all of its existing assets to providers. The State thus chose to remove itself completely from the network business, having no control at all over any network components used by the new service provider. The State has certified to this fact.

ENA offered $7.5 million, the effective depreciated net book value, for certain portions of the ConnecTEN operating plant. It also received the exclusive right to use, without cost, other portions of the plant, which could not be transferred pending subsequent State action later in the year. The State's Information System Council accepted this offer. The plant components not sold outright were disposed of under an exclusive, capital-lease type transfer, giving ENA full and complete operational and financial responsibility and control. It is important to note that for any components where the title did not immediately pass, these components were not included for USF funding purposes!

Regardless of the disposition method required by the State Procurement Rules, the uncontested fact remains that the State has no control over what may remain of ConnecTEN. It was transferred, irrevocably and exclusively to ENA. Even ISIS 2000 does not contest this fact. Since the State no longer has ownership rights or control, de facto or de novo, it is not a State-owned Network or a State-controlled or operated WAN. There is, quite simply, no law or policy

to support any other conclusion, such as ISIS 2000 continually asserts by innuendo and questions alone.

Third, while ISIS 2000 claims that the underlying ConnecTEN transaction has distorted the "pre-discount price", this can not be true, factually or legally. Since the "lowest pre-discount price" is the price before USF and State funding is considered, the ConnecTEN sale could not have impacted this price. Further, the State used its pre-announced bidding criteria and selected (a) the "lowest cost provider" and (b) the bidder offering "most efficient and effective" service to meet its specific technical and managerial needs (State Request at page 2). While ISIS 2000 states, "a lower pre-discount price received fewer points", as demonstrated in its Opposition (State's Opposition to ISIS at page 12), ENA would have received fewer cost points with a higher pre-discount price. The point calculation clearly compared options for pricing that ENA could have offered and showed that if its cost had been higher, ENA would have received fewer cost points.

As ISIS 2000 knows, it is impossible to make a direct comparison of ENA and ISIS 2000 pre-discount prices because of the problems of, and omissions from, the ISIS 2000 cost proposal. However, to the extent possible, these are summarized in the following chart resulting from the State's review and evaluation process.

Lowest Cost Proposal Based on Entire Review of State's Evaluation and Conclusions

ENA bid, pre-review by State	ENA bid, after full review by State	ISIS bid, pre-review by State	ISIS bid, after full review by State	State calculation, using alternate provider to verify reasonableness of ISIS calculations (BellSouth.Net)
$74 million	$74 million	$51 million	$186 million	$123 million
Conclusion: Lowest cost @ $1.97 per student per month	Conclusion: Lowest cost	Conclusion: Effectively Non-Responsive. Spreadsheet error; Not feasible, unsupported by tariffs & equipment specified in ISIS proposal	Conclusion: Highest cost based on corrected ISIS spreadsheet, unchallenged by ISIS in Review & Hearings	Conclusion: Alternate but still higher cost than ENA, using standard Internet rates for BellSouth territory schools (only two-thirds of school sites)

As collateral support and for updated information, the State has just issued an RFP and received bids for Internet Access for State agencies. The managed transport cost alone of delivering this service (without equipment or trouble-shooting and maintenance services to

school sites) is $20,000 per T-1 line. This means that this cost alone for T-1 service for State schools would be $126,000,000 for the ISIS 2000 proposal. This documents further that the State chose the lowest cost provider in selecting ENA for its schools' services, and correctly analyzed ISIS 2000's bid during the State's Hearing and evaluation process. This State RFP for State agencies also has reconfirmed the fact that, in establishing a Service payment plan, it is less expensive to allow "nonrecurring costs" rather than to insist upon or permit all "recurring costs" over the life of a contract. The State's payment plan allows the schools to utilize the State's less expensive capital rather than a bidder's higher cost capital in Tennessee. (see also, Lowest Cost Proposal Chart, above, which shows BellSouth.Net higher recurring costs with lower nonrecurring costs). Thus, the decision to allow bidders to include "one-time" costs helps to achieve the "lowest pre-discount price." As previously noted, 'nonrecurring costs", in Tennessee's situation, is an indication of efficiency rather than of a facility purchase. Thus, the underlying ConnecTEN disposition did not, and does not, distort the State's pre-discount price or cost evaluation. (See State Request at page 12). Rather, it underscores the beneficial effects of the State's methods on the USF fund in achieving $1.97 per student per month as an extremely low cost.

In summary, the State, because of its need to transition from a State-owned network to a full-service Internet Service Provider, disposed of ConnecTEN. This disposition was handled in

a fashion to maximize the timing and early service advantages to the State's k-12 children, and to reduce the State and the USF contributions otherwise required, but available. This disposition was presented to the USAC for review, as there was no other precedent. Because the Administrator desired Commission support, this disposition has now been seized upon by ISIS 2000 to distort its beneficial purposes and effects , and to extend doubt to the remainder of the State's USF Application. While the transaction has been labeled by ISIS 2000 as "complicated", due to State Procurement Rules, the facts are clear, contrary to the ISIS 2000 claims. The bidding process resulted in a "least cost" proposal being accepted.

III. CONNECTEN DOES NOT RENDER THE ENA SERVICE A STATE-OWNED WIDE AREA NETWORK OR INELIGIBLE FOR USF SUPPORT

Finally, ISIS' 2000 claims that ENA "simply took over" responsibility for the operation of the Department's existing and operating state-wide ConnecTEN network" and that "the USF program is not designed to fund "privately-owned facilities." (ISIS Opposition at page 1).

First, the facts are quite clear: ENA is not simply 'taking over' the old State network! While it did purchase a number of ConnecTEN components, (this purchase has been discussed earlier), this simply permitted the extension of service to begin before the school year commenced, i.e. until ENA could upgrade its Internet Access POPs and other elements necessary for expanded services. As these ENA's POPs are upgraded, they will expand and increase the levels of ISP services as expected under the contract.. ENA is utilizing these components to extend its ISP Service, just as any ISP utilizes existing lines to extend into a new area until new lines can be justified based on growing users and traffic levels.

Furthermore, the comprehensive ENA proposal positively considered the State's suggestion that bidders respond through a prime contractor, since it was probable that no one company in Tennessee could provide the Internet Access Services called for in their RFP. The negative innuendo by ISIS 2000 about ENA competency is incorrect and also focuses only on one member of the bidding group. This has been discussed earlier at length. Like any ISP, ENA utilizes its own facilities and subcontractors to deliver its services. This group of subcontractors includes thousands of employees, the largest telecommunications provider in the Southeast (BellSouth), the largest ISP (ISDN-Net) in the state providing service to thousands of customers and other ISP's, one of America's largest engineering and computer consulting firms (NCR), and one of the largest network manager and maintenance and engineering providers for worldwide networks (Lucent Technologies). Indeed, these companies have established a very competitive

ISP service to compete in Tennessee's underserved areas. The schools expect to take full advantage of this. This could not be done with a state network or with the ISIS 2000 approach.

Further in this regard, ENA will not simply "resell" ConnecTEN. It will utilize its own facilities and services, augmented by ConnecTEN components, for the delivery of a complete end-to-end Internet Access Service based on a contractual responsibility to deliver a service level of 2 web pages/minute (specifically designed as a service level to meet school needs), including penalties if the Service is not delivered. The ENA network provides technology functions including: peering with multiple Tier 1 providers at ENA's network access point; taking responsibility for all routing of traffic within Tennessee; provision of multiple routes and redundancy for schools to reach the Internet in the event of failure. This capability was not available to a state-owned WAN or to the schools in Tennessee prior to the ENA contract. They are also providing multiple levels of maintenance and engineering support in multiple locations to meet any kind of crisis anywhere in the ENA's ISP service area. (State Request at page 14).

ENA, also contrary to ISIS 2000 innuendo, has invested, and will invest, significant funds in addition to the State's Service fees into its network expansion (see State Consolidated Reply at page 6 and ENA Reply at page 13). There is simply no truth in the suggestions by ISIS 2000 that the ENA network is the old ConnecTEN network. The State's fees will address only a small part of the ENA financing requirements over the term of the Service, particularly if the

State elects to move to another provider, which is its right under the contract. The ENA network will include, routers, caching servers etc. as clearly reflected in the record and, this is not unexpected but rather encouraged by the Rules. But, it is not the facilities that distinguish ENA. Rather, ENA like any ISP, will be constantly adjusting and managing the service to meet its service commitment of 2 web pages per minute for 90,000 computers.

In brief, the State chose the ENA Internet ISP group, in part, because it already has been doing for several years what the State wanted and on a large scale.

Finally, there is simply no substance behind the ISIS 2000 claim that ENA and its bidding group 'is not a real ISP'. (Opposition at page 17). Other Applications before the Administrator for "real ISPs", and the above discussions, clearly establish this point. Georgia schools, through the PeachNet consortium and through MESA; Kentucky schools, through BellSouth.Net and Qwest; Michigan schools through MERIT; and Florida schools through FIRN, are all examples of similar services, ISP equipment funding and payment policies. See also, Attachment A hereto, MERIT Services and USF Eligibility. In addition, documentation is provided herewith (Attachment B) with regard to private schools that were funded with exactly the same configuration. Further, there is no eligibility rule for Internet services about funding 'real ISPs', the Rule looks at the Service, not the identity of the provider. And, there is no substance behind the ISIS 2000 claim that the lack of low-cost Internet Access in rural Tennessee

is "pure speculation" (Opposition, page 13). ISIS 2000's own bid, indicating core Internet connection points in Atlanta, Georgia, belie its own assertions and the State's documentation. There also is no substance to the ISIS 2000 claim that ISIS 2000 is a "real ISP". ISIS 2000 had no facilities in Tennessee, no Internet customers, no established rates, a Dun & Bradstreet report showed a "no rating" of its $1.5 million Negative Net Worth, no company bank relationship, no construction plant, no ISP, no hubs, no routers... etc. Moreover, any ISP bidding on the State's service, including ISIS 2000 or BellSouth.Net, would have had to 'take over' components of ConnecTEN or build new extensions, to be able to deliver the service promptly; and, would have had to rely on a group of links to provide the service. ENA had the risk capital and credit lines to perform this contract. While ISIS 2000 had a large foreign parent company, it committed NO support whatsoever to the Tennessee bid. This is further indication of the radical differences between the two bidders. Tennessee selected ENA because, as an ISP, it was willing and able to accept a Service-risk contract, unavailable through a state or private facility-purchase, or tariff purchase. ISIS 2000 was willing to accept no Service risks but has relied on legal protests, dispute claims, appeals, innuendo, partial truths, newspaper interviews and articles, distortions and all political and legal means available to prevail.

ISIS 2000 has proposed a privately controlled and publicly owned WAN for Tennessee schools, i.e. a facility to be owned, at least in major part, and directly controlled by the State,

initially to provide Internet Services to its schools, but thereafter capable of providing any other voice and data services the State might dictate, after the receipt of initial USF funding. This is what is normally referred to as a Private Line Network, as contrasted to a Public Switched Network ("IMTS") or an Internet Service Network ("ISP"). As noted above, the ENA Service has none of the attributes of this type facility, as much as ISIS 2000 distorts the record. It is not state-owned, or state-controlled, and it is used commercially by others for ISP services from each POP, and technically it can not be used for voice (including IMTS) and or data services. It is not dedicated to the State, it was not funded by the State, it is not made up of ConnecTEN and it is similar, if not identical in all critical areas, to the consortium Internet Services provided, and funded by the USF, in Georgia, Kentucky, Virginia, Alabama, and Michigan! One key difference is that ENA, as Tennessee's largest ISP, provides the State of Tennessee with some of the most comprehensive services available anywhere. And, these are at a greatly reduced cost per student, in part because the State was willing to transition so efficiently and effectively for USF support purposes. This is what is so disturbing to Tennessee school children.

IV. CONCLUSION

ISIS 2000 has focused on the State's unique transition situation to distort and mischaracterize the State's Application. The State had no alternative but to proceed as it did, if it

were to be able to achieve Internet Access Service for its K-12 schools. It encouraged new ISPs to enter the State-wide school market where none had previously existed. It contracted for a fully-competitive Internet Service based on the "lowest pre-discount price" and the "most efficient and effective service, and one that is among the lowest cost in the Nation." It rejected "simply more hardware", for many of the same reasons that the USF rejects its eligibility. It followed the USF and State funding Rules "to the letter".

ISIS 2000 should not be allowed to distort the State situation through unsupported questioning and mischaracterizations of the ConnecTEN transaction alone, and to make a complex situation so confusing as to prevent definitive analysis and thereby deny USF funding. This is an unconscionable use of government process for a purely self-serving commercial gain. The State has certified the transaction as to all challenged areas, as required by the Rules. As ISIS 2000 knows, "no one can prove a negative" and thus its strategy in this regard should be rejected.

Tennessee continues to believe that its Application warrants full funding and it renews its Request for support.

BY: STATE OF TENNESSEE

William K Coulter

William K. Coulter, Esq.
Its Attorney

William K. Coulter, Esq.
Coudert Brothers
1627 I Street, N.W.
Suite 1200
Washington, DC 20006
Tel: (202) 736-1811

April 26, 1999

AFFIDAVIT

I, JACQUELINE B. SHRAGO, the undersigned, do hereby declare under penalty of perjury that the facts contained in the foregoing "Reply to Opposition" of the Tennessee Department of Education are true and correct to the best of my knowledge, information and belief informed after reasonable inquiry.

Jacqueline B. Shrago

Jacqueline B. Shrago

Executed on this 26th day of April, 1999.

CERTIFICATE OF SERVICE

I, Christine L. Zepka, hereby certify that copies of the foregoing Reply to Opposition of the Tennessee Department of Education were mailed, postage prepaid, on this 26th day of April, 1999, via first class mail, to the following individuals at the address listed below:

William E. Kennard, Chairman
Federal Communications Commission
The Portals
445 12th Street, S.W., Room 8-B201
Washington, D.C. 20554

Commissioner Michael K. Powell
Federal Communications Commission
The Portals
445 12th Street, S.W., Room 8-A204
Washington, D.C. 20554

Commissioner Gloria Tristani
Federal Communications Commission
The Portals
445 12th Street, S.W., Room 8-C302
Washington, D.C. 20554

Commissioner Harold Furchgott-Roth
Federal Communications Commission
The Portals
445 12th Street, S.W., Room 8-A302
Washington, D.C. 20554

Commissioner Susan Ness
Federal Communications Commission
The Portals
445 12th Street, S.W., Room 8-B115
Washington, D.C. 20554

Christopher J. Wright, Esq.
General Counsel
Federal Communications Commission
The Portals
445 12th Street, S.W., Room 8-C723
Washington, D.C. 20554

Lawrence E. Strickling, Chief
Common Carrier Bureau
Federal Communications Commission
The Portals
445 12th Street, S.W., 5th Floor
Washington, D.C. 20554

Irene Flannery, Chief
Accounting Policy Division
Common Carrier Bureau
Federal Communications Commission
The Portals
445 12th Street, S.W., 5th Floor
Washington, D.C. 20554

General Counsel
Schools & Libraries Division
Universal Service Administrative Co.
1023 15th Street, NW, #200
Washington, D.C. 20005

Jeffrey S. Linder, Esq.
Wiley, Rein & Fielding
1776 K Street, N.W
Washington, D.C. 20006
Counsel to Education Networks of America

Ramsey L. Woodworth, Esq.
Robert M. Gurss, Esq.
Rudolph J. Geist, Esq.
Wilkes, Artis, Hedrick & Lane, Chartered
1666 K Street, N.W.
Suite 1100
Washington, D.C. 20006

Lisa Zaina, Acting Deputy Bureau Chief
Common Carrier Bureau
Federal Communications Commission
The Portals
445 12th Street, S.W., 5th Floor
Washington, D.C. 20554

Christine L. Zepka

Attachment A

Merit Services and USF Eligibility

January 14, 1998

Note:

While a given Merit service may be eligible, the service must also be obtained by an eligible school, library or consortium (possibly through competitive bidding), must be used for educational purposes, and may not be resold.

Type of Service	Eligible?	Notes
Dedicated Connections	Yes	All types - ISDN, Frame Relay, leased lines. All costs will be eligible - routers, CSU/DSUs, and leased phone circuits. Equipment is not sold - it is supplied as part of the service we provide.
Dial-up Access via MichNet	Yes	Dial MichNet accounts are eligible.
Simultaneous Access Tokens	Yes	Provides dial-in access for several users.
Shared Dial-in	Yes	They are not buying modems - they are buying a service.
Realm Service	Yes	Some organizations won't be able to provide dial-in services unless we run realm service for them. In those cases, the Realm Service should be considered as part of the Shared Dial-in service.
1-800 dial-in service, Merit Global Service and Autonet dial-in service	Yes	
Installation fees	Yes	Installation of direct attachments is covered in the total cost of the service.

Maintenance fees	Yes	Maintenance of routers, CSU/DSUs, etc is covered as part of the direct attachment service.
Web Hosting Service	No	However, the administrative dial-in account and additional e-mail accounts would be eligible. Web consulting for content development would not be eligible.
E-mail hosting service	Yes	
Training	Generally, No.	However, if a small part of an eligible service, then it is covered. e.g. 1/2 day training as part of a dedicated connection
WANs	Yes & No	Although not listed separately, we have designed and installed some WANs or portions of WANs. WANs that consist of circuits leased from a phone company are eligible. If the circuits between buildings are PRIVATELY OWNED rather than leased, the circuits are INELIGIBLE. The costs for Merit to monitor and manage a WAN are eligible if the WAN is used to deliver Internet access to eligible schools and libraries. Probably best not to use the term WAN in a proposal, use the phrase "shared access to the Internet" instead.
Consulting Services	No	
Internet Server Configuration	Yes & No	Eligible if the server being configured is eligible. e.g. - configuration of a file server would be ineligible, but configuration of an e-mail server would be eligible.
Internet Servers	Yes & No	Unclear at this point. Some servers are eligible and some are not. We assume that DNS, E-mail, RADIUS and caching web servers are eligible, but Web and News servers are not.
System Administration services	Yes & No	Eligible if the server being administered is eligible.
NOC services	Yes & No	Eligible if the server being monitored is eligible.
Software	Yes & No	Networking software is eligible if installed on eligible servers.

MichNet Dedicated Connection Services

MichNet, Michigan's regional network, connects schools, colleges, universities, libraries, government agencies, research institutions, and businesses throughout the state to the world-wide Internet. Created in 1966 and known worldwide as a leader in network technology innovation, Merit is a non-profit corporation governed by 11 of Michigan's four-year publicly supported universities.

More than 240 Michigan organizations have become Merit affiliates, and enjoy a connection to Michigan's primary data communications path. Merit can work with your organization to set up a fast, reliable connection to the Internet. We do this by arranging for a private line data circuit, Frame Relay data circuit or ISDN line to be used with a router and other communications equipment to attach your organization's local area network to MichNet.

Your MichNet attachment gives you access to the full range of services on the Internet, including the World Wide Web (WWW), Gopher, Archie, USENET News, electronic mail, Telnet, FTP, etc. Merit operates Web and Gopher servers, a software archive, Domain Name Service, Network News, Network Time Server, and offers MBONE (multi-cast backbone) feeds. All of these services are available to Merit affiliates at no additional charge. In addition, Merit members and affiliates operate Gopher, WWW, and other servers that are available to you.

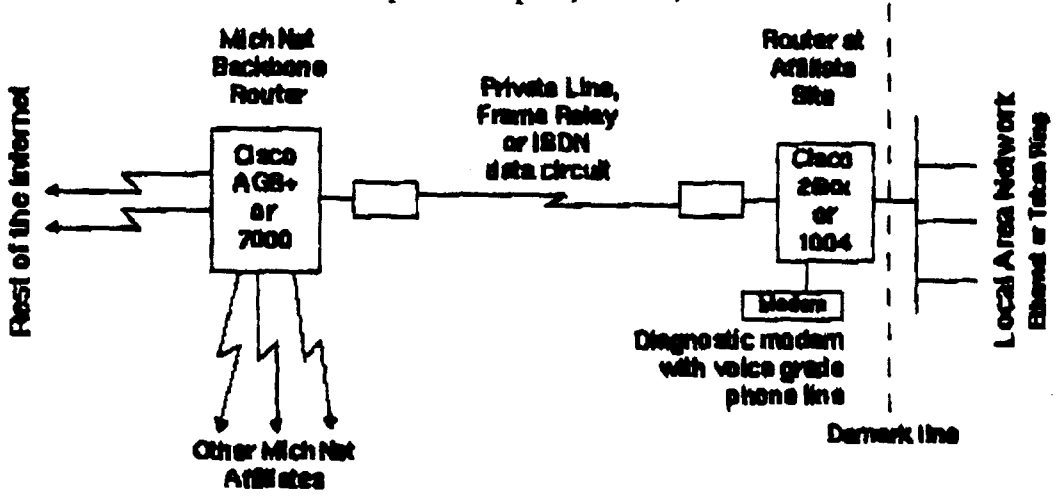

MichNet is connected to the rest of the Internet via a 45M bps (T3) circuit to MCI in Ann Arbor, Michigan. MichNet is also connected to SprintNet, a commercial X.25 network and ADP/Autonet.

A graphical view of the current MichNet Backbone is available on Merit's Web page.

Connection Speeds

Connections are made using one of several technologies, including: private line digital data circuits, frame relay circuits, and ISDN circuits. Dedicated connections are available at speeds of:

- 56 Kbps (56,000 bits per second)

TELALINK
INTERNET

March 23, 1999

To Whom It May Concern:

Telalink Corporation, an Internet Service Provider, located in Nashville, Tennessee, provides Internet services to schools in Tennessee and has been approved in each case by the SLD for E-Rate fund reimbursement.

The services we provide are standard Internet services, and include management of the router onsite at each school. We consider management of the router at the client site to be a standard service item, necessary to provide the best quality of service to our customers.

Fees that we typically charge clients include both one-time (startup) fees and periodic fees (typically monthly or quarterly). One-time fees are necessary to defray costs related to client setup and equipment configuration. Periodic fees represent the cost of service, and as an aggregate, defray the cost of infrastructure required to provide service to the client, including equipment that may be dedicated to each client as well as a particular client's pro-rata share of common equipment.

All network nodes at which IP addresses are routed require routers or, in some cases more costly IP switches. Routers are typically the less costly of these two pieces of equipment. Routers will be found within all ISP networks at critical node points and will typically be found at the POP where a client connects to the ISP.

In addition to basic network infrastructure, we maintain adequate service element capacity including Domain Name Service, Mail Service and Caching Service, necessary to insure cost effective and responsive Internet service. These are standard service elements used to provision service to any client.

Domain Name Service, and Mail Services have long been established elements of provisioning Internet services. Caching services have more recently become common amongst Internet Service Providers, resulting in more reliable and responsive service to the client.

Regards,

Bob Collie
Vice President/Chief Technical Officer

110 30th Avenue North, Suite 3 • Nashville, TN 37203 • v 615.321.9100 • f 615.321.9110 • www.telalink.net

5.2.3 Proposer Experience

5.2.3.1

A brief statement of how long the Proposer has been performing the services sought, specifically stating experience implementing and managing Internet Protocol (IP) networks with at least 1500 sites, geographically dispersed, using ISDN lines, requiring end user desktop support where users are not technically trained.

ENA and its principals have been performing the precisely defined services for approximately two years. In addition, ENA, its principals, and its team members have vast experience performing the services sought. Sections 5.2.2.3 and 5.2.3.3 describe in detail the specific experience each team member brings to the State of Tennessee's ConnecTEN network. The ENA team has breadth and depth of experience in managing Internet Protocols, geographically dispersed networks, ISDN networks, and providing end-user desktop support

© 1998 Education Networks of America

ZOCALO

Full-Service Internet Connectivity for Business

When it comes to Internet connectivity, MultiPoint Access is the best solution available.

MultiPoint Access is a cost effective, high performance, full time, fully managed Internet service. We base it upon Frame Relay fast packet-switching technology to provide advanced bandwidth management features, proactive error prevention, redundant data paths, fault tolerance, and most important, flexibility to meet the specific wide-area networking needs of each of our diverse customers.

MultiPoint Access provides not only Internet service, but also the high-speed data lines and the routing equipment necessary to take advantage of it, all preconfigured for your use.

MultiPoint Access Internet connections are available throughout the United States and Northern Europe at speeds ranging from 56 kilobits per second to full T1, 1.544 megabits per second.

ANF

2355 Virginia Street
Berkeley, California, U.S.A.
info@zocalo.net

+1 510 540 8000 voice
+1 510 548 1891 fax
+1 510 540 8006 data

Attachment B

Richard Harley
Data Networking Account Consultant

Business Multimedia Services
1975 Lakeside Pkwy, Suite 350
Tucker, GA 30084
Toll Free (800) 325-4631
Fax: (770) 482-9521

March 9, 1999

Dear Mr. Fannel,

Thank you for considering AT&T as your data communications partner to provide dedicated Internet access. Our WorldNet℠ Managed Internet Service product is one of the most reliable in the industry: we offer you FASTAR I and FASTAR II, our rapid-response network recovery and monitoring systems. We are also one of the few companies in the industry that offer you Service Level Guarantees; a feature whose benefit, I am sure, is important to a company such as yours.

With AT&T you receive the advantage, the ingenuity, and the experience of Bell Laboratories. AT&T prides itself on it's outstanding network reliability and customer support. These features work together to make our WorldNet℠ Managed Internet Service a benefit to companies like yours in ways that few of our competitors can match. Please read on to learn more about this exciting and outstanding product.

AT&T, a premiere provider of telecommunications and electronic commerce services, provides the following advantages....

- AT&T provides end-to-end managed Internet connectivity for improved performance and engineering
- World-Class Customer Support - technical assistance and proactive monitoring 24 hours per day, 7 days per week
- Enhanced Security Services for greater protection

The synergy that AT&T is gaining in the industry is unparalleled in the marketplace. Our Internet access services and Web server operations have grown exponentially, due to our experience and depth of resources. Because of our long history of access expertise and breadth, we are able to offer an unequaled combination of strengths both in implementing current technology and evolving to meet new opportunities.

AT&T WorldNet℠ Managed Internet Service will provide high levels of performance, reliability and quality service you would expect from AT&T. I look forward to working with you through a successful implementation of this project. Please read on for more information.

1. AT&T WorldNet℠ MIS SERVICE DESCRIPTION:

The Basic offer is appropriate for customers who prefer to manage several elements of the service in-house, have a large internal IP network operation and expertise, and prefer to retain control of the

AT&T PROPRIETARY
NOT FOR UNAUTHORIZED DISCLOSURE

premise equipment. The customer is also responsible for providing, programming and installing the premise equipment.

The Plus offer provides a managed "end-to-end" connectivity service to the Internet with options that include features and support appropriate for customers who prefer complete "vendor" provided solutions for their designated connectivity needs to the Internet.

The Express Value Pack offer provides the Plus service with several options to provide a bundled Internet solution. The Express Value Pack includes the lease of router and CSU/DSU, Primary Domain Name Service, Network News Feed Service, Packet Filtering, and waiver of the WorldNet℠ MIS installation fee.

2. QUALITY OF SERVICE:

2.1 Implementation Support:

In order to provision a customer for MIS service, the following implementation support steps need to be undertaken.

2.1.1 Site Planning and Preparation:

MIS provides site planning information to the customer's designated point of contact. The customer then needs to provide:

- Space and power for a router and CSU/DSU
- Space and power for other premises equipment depending on which options the customer chooses
- An attachment to the customer's internal network
- At least one computer with TCP/IP support.

The MIS NOC will perform registration of network numbers, domain names, and routing information as required for the customer's environment.

1.2 Communications Circuit Ordering:

MIS will order and install on behalf of the customer the ACCUNET private line or IFRS circuit necessary for delivery of service. MIS arranges for the termination of the circuit in proximity to the planned location of the premises equipment.

2.1.3 Equipment Provisioning and Staging:

Customers of MIS Plus may purchase and own their premises equipment or purchase/lease it from MIS, but assign full management and operational control of that equipment to MIS (see Option A). Customers of MIS Basic purchase their own equipment which should be according to a specified customer premise equipment list and manage and control that equipment.

2.2 Initial Integration Service:

Both MIS offers, Plus and Basic, provide Internet integration support. This includes consultation and assistance toward performance of the following initial configuration and orientation tasks on the customer's fully installed Internet host:

- TCP/IP software configuration.
- DNS Primary/Secondary server configuration.
- SMTP Mail Host configuration.

MIS will only undertake such activities on approved computing systems with suitable TCP/IP software.

2.3 Acceptance Testing:

The MIS Network Operations Center (NOC) conducts tests to the customer's site to ensure that the on-site router can successfully communicate over the MIS network. The acceptance test verifies the proper operation of the on-site equipment package, the local access facility, and the MIS access infrastructure.

2.4 Acceptance Criteria:

Project implementation is considered complete and service billing is initiated when the following criteria have been met:

- The access router and associated premises equipment is installed at the customer site, and IP connectivity to the Internet (including routing outside the MIS network) exists. The MIS technical staff verifies IP connectivity through a test which sends repeated pings through the Internet to the customer site and verifies that the pings were received.
- For customers with their own domain, the customer's domain is registered with InterNIC, and any MIS-supplied primary and secondary DNS servers are operational for it.

2.5 New Customer Training:

For MIS Plus customers, installation includes training on networking topics such as establishing domain name servers, configuring gateways, implementing subnetting schemes, and processing electronic mail addresses. Customer is responsible for travel and lodging to training course.

3. SERVICE OPTIONS:

AT&T PROPRIETARY
NOT FOR UNAUTHORIZED DISCLOSURE

There are many options available with both the MIS Basic and the MIS Plus offer types. The availability of these options for each offer type is shown with a "√" in the following table.

Feature	Basic	Plus	Express Value Pack
DNS Registration	included	included	included
Site Planning	n/a	included	included
CPE Provisioning & Staging	n/a	included	included
Acceptance Testing	included	included	included
Training	n/a	included	included
Network Monitoring	included	included	included
Access Link Management	included	included	included
Router and CSU/DSU Maintenance	n/a	included	included
Software/Configuration Support	n/a	included	included
24 Hour Hotline	included	included	included
Trouble Ticket Reporting and Problem Resolution	included	included	included
Fault Isolation	included (to service dmarc only)	included (extends to LAN port on router)	included (extends to LAN port on router)
CPE Router + CSU/DSU	n/a	✓	included
Primary Domain Name Service	✓	✓	included
Network News Feeds	✓	✓	included
Packet Filtering	n/a	✓	included
Usage Reports	n/a	✓	✓
Secondary DNS	✓	✓	✓

3.1 Option A: Premise Equipment Package:

Option A is called "Premises Equipment Package" and is available only to MIS Plus customers. The Premises Equipment Package consists of a TCP/IP Router, a CSU/DSU, Loopback Connectors, a Transceiver, and Cables. This premises equipment allows the customer to connect to MIS and the Internet.

3.1.1 MIS Plus:

MIS Plus customers choosing this option can purchase or lease from MIS the equipment shown in the following table, Table 2.

TABLE 2 LIST OF EQUIPMENT PROVIDED TO MIS PLUS CUSTOMERS.

SPEED	TYPICAL EQUIPMENT
56 Kbps	Cisco 2500 series Router Cray DCP 3080 CSU/DSU Cable to connect Router to CSU/DSU Connector between Router and LAN
Fractional T-1, T-1	Cisco 2500 series Router Digital Link VX Encore CSU/DSU Cable to connect Router to CSU/DSU Connector between Router and LAN
T45	Cisco 7000 series Router Digital Link DL3100 CSU/DSU Cable to connect Router to CSU/DSU Connector between Router and LAN

3.1.2 MIS Basic:

Option A is not available to MIS Basic customers. MIS Basic customers purchase and manage their own premises equipment.

3.2 Option B - Primary Domain Name Service:

Option B is called "Primary Domain Name Service" and is available for both MIS Plus and Basic customers. Domain Name System [DNS] is a system used for translating names of network nodes into IP addresses. For example, a client program does DNS lookup to determine the IP address of an FTP server, and a browser uses DNS lookup to determine the IP address of a Uniform Resource Locator [URL].

A customer, whether in MIS Plus or Basic, can choose to implement its own Primary DNS server, or choose Option B and have MIS implement the Primary DNS service. This Option provides Primary DNS for up to 15 zones and 150 Kbytes of associated zone file data [this translates into approximately 4000 DNS entries]. Secondary DNS backup is part of MIS Plus and Basic and is up to 10 zones and 100 Kbytes of associated zone file data. Secondary DNS service is maintained on multiple servers which are physically diverse and connected to the MIS network at different points. Note that customers are able to purchase multiple instances of primary/secondary DNS in order to accommodate their entire list of domain names.

As a function of the service, MIS will assist the customer in obtaining a domain name from the InterNIC. Any charges that result from this registration are the responsibility of the customer. The customer will be the owner of the domain name. MIS does not assist non-MIS customers with this registration process.

3.3 Option C - Network News Feed Service:

Option C is called "Network News Feed Service" or "Netnews" for short and is available for both MIS Plus and Basic customers. This option is not required in order to have connectivity to MIS and the Internet.

Netnews is a forum of regional, national and international discussion groups that specialize in thousands of topics. Network News Transfer Protocol [NNTP] is used to access Netnews. In order for a customer to access Netnews, the customer needs to install a news server on its premises. MIS will then feed the news feeds, the ones that the customer selects beforehand, from the MIS central Netnews server to the customer's server via NNTP. Note that the customer is responsible for purchasing, installing, managing and maintaining its news server.

The size of the memory on the customer Netnews server needs to be chosen to accommodate not only the huge daily volume of the feeds but also the accumulated volume of news that results from not been read on the same day it is received. An example is that a customer Netnews server that has a full feed, about 3000 users, and where the received news are set to expire after one week needs more than 4 Gbytes of disk space.

3.4 Option D - Packet Filtering:

Option D is called "Packet filtering" and is available only to MIS Plus customers. Although it is not a requirement for access to MIS and the Internet, nor a full-proof security solution, this option is a recommended feature. It is an IP header-level security and traffic control tool that can be implemented on the customer router.

Packet filtering allows or denies IP packets to and from the customer network based on address filtering tables built into the customer router. MIS implements the filtering tables based on customer feedback and oversees their ongoing management.

3.5 Option E - Usage Reports:

Option E is called "Usage Reports" and is available only to MIS Plus customers. It is a service enhancement that a customer can subscribe for, although it is not a requirement for access to MIS and the Internet.

Usage reports are reports that summarize the customer traffic through its router. Router statistics are collected using Simple Network Management Protocol [SNMP] every 15 minutes. The statistics collected are the utilization on the access line between the customer location and the MIS network. What is graphed is the maximum of the input or output traffic in each 15 minute period. The Y axis is the % utilization. The X axis is time. Horizontal lines appear on the graph for the average, median and the 95th percentile of plotted points.

Weekly summary reports are generated and provided in postscript format to the customer via e-mail. The typical size of these files is 38 Kbytes. For those customers that can't print Postscript, the reports are faxed. The reports allow the customer to proactively plan upgrades in the bandwidth size of the access line.

3.6 Option F - Additional Secondary DNS: