THE LAWLER GROUP, LLC

GREGORY E. LAWLER
A. RICHARD METZGER JR
RUTH M. MILKMAN

1909 K STREET, NW
SUITE 820
WASHINGTON, D.C. 20006
PHONE (202) 777-7700
FACSIMILE (202) 777-7763

SANTE J. ESPOSITO
ROBERT L. FOOSE II
DANIEL N. SEGAL

DOCKET FILE COPY ORIGINAL

RECEIVED

JUN 1 5 1999

FEDERAL COMMUNICATIONS COMMISSION
OFFICE OF THE SECRETARY

June 15, 1999

Magalie Roman Salas
Secretary
Federal Communications Commission
445 12th Street, SW
Washington, DC 20554

Re: Notice of Proposed Rulemaking Concerning Deployment of Wireline Services Offering Advanced Telecommunications Capability, CC Docket No. 98-147.

Dear Ms. Salas:

Attached are the original and twelve copies of the Comments of NorthPoint Communications, Inc. regarding the Commission's Notice of Proposed Rulemaking Concerning Deployment of Wireline Services Offering Advanced Telecommunications Capability, CC Docket No. 98-147.

Sincerely,

Ruth Milkman

Enclosures

No. of Copies rec'd 0+4+12
List A B C D E

Before the

FEDERAL COMMUNICATIONS COMMISSION

Washington, DC. 20554

In the Matters of	)	
	)	
Deployment of Wireline Services Offering Advanced Telecommunications Capability	)	CC Docket No. 98-147

RECEIVED

JUN 15 1999

FEDERAL COMMUNICATIONS COMMISSION
OFFICE OF THE SECRETARY

COMMENTS OF

NORTHPOINT COMMUNICATIONS, INC.

NORTHPOINT COMMUNICATIONS, INC.

Steven Gorosh
Michael Olsen
Glenn Harris
NORTHPOINT COMMUNICATIONS INC.
222 Sutter Street, 7th Floor
San Francisco, CA 94108
415/365-6013
molsen@northpointcom.com

Ruth Milkman
THE LAWLER GROUP, LLC
1909 K Street, NW
Suite 820
Washington, D.C. 20006
202/ 777-7700
rmmilkman@aol.com

Table of Contents

I. INTRODUCTION AND SUMMARY 1

II. THE COMMISSION SHOULD REQUIRE LINE SHARING. 6

A. LINE SHARING IS ESSENTIAL TO PERMIT BROAD-BASED RESIDENTIAL DSL COMPETITION 6

1. Line Sharing Is Required In Order To Remedy the DSL Price Squeeze..... 7

2. Line Sharing Is Required In Order To Alleviate Unnecessary Facilities Shortages That Impede Competitive DSL 12

B. INCUMBENT LEC OPPOSITION TO LINE SHARING IS MISPLACED 13

C. THE COMMISSION SHOULD REQUIRE THE INCUMBENT LECS TO PERMIT SHARED LINE ACCESS IN A MANNER THAT CONFORMS TO EXISTING STANDARDS 16

D. LINE SHARING IS TECHNICALLY AND OPERATIONALLY FEASIBLE 17

1. NorthPoint's Approach To Line Sharing Presents No Novel Technical Or Operational Issues 18

2. Line Sharing is Technically Feasible 18

3. Line Sharing is Operationally Feasible 21

E. THE COMMISSION SHOULD REQUIRE ACCESS TO SHARED LINES EITHER AS AN UNBUNDLED ELEMENT OR AS EXPANDED INTERCONNECTION. 23

1. The Commission Should Require Incumbent LECs to Permit Access to Shared Lines Through Expanded Interconnection 24

2. Competitive LECs Should Have Access to Shared Lines as Unbundled Network Elements 25

3. Pricing for Shared Line Access Through Expanded Interconnection and as an Unbundled Element Must Relieve the DSL Price Squeeze 28

III. SPECTRUM COMPATIBILITY AND MANAGEMENT POLICY MUST ADVANCE THE GOALS OF THE ACT AND THE COMMISSION 32

A. APPLICATION OF THE COMMISSION'S "SIGNIFICANT DEGRADATION" TEST BEST ADVANCES THE GOALS OF THE ACT AND THE COMMISSION 35

1. Established Technologies 36

2. New Technologies 36

3. Certain Special Services May Be Managed Appropriately to Advance Nondiscriminatory Spectrum Policies 38

B. THE COMMISSION SHOULD OVERSEE SPECTRUM POLICY DEVELOPMENT, IMPLEMENTATION AND ADMINISTRATION 40

1. *Spectrum Policy Must Be Consistent With the Goals of the Act, Be*

Broadly Representative, Nondiscriminatory, and Remain Under Commission Supervision *41*
2. The Commission Should Not Delegate Its Authority over Spectrum Policy to T1E1 or Other Industry Standards Organizations *42*
3. The Commission Should Appoint An Advisory Committee Modeled On The North American Numbering Council *46*

IV. CONCLUSION **48**

Summary

The Commission's decision on line sharing will determine whether residential consumers will receive the benefits of competition and innovation promised in the Act. Line sharing permits competitive local exchange carriers (LECs) to provide digital subscriber line (DSL) service on shared lines with incumbent LEC voice service. Competitive LEC access to shared lines is a *prerequisite* to the broad deployment of competitive DSL to residential users. Without line sharing, the millions of residential users who *could* immediately benefit from competitive DSL will be denied it.

Residential broadband competition is among this Commission's highest priorities. As this Commission recently noted, "[o]ne of the fundamental goals of the Telecommunications Act of 1996 (the 1996 Act) is to promote innovation and investment by multiple market participants in order to stimulate competition for all services, including broadband communications services."[1] Several Commissioners have expressed the need for quick action to facilitate competition in the consumer broadband market. In August 1998, Commissioner Ness asked "what we [the Commission] can do not only to promote the deployment of advanced telecommunications capability but also to facilitate *consumer choice* among broadband service suppliers."[2] Commissioner Tristani, noting the lack of consumer broadband competition, recognized that the implementation of line sharing in the *Advanced*

---

[1] *In the Matter of Inquiry Concerning the Deployment of Advanced Telecommunications Capability,* CC Docket No. 98-146 (January 28, 1999) (FCC 99-5) (*Advanced Services Report*) at ¶ 1.

[2] *Separate Statement of Commissioner Susan Ness*, August 6, 1998, *In the Matter of Deployment of Advanced Wireline Services Offering Advanced Telecommunications Capability*, Memorandum Opinion and Order and Notice of Proposed Rulemaking, CC Docket 98-147 (August 6, 1998) (FCC No. 98-188).

Services proceeding is the answer: "Today, the business market is starting to reap the benefits of competition among providers of high-speed data services. Residential markets, unfortunately, are much farther behind. The steps we take today [toward requiring line sharing] could greatly enhance competitors' ability to serve residential markets."[3] Chairman Kennard recently emphasized that delivering competition in residential broadband services is a top priority of the Commission:

> Because the goal is to bring all Americans the benefits of a competitive marketplace, we must redouble our efforts to bring choice to residential subscribers - - choice in local phone service and choice in broadband access .... Line sharing has great potential to open up the marketplace to even more broadband competitors. That's why we're giving it a very close look.[4]

Line sharing is the *sine qua non* for residential DSL competition. While incumbent LECs deliver DSL services on a shared line, NorthPoint and other DSL competitive LECs are *excluded* by the incumbent LECs from exploiting that efficiency. So long as DSL competitive LECs are precluded from line sharing, consumers who wish to obtain DSL services from a competing vendor are forced to purchase second lines. Second lines are costly, artificially doubling the cost to provide competitive DSL, and putting the price of competitive service out of reach of residential consumers.

Forcing competitive LECs to use costly second lines for services that could be provided on a shared line gives the incumbent LECs an artificial price advantage, referred to as the

---

[3] *Separate Statement of Commissioner Tristani,* March 18, 1999, *In the Matter of Deployment of Advanced Wireline Services Offering Advanced Telecommunications Capability,* First Report and Order and Further Notice of Proposed Rulemaking, CC Docket 98-147 (March 31, 1999) (FCC No. 99-48) (hereafter *Advanced Services Order and NPRM*).

[4] Remarks of *FCC Chairman William E. Kennard Association of Local Telecommunications Services (ALTS) Convention Nashville, TN, May 3, 1999,* "A

(cont'd)

"DSL price squeeze." The DSL price squeeze is both substantial and intolerable: in the absence of line sharing, the wholesale cost of DSL "piece parts" (collocation and loops) purchased by DSL CLECs are as much as 200% more than the full price of incumbent LEC retail DSL. DSL competitive LECs who would serve residential users would suffer losses of as much as $40 per month with each new customer *before* recovering costs for networks, electronics and equipment, overhead and return on investment. Thus, it is clear that so long as incumbent LECs continue to exclude competitive LECs from shared lines and are allowed to perpetuate the DSL price squeeze, residential DSL competition will founder. As explained below, line sharing will eliminate the DSL price squeeze, facilitate further investment by DSL competitive LECs, and will permit residential users to enjoy the fruits of the 1996 Act's policies.

NorthPoint Communications, Inc., (NorthPoint) is ideally positioned to deliver competitive DSL services to residential users on shared lines. NorthPoint is a competitive LEC focused exclusively on the delivery of broadband DSL to small business and residential consumers. As a result of the Act's pro-competitive policies that permit competitors to utilize the national wireline network, NorthPoint has deployed service in more than 19 major markets comprising more than 40 cities nationally and is serving thousands of previously underserved consumers and small businesses with advanced telecommunications services. NorthPoint has dedicated hundreds of millions of dollars, volumes of expertise, and hundreds of employees to turn the pro-competitive goals of the Act into a practical reality. Today, thousands of users enjoy services from NorthPoint and other DSL competitive LECs that would not, and could not, have been available prior to passage of the Act. More importantly,

---

Competitive Call to Arms."

NorthPoint and other data competitive LECs are, as a result of their collocation in thousands of incumbent LEC central offices, substantial investment in new technologies, and strategic partnerships with internet service providers with millions of end-user customers, ready to deliver millions of lines of broadband DSL to underserved residential customers. Contrary to the claims of skeptics, it is possible to have widespread residential broadband competition, and NorthPoint is prepared to deliver it.

Let there be no doubt, however: without the immediate implementation of a rule requiring the incumbent LECs to offer competitive LECs access to shared lines to provide DSL and the elimination of the DSL price squeeze, most residential consumers will be denied the benefit of DSL competition. Instead, the market for residential broadband will be dominated by at most one or two incumbent providers. In that case, the market will likely fail to deliver the bounty of services, technology, investment and choice that residential subscribers were promised in the 1996 Act. The Commission has vowed to ensure that there are a variety of facilities-based providers of residential broadband service[5] and line sharing is the key to achieving that goal.

In addition to ordering line sharing, the Commission must reassert its authority over spectrum policy. Despite the Commission's adoption in the March 1999 *Advanced Services Order* of a "significant degradation" test for spectrum compatibility issues, incumbent LECs and standards bodies continue to undermine competitive LECs and their innovative services by making unfounded or discriminatory spectrum interference claims that do not follow the Commission's interim test. To halt the incumbent LEC assault against new services and new

[5] See *Advanced Services Report* at ¶ 52 ("We [the Commission] will fight any attempt to make residential broadband" a monopoly or duopoly.)

entrants, the Commission must reassert that the test for "significant degradation" shall serve as both the short- and long-term model for spectrum compatibility and management policy, and forbid any incumbent LEC or trade-group action that directly or indirectly undermines that standard.

Similarly, the Commission should move swiftly to enforce basic, nondiscriminatory spectrum policies to ensure that new technologies, including innovative broadband DSL services offered by competitive LECs, are not stifled. As the Commission recognized in the *Advanced Services Order and NPRM*, the incumbent LECs can and will use fabricated spectrum interference claims to slow or obstruct the deployment of competitive advanced services.

Accordingly, NorthPoint further urges the Commission to maintain jurisdiction over spectrum policy to ensure that the advantages of innovation and competition are not forfeited by the application of inappropriate spectrum rules administered by third parties and incumbent LECs. Specifically, rather than to defer to incumbent LECs or existing standards bodies, the Commission should appoint an expert body to develop, implement, and administer spectrum policy that is consistent with the significant degradation test and the Commission's goals of maximizing the deployment of innovative services while protecting against actual network harm. Only in this way can the Commission ensure that these goals are not sacrificed by incumbent LECs or other standards bodies that either do not share or are not charged with pursuing the pro-competitive goals of the Act.

Before the

FEDERAL COMMUNICATIONS COMMISSION

Washington, DC. 20554

In the Matters of	)	
	)	
Deployment of Wireline Services Offering Advanced Telecommunications Capability	)	CC Docket No. 98-147
	)	

COMMENTS OF NORTHPOINT COMMUNICATIONS

I. INTRODUCTION AND SUMMARY

The Commission's decision on line sharing will determine whether residential consumers will receive the benefits of competition and innovation promised in the Act. Line sharing permits competitive local exchange carriers (LECs) to provide digital subscriber line (DSL) service on shared lines with incumbent LEC voice service. Competitive LEC access to shared lines is a *prerequisite* to the broad deployment of competitive DSL to residential users. Without line sharing, the millions of residential users who *could* immediately benefit from competitive DSL will be denied it.

Residential broadband competition is among this Commission's highest priorities. As this Commission recently noted, "[o]ne of the fundamental goals of the Telecommunications Act of 1996 (the 1996 Act) is to promote innovation and investment by multiple market participants in order to stimulate competition for all services, including broadband

communications services."[1] Several Commissioners have expressed the need for quick action to facilitate competition in the consumer broadband market. In August 1998, Commissioner Ness asked "what we [the Commission] can do not only to promote the deployment of advanced telecommunications capability but also to facilitate *consumer choice* among broadband service suppliers."[2] Commissioner Tristani, noting the lack of consumer broadband competition, recognized that the implementation of line sharing in the *Advanced Services* proceeding is the answer: "Today, the business market is starting to reap the benefits of competition among providers of high-speed data services. Residential markets, unfortunately, are much farther behind. The steps we take today [toward requiring line sharing] could greatly enhance competitors' ability to serve residential markets."[3] Chairman Kennard recently emphasized that delivering competition in residential broadband services is a top priority of the Commission:

> Because the goal is to bring all Americans the benefits of a competitive marketplace, we must redouble our efforts to bring choice to residential subscribers - - choice in local phone service and choice in broadband access .... Line sharing has great potential to open up the marketplace to even more broadband competitors. That's why we're giving it a very close look.[4]

---

[1] *In the Matter of Inquiry Concerning the Deployment of Advanced Telecommunications Capability*, CC Docket No. 98-146 (January 28, 1999) (FCC 99-5*) (Advanced Services Report*) at ¶ 1.

[2] *Separate Statement of Commissioner Susan Ness*, August 6, 1998, *In the Matter of Deployment of Advanced Wireline Services Offering Advanced Telecommunications Capability*, Memorandum Opinion and Order and Notice of Proposed Rulemaking, CC Docket 98-147 (August 6, 1998) (FCC No. 98-188).

[3] *Separate Statement of Commissioner Tristani*, March 18, 1999, *In the Matter of Deployment of Advanced Wireline Services Offering Advanced Telecommunications Capability*, First Report and Order and Further Notice of Proposed Rulemaking, CC Docket 98-147 (March 31, 1999) (FCC No. 99-48) (hereafter *Advanced Services Order and NPRM*).

[4] Remarks of *FCC Chairman William E. Kennard Association of Local*

(cont'd)

Line sharing is the *sine qua non* for residential DSL competition. While incumbent LECs deliver DSL services on a shared line, NorthPoint and other DSL competitive LECs are *excluded* by the incumbent LECs from exploiting that efficiency. So long as DSL competitive LECs are precluded from line sharing, consumers who wish to obtain DSL services from a competing vendor are forced to purchase second lines. Second lines are costly, artificially doubling the cost to provide competitive DSL, and putting the price of competitive service out of reach of residential consumers.

Forcing competitive LECs to use costly second lines for services that could be provided on a shared line gives the incumbent LECs an artificial price advantage, referred to as the "DSL price squeeze." The DSL price squeeze is both substantial and intolerable: in the absence of line sharing, the wholesale cost of DSL "piece parts" (collocation and loops) purchased by DSL CLECs are as much as 200% more than the full price of incumbent LEC retail DSL. DSL competitive LECs who would serve residential users would suffer losses of as much as $40 per month with each new customer *before* recovering costs for networks, electronics and equipment, overhead and return on investment. Thus, it is clear that so long as incumbent LECs continue to exclude competitive LECs from shared lines and are allowed to perpetuate the DSL price squeeze, residential DSL competition will founder. As explained below, line sharing will eliminate the DSL price squeeze, facilitate further investment by DSL competitive LECs, and will permit residential users to enjoy the fruits of the 1996 Act's policies.

Telecommunications Services (ALTS) Convention Nashville, TN, May 3, 1999, "A Competitive Call to Arms."

NorthPoint Communications, Inc., (NorthPoint) is ideally positioned to deliver competitive DSL services to residential users on shared lines. NorthPoint is a competitive LEC focused exclusively on the delivery of broadband DSL to small business and residential consumers. As a result of the Act's pro-competitive policies that permit competitors to utilize the national wireline network, NorthPoint has deployed service in more than 19 major markets comprising more than 40 cities nationally and is serving thousands of previously underserved consumers and small businesses with advanced telecommunications services. NorthPoint has dedicated hundreds of millions of dollars, volumes of expertise, and hundreds of employees to turn the pro-competitive goals of the Act into a practical reality. Today, thousands of users enjoy services from NorthPoint and other DSL competitive LECs that would not, and could not, have been available prior to passage of the Act. More importantly, NorthPoint and other data competitive LECs are, as a result of their collocation in thousands of incumbent LEC central offices, substantial investment in new technologies, and strategic partnerships with internet service providers with millions of end-user customers, ready to deliver millions of lines of broadband DSL to underserved residential customers. Contrary to the claims of skeptics, it is possible to have widespread residential broadband competition, and NorthPoint is prepared to deliver it.

Let there be no doubt, however: without the immediate implementation of a rule requiring the incumbent LECs to offer competitive LECs access to shared lines to provide DSL and the elimination of the DSL price squeeze, most residential consumers will be denied the benefit of DSL competition. Instead, the market for residential broadband will be dominated by at most one or two incumbent providers. In that case, the market will likely fail to deliver the bounty of services, technology, investment and choice that residential

subscribers were promised in the 1996 Act. The Commission has vowed to ensure that there are a variety of facilities-based providers of residential broadband service[5] and line sharing is the key to achieving that goal.

In addition to ordering line sharing, the Commission must reassert its authority over spectrum policy. Despite the Commission's adoption in the March 1999 *Advanced Services Order* of a "significant degradation" test for spectrum compatibility issues, incumbent LECs and standards bodies continue to undermine competitive LECs and their innovative services by making unfounded or discriminatory spectrum interference claims that do not follow the Commission's interim test. To halt the incumbent LEC assault against new services and new entrants, the Commission must reassert that the test for "significant degradation" shall serve as both the short- and long-term model for spectrum compatibility and management policy, and forbid any incumbent LEC or trade-group action that directly or indirectly undermines that standard.

Similarly, the Commission should move swiftly to enforce basic, nondiscriminatory spectrum policies to ensure that new technologies, including innovative broadband DSL services offered by competitive LECs, are not stifled. As the Commission recognized in the *Advanced Services Order and NPRM*, the incumbent LECs can and will use fabricated spectrum interference claims to slow or obstruct the deployment of competitive advanced services.

Accordingly, NorthPoint further urges the Commission to maintain jurisdiction over spectrum policy to ensure that the advantages of innovation and competition are not forfeited

[5] See *Advanced Services Report* at ¶ 52 ("We [the Commission] will fight any attempt to make residential broadband" a monopoly or duopoly.)

by the application of inappropriate spectrum rules administered by third parties and incumbent LECs. Specifically, rather than to defer to incumbent LECs or existing standards bodies, the Commission should appoint an expert body to develop, implement, and administer spectrum policy that is consistent with the significant degradation test and the Commission's goals of maximizing the deployment of innovative services while protecting against actual network harm. Only in this way can the Commission ensure that these goals are not sacrificed by incumbent LECs or other standards bodies that either do not share or are not charged with pursuing the pro-competitive goals of the Act.

II. THE COMMISSION SHOULD REQUIRE LINE SHARING.

A. Line Sharing Is Essential To Permit Broad-Based Residential DSL Competition

Line sharing permits a competitive LEC to provide high-speed digital services to an end user on the same line that the incumbent LEC uses to provide voice service.[6] Line sharing is possible because DSL technology transmits data at high frequencies that are not otherwise utilized, and are well above the low frequencies used for the provision of plain old telephone service (POTS). Incumbent LECs have refused to permit competitive LECs access to shared lines for the provision of DSL.

Permitting competitive LECs access to shared lines is the prerequisite to broad-based residential DSL competition. As discussed in more detail below, in the absence of line sharing, competitive DSL LECs must use a second, stand-alone loop to serve end users. Such second loops are increasingly scarce and, even when available, sufficiently costly to

[6] See *Advanced Services Order and NPRM* at ¶ 92.

push the price of competitive LEC DSL services out of reach of the consumer market. The high cost and scarcity of second, stand-alone loops will make it impossible for DSL competitive LECs to serve residential users economically. Requiring incumbent LECs to permit line sharing will lower loop costs for DSL competitive LECs and permit residential competition to flourish.

1. Line Sharing Is Required In Order To Remedy the DSL Price Squeeze

a) The DSL Price Squeeze Is Substantial

Line sharing is required for competitive DSL providers to deliver lower-priced DSL services. In the absence of access to a shared line, competitive LECs offering DSL are forced to purchase stand-alone, unbundled loops. By contrast, incumbents' DSL service – *the only DSL service permitted on a shared line with monopoly voice service* – bears no loop costs.[7] This disparity in costs between competitive LEC and incumbent LEC DSL is "artificial" insofar as it is solely the result of discrimination in the availability of access to shared lines, rather than the leveraging of efficiencies, technologies or innovation to reduce costs. Incumbent LEC pricing of DSL reflects no economic advantages over competitive LECs – which are generally recognized to have lower cost structures and to operate more efficiently than the incumbent LECs. Nevertheless, the cost disparity is sufficient to make it impossible for competitive LECs to serve the residential market economically. The extent of the DSL price squeeze, and the need for line sharing to remedy it, cannot be overstated. Note these examples of the DSL price squeeze that persist in the absence of residential line sharing:

- In the *San Francisco Bay Area*, NorthPoint's wholesale loop and collocation costs are **116%** of Pacific Bell's total retail, residential, shared-line DSL product, before NorthPoint begins to recover the incremental and fixed costs of network, equipment or overhead.

- In *New York*, NorthPoint's wholesale costs of loops and collocation are **125%** of the full price of Bell Atlantic's retail, residential "Infospeed" DSL service offered on a shared line before NorthPoint begins to recover the costs of network, equipment, and overhead.

- In *Miami/Ft. Lauderdale*, NorthPoint's wholesale costs for stand-alone loops and collocation are **172%** of the Bell South residential, shared-line DSL service before NorthPoint recovers any costs for network, equipment and overhead.

- In *Los Angeles*, NorthPoint's wholesale costs for stand-alone loops and collocation are **120%** of the full price of residential DSL from the incumbent before NorthPoint recovers costs for networks, equipment and overhead.

- In *Atlanta*, NorthPoint's costs for stand-alone loops and collocation are **140%** of BellSouth's retail DSL before recovery of costs for network, equipment and overhead.

- In *Washington D.C.*, NorthPoint's wholesale costs for stand-alone loops and collocation are about **115%** of the retail price of Bell Atlantic's residential DSL before NorthPoint recovers costs for network, equipment, and overhead.

- In *Denver*, NorthPoint's wholesale costs for stand-alone loops and collocation are **230%** of US West's residential DSL service before NorthPoint recovers costs for network, equipment and overhead.

This price squeeze cannot and will not support viable and vigorous residential competition.

b) The DSL Price Squeeze Will Eliminate Residential, Facilities-Based DSL Competition and Harm Consumers

No competitive LEC can sustain investment where the potential for return is nil; so long as the DSL price squeeze is allowed to persist, competitive LEC DSL providers will

[7] See *Advanced Services NPRM* at ¶106 and n. 226.

eventually neglect to serve residential markets. The absence of competition from DSL competitive LECs will leave consumer broadband services in the hands of a monopoly or duopoly. The Commission properly has observed that such a market structure "would not perform well for consumers."[8] Specifically, the Commission declared it would "fight any attempt to make residential broadband such a [monopoly or duopoly] market" because:

> Economic theory teaches that, in countries that are rich in resources and in which products can continually improve in quality, consumers benefit from relatively fast innovation. Innovations arrive sooner when many, rather than few, firms enter. Therefore, consumer welfare will be increased by more entry into the market for broadband facilities and services. *Id.* (emphasis added).

The Commission's concern about the absence of meaningful competition from facilities-based DSL competitive LECs is well founded, for consumers will be deprived of a number of specific benefits:

- DSL competitive LECs offer superior services. As recently noted by the San Francisco Chronicle, competitive DSL services offered by NorthPoint and others are easier to install and perform better than incumbent DSL. *See* "PacBell stumbles with DSL: Users cite delays and access problems," San Francisco Chronicle, March 26, 1999 and "DSL service providers deliver the goods," San Francisco Chronicle, April 8, 1999.

- DSL competitive LECs have deployed innovative technology to provide advanced services. NorthPoint has built a state-of-the-art broadband network designed to deliver superior DSL services. On June 8, 1999, NorthPoint and its vendor Copper Mountain were awarded CMP's "SuperQUEST" award for outstanding achievement in the implementation of local DSL networks against

[8] In the *Matter of Inquiry Concerning the Deployment of Advanced Telecommunications Capability to All Americans*, CC Docket 98-146 (January 28, 1999) (FCC 99-5) at ¶ 52.

a field that included incumbent LECs like co-finalist US West.

- DSL competitive LECs are poised to serve millions of residential lines from existing collocation space. NorthPoint will enter the third quarter of 1999 with facilities collocated in incumbent LEC central offices that will give NorthPoint access to more than 20 million residential lines in nearly 20 markets. Consumers in each of these markets could benefit from competitive residential DSL offerings from NorthPoint and others but for the absence of line sharing.

- DSL competitive LECs spur investment and innovation through competition. The absence of line sharing will remove the most effective marketplace incentive for incumbent LECs to accelerate investment and the deployment of advanced services to residential users. As the Commission notes, it is investment by competitive LECs in advanced services that largely has "spurred the incumbent LECs to construct competing facilities."[9] Without DSL competitive LECs to spur further investment, the incumbents will resort to tried-and-true monopoly importunities for further "regulatory incentives," special advantages and subsidies, all at the cost of choice and service to the residential DSL user.

Simply put, without line sharing, all of the benefits that consumers are poised to receive from competition will be lost, for no good reason, and the Act's promise to deliver the benefits of choice will be thwarted.[10]

---

[9] *Id.* at ¶ 42.

[10] The systemic cost disadvantage suffered by DSL competitive LECs in the absence of line sharing resonates to the detriment of the whole competitive DSL marketplace. The DSL price squeeze has made it extremely difficult for DSL competitive LECs to secure strategic partnerships with large-scale ISPs (like America Online) that want access to residential customers and will, in the face of cost disadvantages and regulatory uncertainty facing competitive LECs, resort to incumbent LEC wholesale DSL. In the long run, these strategic

(cont'd)

c) Line Sharing Will Remedy the DSL Price Squeeze and Facilitate Broad-Based Residential DSL Competition

As noted above, the DSL price advantage enjoyed by incumbent LECs has everything to do with leveraging their monopolies and nothing to do with leveraging efficiencies and providing better value. The fact is, line sharing is efficient, and as long as incumbent LECs can force competitive LECs to purchase a whole loop, they foist *inefficiencies* on competitors. Imposing this unnecessary inefficiency on competitors creates the artificial cost advantage that derails the ability of DSL competitive LECs to serve the residential market.

Line sharing will remedy the DSL price squeeze.[11] By using more of the existing capacity of the local loop infrastructure, line sharing allows more efficient utilization of the primary network bottleneck. Permitting competitive LEC access to a shared line with existing incumbent LEC voice services adds value without increasing costs.[12] Requiring incumbent LECs to permit competitive LECs to access a shared line for DSL at nondiscriminatory prices and on nondiscriminatory terms and conditions will eliminate the

---

partnerships are essential to the viability of the DSL competitive LECs. As more ISPs migrate to incumbent LECs to get access to residential users, DSL competitive LECs will lose their base and their ability to attract investment, expand, and serve even small business customers in new markets.

[11] NorthPoint continues to support the view that requiring incumbent LECs to provide advanced services through a separate subsidiary, subject to the same pricing, terms, conditions and requirements as competitive LECs and required to deal with the operating company at arms' length, is also an effective remedy for the DSL price squeeze.

[12] US West *Ex Parte*, November 4, 1998, at 4 ("the costs of operating and maintaining the local loop are fixed – they do not vary with usage."); SWBT Comments in *UNE Remand NPRM* at 84 ("A loop represents a fixed cost that does not vary with usage.")

artificial cost disparity that impedes residential DSL competition.[13] If line sharing is implemented in this way, the artificial advantage that incumbent LECs have maintained to lock competitive LECs out of the residential DSL market will vanish, and residential DSL competition will flourish.

2. Line Sharing Is Required In Order To Alleviate Unnecessary Facilities Shortages That Impede Competitive DSL

Line sharing will also facilitate the delivery of competitive DSL services to more users by ameliorating the scarcity of stand-alone loops. Many end user premises are served by only two loops in the last segment of the distribution plant. Accordingly, end users that have already exhausted the facilities that serve them (by installing two phone lines, or phone and fax lines) will have no additional facilities available to them for competitive DSL services. Where there are no additional loops serving an end user, that end user cannot enjoy DSL from NorthPoint or any other DSL competitive LEC.[14]

Facilities constraints caused by the absence of line sharing are already impairing NorthPoint's ability to deliver DSL. NorthPoint is receiving an increasing number of "no facilities" rejections for stand-alone unbundled loops, particularly in residential markets where spare loops are scarce. Line sharing overcomes this constraint by making more

[13] It is essential that incumbent LECs not be afforded an opportunity to frustrate or delay the benefits of competitive LEC line sharing by gaming prices or conditions to the detriment of competitors. Line sharing should be implemented promptly, and the costs in incumbent LEC DSL tariffs should serve as TELRIC proxies to assure nondiscrimination. *See* II.E.3., *infra*.

[14] Arguably, the customer could choose to forego an existing service, such as a phone or fax line, to make a loop available for NorthPoint service. But imposition of such "choice penalties" hardly advances the goals of the Act, or the Commission, or promotes nondiscriminatory consumer choice.

efficient use of existing loops to serve users who otherwise would be denied competitive service. Further, by expanding the pool of potential users served by a central office, line sharing justifies greater levels of investment in collocation and equipment by spreading costs over a larger target market.

B. Incumbent LEC Opposition to Line Sharing is Misplaced

Incumbent LECs – well aware that the DSL price squeeze will defeat any chance of meaningful DSL competition against their monopoly advantage – assert that line sharing is bad public policy. Incumbent LECs claim that because the DSL competitive LECs *could* obtain the advantages of shared-line DSL by offering both voice and DSL on a single, unbundled loop, requiring that incumbent LECs permit access to shared lines is unnecessary. Accordingly, the incumbent LECs contend, excluding DSL competitive LECs from shared lines is neither "discriminatory" nor "impairs" the ability of competitive DSL LECs to offer residential broadband services efficiently.

The Commission tentatively rejected this argument on the ground that requiring competitive LECs to offer integrated voice and DSL as the sole alternative to incumbent LEC bundled services would reduce consumer choice and competition.[15] NorthPoint agrees. There are several reasons why the incumbent LECs' "forced bundle" argument must be rejected.

First, requiring DSL competitive LECs to partner with voice competitive LECs to offer a competitive bundle of services is not an effective substitute for incumbent LEC line

[15] *Advanced Services NPRM* at ¶ 99.

sharing. Although NorthPoint will continue to pursue line sharing opportunities with competitive LECs, its ability to offer DSL over a line shared with such competitive LECs is limited to cases in which the voice competitive LEC is offering service in the same area and to the same market as NorthPoint and is collocated at a central office from which NorthPoint provides DSL. As the incumbent LECs readily concede, few voice competitive LECs are broadly deployed to serve residential users, and no voice competitive LEC is adequately collocated to bundle its service with NorthPoint's national DSL service. Indeed, even against the combined competitive LEC market share of 2-3%, residential services are negligible. Until such time as voice competitive LECs sufficiently penetrate the market to present an alternative to incumbent LEC line sharing, requiring DSL competitive LECs to partner with other competitive LECs is not viable.

Second, requiring customers to switch voice carriers is an ineffective substitute for line sharing because it *increases*, rather than diminishes, technical and operational hurdles and barriers to choice. DSL line sharing with the incumbent LEC is simple. There are no hot cuts, just a simple cross-connect that the incumbent LEC performs daily for itself and for others. Requiring consumers to change voice providers to get shared-line DSL from a competitive LEC would require a hot cut, number porting, and changes in signaling, 911 and 411 databases. These costs and potential difficulties are all avoided by providing DSL on a shared line, making it easier for consumers to exercise choice.

Third, requiring DSL competitive LECs to invest and provide voice services, as a condition of providing residential DSL, is also not an effective substitute for line sharing with an incumbent LEC. Forcing DSL competitive LECs to build voice networks would delay or defeat the deployment of broadband by siphoning investment. A single Class 5

voice switch costs about as much as the DSL electronics for 100 central offices. Obviously, given a limited pool of capital, and focus, "adding" voice services is really a codeword for limiting competitive DSL.

Fourth, even assuming that DSL competitive LECs could provide a voice bundle (self-provisioned or in partnership with competitive LECs) to potential DSL consumers, requiring consumers who want competitive DSL to switch to a new voice provider imposes an artificial hurdle to exercising that choice. For the 99% of residential customers who already have voice services provided by the incumbent, requiring them to switch to another voice carrier is nothing more than a penalty for selecting NorthPoint's competitive DSL.

Fifth, incumbent LEC opposition to line sharing is nothing more than a naked attempt to preserve the voice monopoly and extend it to residential broadband. The incumbent LECs openly leverage this advantage in their DSL offerings, [16] and apparently hope to dominate the DSL market by virtue of their voice monopoly. Line sharing will permit DSL and voice to be "unbundled" in a way that expands consumer choice and prevents incumbent LECs from improperly seeking to monopolize the residential DSL market.

Sixth, *permitting* data competitive LECs to provide shared-line DSL with existing incumbent LEC voice service does not *preclude* the incumbents from offering a "bundled" voice and DSL product. To the extent that the incumbents' integrated offering is more attractive, consumers may still choose that offering over competitive DSL.[17] Line sharing increases the pool of consumer alternatives for DSL and voice services but eliminates none.

---

[16] *See e.g.,* Testimony of Dan Jacobsen on behalf of Pacific Bell, *Petition for Arbitration of PDO Communications, Inc.*, A98-060052 at 3 (California Public Utilities Commission, July 10, 1998 (Pacific Bell DSL customers must purchase Pacific Bell voice service).

[17] Even in this regard, the incumbents continue to make embarrassingly monopoly-

(cont'd)

C. The Commission Should Require The Incumbent LECs To Permit Shared Line Access In A Manner That Conforms To Existing Standards

In the *Advanced Services NPRM*, the Commission requested comment on how to define line sharing in a manner that is clear, minimizes confusion about technical or operational issues, and would not result in a freeze on innovation.[18]

The Commission should require that incumbent LECs permit competitive LECs to share lines based on the configuration in the ANSI T1.413 ADSL standard. That standard calls for the separation of the signal on a frequency basis, and is implemented by use of passive splitter devices that are widely available to (and widely deployed by) incumbent LECs. The splitter routes the data circuit to a DSL terminating device (DSLAM) and the voice circuit to the class 5 switch.

Implementation of line sharing with reference to the national standard will speed the delivery of competitive services without impeding the development of new technologies. Reference to the ANSI standard, and the specifications therein for low-pass/high-pass spectrum division, permits line sharing to be implemented promptly by identifying precisely what the incumbent LECs must unbundle.[19] Further, reference to the ANSI spectrum division method of line sharing need not "freeze" technological advances. Rather, a requirement that incumbent LECs permit line sharing in conformity with standards permits

---

minded arguments. *See, e.g.,* SBC Comments in *UNE Remand NPRM* at p. 84 ("[T]here is no evidence that either suppliers or consumers have any interest in dealing with the inevitable complexity when two independent providers attempt to provide two separate services over a single loop.") Retrograde incumbent LEC arguments founded on the premise that consumers should be protected from themselves merit no consideration.

[18] *Id.* at ¶ 100.

[19] *See Advanced Services NPRM* at ¶ 100.

the interconnection obligation to evolve with established technologies. Where feasible, incumbent LECs and competitive LECs can agree to alternative line sharing arrangements in their interconnection agreements. Additionally, as the Commission tentatively concluded, states are free to mandate line sharing at any technically feasible point.[20]

D. Line Sharing Is Technically And Operationally Feasible

As discussed above, the DSL price squeeze that persists in the absence of line sharing is both substantial and obvious. The incumbents are well aware that the absence of line sharing will deny DSL competitive LECs a fair opportunity to compete in the residential market, and so long as line sharing is delayed, they can extend their monopolies to residential DSL. Accordingly, incumbent LECs have raised a number of general technical and operational "issues" to slow the implementation of line sharing and the attendant residential competition. Several of these arguments, like the contention that line sharing is "technically infeasible," have proved hollow.[21] Others, like those about "assignment, maintenance, billing and repair" of shared lines, are sufficiently vague as to defy response. NorthPoint welcomes an opportunity in its reply comments to address any concrete operational issues raised by the incumbent LECs, but expects that these, like technical claims made previously,

[20] *Advanced Services NPRM* at ¶ 98. Some states are already investigating the imposition of line sharing requirements on the incumbent LECs. See, e.g., In the Matter of A Commission Initiated Investigation Into Incumbent LEC Practices Regarding Shared Line Access, Minnesota Public Utilities Commission, Docket P-999/CI-99-678 (noting that "if line sharing could be made widely available, competition for advanced services would grow more rapidly since consumers would not be required to purchase a second telephone line to have access to high-speed digital services.")

[21] *Advanced Services NPRM* at ¶ 103-4 (concluding incumbent LEC "technical infeasibility" claims are unsupported).

will prove to be misplaced. As set forth below, there are no substantial technical or operational issues that would prevent the prompt implementation of line sharing.

1. NorthPoint's Approach To Line Sharing Presents No Novel Technical Or Operational Issues

The requirement that incumbent LECs permit competitive LECs to access the data-side of a loop in a manner consistent with national standards solves most plausible technical and operational issues, and any remaining issues are neither novel nor insuperable. As the Commission noted in the *Advanced Services NPRM* (¶ 102) "incumbent LECs are already sharing the line for the provision of both voice and advanced services." Indeed, the fact that incumbent LECs currently are deploying shared-line DSL in some fashion throughout the country plainly refutes claims that it cannot be done. Moreover, given that each of the largest incumbent LECs is presently also deploying (or has announced plans to deploy) shared line DSL by providing the data side of the service to an unaffiliated third party, claims that such a configuration is "operationally infeasible" are similarly overstated.

2. Line Sharing is Technically Feasible

The Commission's tentative conclusion that there are no "technical" issues associated with the requirement that incumbents permit line sharing is sound. As NorthPoint has indicated repeatedly,[22] incumbent LECs already perform line sharing by connecting the data portion of a loop to their own DSLAM. Competitive LEC line sharing is identical, and some

[22] *See e.g.* NorthPoint ex parte, November 24, 1998.

of the incumbent LECs appear now to have conceded the point.[23] Because the incumbent LECs deploy shared line DSL in conformity with the national standard themselves, there can be no objection that granting competitive LECs access to the shared line in this way is technically infeasible.[24]

Any technical issues regarding the provision of DSL on the same line as voice service are aimed principally at the potential for an "unknown" technology or configuration. NorthPoint's suggestion that the Commission limit the incumbents' obligation to permit line sharing to nationally standardized technologies eliminates such concerns. Limiting the line sharing obligation to deployed national standards will also address the claims of incumbent LECs that implementation will be lengthy or costly, whereas such claims may more plausibly be asserted against a shared line access requirement that does not conform to ANSI standards.[25] Further, because ANSI standard line sharing is limited to lines that carry traditional POTS service, customers with lines that are used to deliver other enhanced or high frequency services would not be eligible for shared-line DSL from a competitive LEC or the incumbent LEC. Thus, requiring line sharing to be configured consistent with the ANSI

---

[23] *See Advanced Services NPRM* at ¶105 (US West concedes no technical issues).

[24] Commission rules 51.305(c) and (d), and 51.311(d) note that successful interconnection at a particular point in the network, using particular facilities, is substantial evidence that such interconnection is technically feasible. 47 C.F.R. §§ 51.305(c) and (d), 51.311(d). Under the application of national standards for access to the data portion of a shared-line loop facility is sufficient to meet the Commission's test for presuming the feasibility of requiring line sharing. "Adherence to the same interface or protocol standards shall constitute evidence of the substantial similarity of network facilities." *See* 51.311(d). *See also* 51.311(e).

[25] *See, e.g.,* Reply Testimony of William Deere, *In the Matter of Petition of PDO Communications Inc.*, California Public Utilities Commission, September 4, 1998 (A.98-06-052) (asserting a myriad of potential technical and operational challenges associated with non-standard shared line access).

standard puts to rest incumbent LEC arguments about shared-line DSL interfering with other non-POTS, higher-frequency services.[26]

In the *Advanced Services NPRM*, the Commission requested comment whether permitting DSL competitive LECs to provide DSL on a shared line might require conditioning that could impede voice service, and how to resolve such conflicts.[27] Shared line DSL will not impair voice services. To be capable of carrying DSL, copper loops need only be free of bridged taps, loading coils, and intervening electronics. It is rare, particularly on loops less than 18,000 feet, that such conditioning could affect existing voice service. To the extent, and only to the extent, that conditioning loops for DSL would make it impossible to provide analog voice services to the end user, the incumbent LEC would not be required to condition those loops for shared-line DSL. If an incumbent claims an existing voice service is incapable of supporting DSL on the same loop, or that insufficient facilities are available to replace a fiber facility with a copper facility, the incumbent LEC should be required to make an affirmative showing to the state commission that it is technically infeasible to deploy shared-line DSL to that end user. If the technical demonstration is sufficient to convince the state commission that line sharing is not technically feasible to that end user, then the incumbent should be relieved of the obligation to offer access to the data portion of the loop.[28]

---

[26] *See* Bell Atlantic *ex parte*, November 8, 1998 at 1 ("Forcing spectrum unbundling would conflict with current offered services: Data-Over-Voice services (e.g. lottery tkts.), Digital Added Main Lines, ISDN, Electronic Telephone Set) and at 2 (non-standard line sharing may pose "major technical, operational and administrative concerns," including determination of "splitter requirements).

[27] *Id.* at ¶ 104.

[28] *See Advanced Services NPRM* at ¶ 104. Of course, the incumbent LEC could not thereafter "resuscitate" a loop's capabilities and provide DSL itself; any plant modifications

(cont'd)

3. Line Sharing is Operationally Feasible

Now that their "technical infeasibility" claims have, with scrutiny, proved to be unfounded, some incumbent LECs claim that competitive LEC line sharing is "operationally infeasible."[29] Operational infeasibility claims, like the technical infeasibility claims before them, are both vague and overstated, and NorthPoint looks forward to the opportunity to address such claims, if any, in its reply comments. As set forth below, competitive LEC line sharing is operationally straightforward and indistinguishable from incumbent LEC shared line DSL provided today.

Shared line DSL is easily provisioned without interrupting voice service, regardless whether the data provider is a competitor or the incumbent LEC.

Today, incumbent LECs provision new DSL services on existing voice circuits in a manner that results in no interruption in voice services. Sharing the same line with a competitive LEC is indistinguishable.

Existing voice customers have a complete circuit that runs from the outside loop plant to the MDF in a central office. All services are connected, directly or indirectly to the MDF. Existing voice customers' loops are "bridged," or cross-connected, at the MDF to a copper pair that connects to the incumbent LEC's Class 5 switch.

When an incumbent LEC adds DSL service to a line where it already provides voice service, it does three things to connect the service in the central office:

---

that make line sharing feasible must defer to the queue of subscribers and providers that have sought to provide such services. *See Advanced Services NPRM* at ¶ 104.

[29] *Advanced Services NPRM* at ¶ 105.

- First, the splitter is prepared by connecting a data circuit (a twisted pair) from the splitter to the DSLAM, and voice circuit from the splitter to the voice switch. An "in" port on the splitter is readied for receipt of the combined voice/DSL loop.

- Second, the customer's loop is bridged to the splitter in a "half-tap." A half-tap leaves the existing voice circuit intact, but creates a bridge (like a bridge tap) to the splitter. Because the splitter is already cross-connected to the voice switch and the DSLAM, the customer's service is complete.

- Third, the "half-tap" – that is, the direct bridge between the end user's loop and the class 5 switch – is removed. The customer's voice circuit is intact, and the data side of the loop is connected to the DSLAM for the provision of data services. The integrity of the voice circuit is ensured through metallic line testing and related tests performed at the switch.

The incumbent LECs' provision of shared loops to competitive LECs is identical, except that the data-side of the loop is assigned to the competitive LEC's pair instead of the incumbent's pair. (See Attachment 1 – Line Sharing Configuration and Attachment 2 – Line Sharing Central Office Configuration.) This uncomplicated operation is all that is required to connect competitive LEC shared line DSL.

There are no unique ordering, billing, or provisioning issues related to line sharing.

Incumbent LECs have also asserted, without support, that line sharing may present unique problems in ordering, billing, or provisioning unbundled loops.[30] However, like other technical and operational issues, processes for shared line access are practically indistinguishable from the ordering, billing, and provisioning of stand-alone loops. The only difference with shared lines is that the data side of the loop is cross-connected to the competitive LEC's collocated equipment. Ordering will continue to be done through

[30] *See, e.g., Advanced Services NPRM* at ¶ 105 (citing US WEST's concerns relating to "assignment, maintenance, billing and repair systems").

appropriate interfaces, and line sharing would be an ordering option, just as certain types of loop conditioning and cross-connection arrangements are today.

Operations Support System (OSS) functionality can also quickly accommodate competitive LEC line sharing. Incumbent LECs have surmounted OSS hurdles associated with their own DSL offerings by designating that service as a "feature" on their voice customers' electronic records (e.g., "Bell Atlantic DSL"). To accommodate competitive LEC line sharing, the incumbents can designate their voice customers' electronic records to refer to competitive DSL offerings (e.g. "NorthPoint DSL"). To ensure that competitive LEC line sharing is permitted on terms and conditions no less favorable than the incumbent LEC provides itself, OSS functionality that permits incumbent LEC customer service representatives to "qualify" customer voice lines for shared DSL services in real time should promptly be made available to competitive LECs.[31]

E. The Commission Should Require Access To Shared Lines Either As An Unbundled Element Or As Expanded Interconnection.

In the *Advanced Services NPRM*, the Commission tentatively concluded that it has the authority to impose line sharing, and sought comment on this tentative conclusion.[32] There are at least two independent legal theories upon which the Commission could base a line-sharing requirement: as expanded interconnection and as an unbundled element. The two alternatives should both be required; they are not mutually exclusive. Just as carriers may choose to obtain interstate special access service or dedicated transport, one a service, and the

[31] *In the Matter of the Deployment of Wireline Services Offering Advanced Telecommunications Capability,* Memorandum Opinion and Order and Notice of Proposed Rulemaking, CC Docket 98-147 (August 6, 1998) at ¶¶ 56, 152.

other an unbundled network element, competitive LECs should be able to obtain access to a shared line either as an expanded interconnection arrangement or as an unbundled element.

1. The Commission Should Require Incumbent LECs to Permit Access to Shared Lines Through Expanded Interconnection

The Commission should require access to shared loops through expanded interconnection, just as it has required expanded interconnection for other special access services. In 1992, the Commission required expanded interconnection for special access,[33] followed in 1993 by expanded interconnection for switched access.[34] These decisions required Tier 1 local exchange carriers to allow competitors to collocate equipment in the central office to provide access service in competition with the local exchange carrier.

The Commission initiated the *Expanded Interconnection* proceeding at the request of competitive access providers (CAPs). These carriers had requested new interstate interconnection arrangements with incumbent LECs that would allow the CAPs to interconnect at the LEC central office under rates, terms and conditions that would more accurately reflect the facilities they use.[35] Before expanded interconnection was available, CAPs generally were required to provide end-to-end interstate special access services,

---

[32] *Advanced Services NPRM* at ¶ 98.

[33] *In the Matter of Expanded Interconnection with Local Telephone Company Facilities; Amendment of the Part 69 Allocation of General Support Facility Costs*, Report and Order and Notice of Proposed Rulemaking, CC Docket Nos. 91-141 and 92-222, 7 FCC Rcd 7369 (1992) (*Special Access Expanded Interconnection Order*).

[34] *In the Matter of Expanded Interconnection with Local Telephone Company Facilities; Amendment of Part 36 of the Commission's Rules and Establishment of a Joint Board*, Second Report and Order and Third Notice of Proposed Rulemaking, CC Docket Nos. 91-141 Transport Phase I and No. 80-286, 8 FCC Rcd 7374 (1993) (*Switched Access Expanded Interconnection Order*).

because LEC special access tariffs made it economically infeasible for customers to combine their own or CAP facilities with portions of the LEC network to satisfy their special access needs.[36] The Commission's decision permitted customers and CAPs to terminate their own special access transmission facilities at LEC central offices, and therefore increased competition for special access services.

Requiring line sharing through expanded interconnection would increase competition and customer choice, particularly for residential customers, foster innovation, and encourage investment in advanced services. These are the same advantages that caused the Commission to require expanded interconnection previously,[37] and are sound bases for requiring expanded interconnection to facilitate line sharing now.

2. Competitive LECs Should Have Access to Shared Lines as Unbundled Network Elements

The Commission should require incumbent LECs to provide access to shared loops as an unbundled element. Access to shared loops meets the statutory definition of a network element, is technically feasible, and failure to provide access would impair the ability of competitive LECs to offer DSL service.

a) Shared Line DSL Access is a Network Element

[35] *Special Access Expanded Interconnection Order* at ¶ 6.

[36] *Special Access Expanded Interconnection Order* at ¶ 4.

[37] *Special Access Expanded Interconnection Order* at ¶ 14; *Switched Access Expanded Interconnection Order* at ¶ 1.

The Act defines the term "network element" to include "a facility or equipment used in the provision of a telecommunications service," as well as "features, functions, and capabilities that are provided by means of such facility or equipment."[38] The transmission frequencies above those used for analog voice services on any loop are a capability of that loop, and therefore fall within the definition of a network element.

Section 251(c)(3) obligates the incumbent local exchange carriers to provide nondiscriminatory access to unbundled elements at any technically feasible point.[39] In the *Advanced Services NPRM*, the Commission tentatively concluded that it is technically feasible to share frequencies on the loop and, consequently, that an incumbent LEC could offer voice service over the lower frequencies concurrent with competitive LEC DSL services on the higher frequencies. The Commission should adopt its tentative conclusion because, as demonstrated previously, competitive LEC line sharing is technically feasible.

b) The Shared-Line DSL Network Element is Not Proprietary

In its comments in the *UNE Remand* proceeding, NorthPoint agreed with the Commission's tentative conclusion that it should exclude from the term "proprietary" network elements any capabilities that are defined by recognized industry standard-setting bodies such as the ITU or ANSI. As described above, ANSI has established standards for line sharing between voice and ADSL service on a spectrum division model using high-pass/low-pass filter/splitters. Thus, line sharing is not "proprietary" under section 251(d)(2),

[38] 47 U.S.C. Section 153(29).

[39] 47 U.S.C. Section 251(c)(3).

and the Commission should use the "impair" standard to determine whether incumbent LECs are required to provide nondiscriminatory access to shared lines to DSL competitive LECs.

c) The Absence of Shared Line UNEs Impairs the Ability of DSL competitive LECs to Deliver Residential DSL Services

The Commission should require incumbent LECs to offer access to the data frequencies of a POTS loop as an unbundled element because failure to do so would impair the ability of competitive LECs to offer DSL service, particularly to residential customers. In its comments to the *UNE Remand Notice,* NorthPoint argued that under Section 251(d)(2), the Commission should conclude that material impairment exists unless there is a competitive wholesale market for the element at issue. In assessing the competitiveness of the market for a specific element, the Commission should consider the analysis established in the *AT&T Reclassification Order,* and weigh the market share of the incumbent LEC, the supply elasticity of the market, the demand elasticity of the requesting carrier, and whether the incumbent LEC would retain market power simply by virtue of lower cost, sheer size, or superior resources. NorthPoint also pointed out that if the incumbent LEC is the sole provider of a particular element, the inquiry is at an end. In that case, there can be no question that denial of access to the element would impair the competitive LEC's ability to provide service.

Under this or any other reasonable interpretation of "impairment," access to the DSL portion of a shared line is a capability that must be unbundled. There is no competitive wholesale market for copper loops. In addition, as described above, there are no effective substitutes for incumbent LEC line sharing. Even were other carriers willing to share loops,

none could do so on a sufficient scale or scope to make such an alternative to incumbent LEC shared lines a viable and commercially useful substitute.

3. Pricing for Shared Line Access Through Expanded Interconnection and as an Unbundled Element Must Relieve the DSL Price Squeeze

NorthPoint has consistently maintained that prices charged to competitive LECs for access to the data-portion of shared lines need only be fair and nondiscriminatory. Specifically, incumbent LECs should be permitted to charge no more to competitive LECs for access to shared lines than they impute to themselves for their own competing services. Today, incumbent LECs have chosen to allocate no loop costs to the data side of shared loops in their own retail services.[40] If the incumbent LECs wish to allocate costs in this manner in setting the price for their own DSL services, then the statutory requirements of nondiscrimination mandate that competitive LECs be provided access on the same terms. It is important to note in this regard that, regardless of the precise allocation of costs between the incumbent voice service and competitive LEC access to the shared line, incumbent LECs will continue to recover the full cost of the loop. Accordingly, requiring that incumbent LECs permit competitive LEC access to shared loops even at no charge – either through expanded interconnection or as an unbundled element – will leave the incumbent LECs whole.

a) The Commission Should Impose Pricing Requirements for DSL Expanded Interconnection

[40] *See Advanced Services NPRM* at n. 226.

Prices for DSL expanded interconnection should be set to eliminate the DSL price squeeze. In the *Special Access Expanded Interconnection Order*, the Commission adopted specific requirements for the cost showings for expanded interconnection services. In particular, the Commission required the LECs "to develop and justify consistent methodologies for deriving the direct costs of providing similar types of new offerings."[41] Expanded interconnection rates are excluded from the LECs' price cap baskets, and must be supported by a cost showing required by section 61.38 of the Commission's rules.[42] Similar requirements are warranted for DSL expanded interconnection.

As with expanded interconnection for special access and switched access, pricing of the arrangements made available to competitive LECs will be critical to the success of this policy. As the Commission found in the *Special Access Expanded Interconnection Order*, "the main risk here is that LECs will seek to overprice the services used by competitors in order to deter entry."[43] Allowing incumbent LECs to price flexibly in this instance is likely to result in inflated prices for interconnection that prevent competitive LECs from offering DSL services at prices that can match the retail DSL prices of incumbent LECs. Therefore, NorthPoint suggests that the Commission impose pricing requirements similar to those established for the *Special Access Expanded Interconnection Order*. The Commission should use as benchmarks the LEC cost components as reflected in their tariffs. If the access rates charged by incumbent LECs to competitive LECs for different components of expanded interconnection for DSL (e.g., loops, cross connects, splitter functionality) exceed the costs

---

[41] *Special Access Expanded Interconnection Order* at ¶ 127.

[42] 47 C.F.R. § 61.38. *See Special Access Expanded Interconnection Order* at ¶136.

[43] *Special Access Expanded Interconnection Order* at ¶ 129.

documented in the cost support that accompanied the incumbent LEC DSL tariffs, such discrimination would violate section 202 of the Act. The Commission should also clarify that Section 202 applies not only to the initial rates, but also to DSL related rates and DSL expanded interconnection rates on an ongoing basis.

b) The Commission Should Establish Pricing guidelines for the Line Shared Unbundled Network Element

Pricing for the unbundled shared line access network element should also be determined in a manner that addresses the DSL price squeeze. While unbundled network element prices are generally set by the states, the Commission in the *Local Competition Order* concluded that it has jurisdiction to establish national pricing guidelines. The Supreme Court affirmed that jurisdiction in the *AT&T Corporation v. Iowa Utilities Board* case.[44] It is especially important that the Commission take an active role in establishing pricing guidelines for the shared-line DSL UNE. Because the Commission has found incumbent LECs' DSL offering to be an interstate special access service,[45] and because the relationship between the pricing of the unbundled network element and the retail service is so important to fostering competition for DSL services, the Commission should provide specific guidance to the states to assist them in making pricing determinations for DSL as an unbundled network element, pursuant to section 252 of the Act.

In the *Local Competition Order*, the Commission determined that Total Element Long Run Incremental Cost (TELRIC) was the appropriate pricing standard for unbundled

[44] *AT&T Corp. v. Iowa Utilities Bd.*, 119 S.Ct. 721 (1999).

[45] *In the Matter of GTE Telephone Operating Cos.*, GTOC Tariff No. 1, GTOC Transmittal No. 1148, Memorandum Opinion and Order, CC Docket No. 98-79, 13 FCC Rcd 22466 (1998).

network elements.[46] In order to facilitate the prompt delivery of competitive LEC DSL over shared lines to consumers, the Commission should require states to set prices for access to the shared-line UNE that do not exceed the costs set forth in the incumbent LECs' DSL tariffs. This approach is administratively simple and also protects against discrimination. Specifically, incumbent LECs currently offer DSL pursuant to interstate tariff.[47] In those tariffs, the incumbent LECs have identified the costs for DSL line sharing as nominal. Because incumbent LECs' proposed cost methodologies were advanced in the absence of a line sharing obligation, they can be presumed reasonable – that is, not motivated by an incentive to inflate the cost of comparable UNEs. To ensure that this rational pricing scheme is not distorted when applied to competitive LECs, NorthPoint recommends that states be directed to use as a ceiling for the cost of DSL shared-line UNEs the same loop cost that an incumbent LEC allocates to its own DSL retail offering, as documented in the cost support information submitted with its tariff.

In the *Advanced Services NPRM,* the Commission seeks comment on the effect of line sharing on federal and state access charge regimes and universal service.[48] In general, the pricing of unbundled network elements has not affected the pricing of related retail services. For example, dedicated and shared transport unbundled network elements are provided over the same facilities as special access and switched transport, but the

---

[46] *Local Competition First Report and Order* at ¶ 672.

[47] *See, e.g.,* The Bell Atlantic Telephone Companies Tariff F.C.C. No. 1, Infospeed Digital Subscriber Line Service, Transmittal No. 1076 (September 1, 1998); Pacific Bell Telephone Company, Tariff F.C.C. No. 128, Transmittal No. 1986 (June 15, 1998) (Asymmetrical Digital Subscriber Loop).

[48] *Advanced Services NPRM* at ¶ 106.

Commission has not modified prices of special or switched transport as a result. Consequently, there is no reason to reopen questions relating to access or universal service.

III. SPECTRUM COMPATIBILITY AND MANAGEMENT POLICY MUST ADVANCE THE GOALS OF THE ACT AND THE COMMISSION

The Commission should maintain oversight of spectrum policy to ensure that incumbent LECs and standards bodies do not thwart the goals of the Act by imposing spectrum policies that defeat innovative services offered by new entrants. The Commission must, for example, establish the significant degradation test as both the short and long-term test for spectrum compatibility and management policy. Further, rather than deferring to incumbent LECs or to industry bodies that either do not share or are not charged with advancing competition and facilitating innovation, the Commission should appoint an independent body to develop, implement, and administer spectrum policy in a manner that is open, nondiscriminatory, and participatory, and balances the Commission's sound goal of promoting innovation and new services while protecting existing services from harmful spectrum interference.

These issues are not abstract. As recently as the week of June 7-10, 1999, the T1E1.4 subcommittee of ANSI met to consider further revisions to draft spectrum guidelines. Three contributions from competitive LECs, including NorthPoint, that sought to further discussion about certain assumptions that unduly promoted incumbent LEC services at the expense of competitive LEC services, including one that specifically urged T1E1.4 to account for the Commission's "significant degradation" test, were set aside. T1E1.4 continues to pursue draft spectrum guidelines that would constrain or eliminate new services without regard to the Commission's primary goals or the significant degradation test. (See III.B.2, *infra*.)

One of the primary goals of the Act is to encourage innovation and investment in new technologies, including advanced services.[49] In furtherance of this goal, the Commission's *Advanced Services Order and NPRM* appropriately established spectrum compatibility and management rules (hereafter "spectrum policies") that will guide the industry toward the deployment of ubiquitous advanced services. Specifically, the Commission concluded that such policies must aim "both to foster competitive deployment of innovative technologies and to ensure the quality and reliability of the public telephone network."[50] The Commission sought comment on means to "distinguish between legitimate claims that particular services, technologies, or equipment create spectrum interference and claims raised simply to impede competition."[51] Ultimately, any spectrum policies must "foster pro-competitive use of the loop plant by incumbent LECs and new entrants, while providing necessary network protection."[52] Thus, rather than to permit the incumbent LECs to impose spectrum policies, or permitting unnecessarily restrictive policies that might impede innovation, the Commission properly has directed its focus to preventing and remedying cases of "actual" interference to ensure against harm from a variety of technologies.[53]

Applying these rules, the Commission determined that the appropriate test for the deployment of new technologies and services should be whether such technologies or services cause actual and "significant degradation" to other services.[54] NorthPoint supports

---

[49] *See* Preamble to Telecommunications Act of 1996, 47 U.S.C. §§151 *et seq.*

[50] *Advanced Services Order and NPRM* at ¶ 63.

[51] *Id.* at ¶ 62.

[52] *Id.* at ¶ 62 (emphasis added).

[53] *Id.* at ¶ 79.

[54] *Id. passim.*

the Commission's "significant degradation" test as a model for *both* short and long term spectrum policy. This test not only ensures that new technologies will not be withheld from consumers by artificial or speculative claims of interference, it also allows that cases of *actual* interference will be remedied and considered in developing longer-term guidelines.

Applying the significant degradation test, the Commission concluded that the following loop technologies should be deemed "presumed acceptable" for deployment:

- Any loop technology that complies with existing industry standards;
- Any loop technology that has been successfully deployed by any carrier without significantly degrading the performance of other services; and
- Any loop technology that has been approved by the Commission or any state commission. (*Advanced Services NPRM* at ¶¶ 66 - 67).

These established technologies, both before and after the Commission's interim ruling, have been, and continue to be deployed, without incident, vindicating the Commission's tentative conclusion that a "significant degradation" test is sufficient to prevent actual interference and disruption of services in the network.

The guidelines in the *Advanced Services NPRM*, as recognized by the Commission, are merely a starting place for the industry, and "in the long term, more comprehensive technical standards and practices must be developed." (*Id.* at ¶78.) NorthPoint agrees that long-term standards must be developed. Nevertheless, NorthPoint supports the view that the Commission should establish the significant degradation test as the linchpin for any long-term spectrum policy, and this test must be incorporated into any final process or rules permitted by the Commission.

A. Application of the Commission's "Significant Degradation" Test Best Advances the Goals of the Act and the Commission

The *Advanced Services NPRM* established "significant degradation" as the test for whether a technology may be deployed. The Commission tentatively defined significant degradation as interference that "noticeably impairs a service from a user's perspective."[55] This test will best facilitate the deployment of a "variety of xDSL-based services in a nonrestrictive manner" by looking not to a theoretical potential for interference, but to "actual level[s] of interference between technologies to determine what technologies are deployable and under what circumstances."[56] By focusing on the end user's perception, the significant degradation test balances the interest in promoting new technology with the protection of existing services.

Application of the significant degradation test to certain classes of service yields useful presumptions for resolving spectral compatibility issues and advancing spectrum policy. Specifically, application of the test reveals that there should be three classes of technologies for purposes of spectrum policy and for resolving spectrum conflicts: (1) established technologies that are presumed acceptable for deployment; (2) non-established technologies that are not presumed acceptable for deployment; and (3) certain special classes of technologies that, because of an established high propensity to interfere or a high susceptibility to interference, may appropriate be segregated under fair and nondiscriminatory binder management guidelines.

[55] *Id.* at ¶ 66, n. 166 (emphasis supplied).

[56] *Id.* at ¶ 79.

1. Established Technologies

The Commission should define "established technologies" as those technologies that have been approved by a standards body, approved by a regulatory commission, or successfully deployed in any jurisdiction for a period of at least six months without causing significant degradation to other services. The Commission should conclude that a competitive LEC seeking to deploy a technology classified as "established" may not be precluded from doing so by an incumbent LEC. Long-term spectrum policy should preserve the same presumption of acceptability for established technologies.[57]

2. New Technologies

New technologies should be subject to a "test and see" process that ensures nondiscriminatory examination of the impact of deployment of these on other services. In the *Advanced Services NPRM*, the Commission noted that the universe of established technologies – *e.g.*, those that are successfully deployed, standardized, or approved by a Commission or standards body – do not constitute the "upper limit" on what technology is deployable.[58] Rather, innovative providers, including incumbent LECs, should be free to deploy new technologies.

To "encourage innovation and allow for more rapid deployment of [these] new technologies," the incumbent LECs should be required to permit the deployment of new

[57] NorthPoint supports longer-term adoption of the Commission's interim rule for established technologies that would require any party claiming significant degradation as the result of such technology to undertake the burden of demonstrating that such service should be constrained or removed on a case-by-case basis. *Advanced Services NPRM* at ¶ 68.

[58] *Id.* at ¶ 70.

technologies on a "test and see" basis.[59] "Test and see" would permit a competitive LEC to deploy technologies in any state for a period of up to six months. During that period, the incumbent LEC and the provider of the new service would be required to keep an inventory of new services and monitor for harmful interference, if any, caused to or by other established services. If the new service emerges from any "test and see" trial without substantial evidence of significant and actual degradation to, or by, other services, then it the service could be deployed in the future as an "established" service – one presumed to be acceptable for deployment.

Incumbent LECs should be required to disclose publicly any trials of new technology in their network. Public disclosure of technology trials, including the specifications of the technology, the manufacturer, the wire-centers and users to whom the services will be trialed, will permit other services and providers to monitor the incumbent LEC's "test and see" trial to protect against, and report, possible interference.

Technologies that are deployed in a "test and see" trial and are determined not to cause any actual and significant degradation for a six-month period should be deemed "successfully deployed." Permitting new technologies first to bear the burden of demonstrating their viability, and then to migrate to "successfully deployed" status, will encourage innovation and the delivery of new services without imperiling existing services. Further, by permitting the process to be managed (subject to Commission guidelines) by the parties who are deploying the technology, it will establish a procedure that does not rely on Commission intervention.

---

[59] *Id.* at ¶ 71.

3. Certain Special Services May Be Managed Appropriately to Advance Nondiscriminatory Spectrum Policies

In the *Advanced Services NPRM*, the Commission sought comment on how the Commission should resolve claims of spectrum interference between carriers, particularly with regard to specific technologies that have a propensity to interfere, like AMI T-1.[60] If it is feasible to do so on a nondiscriminatory basis, well-known disturbers and overly sensitive DSL technologies, may, in the event of spectrum compatibility conflicts, be segregated into separate binders to permit their continued deployment without limiting other technologies.

The *Advanced Services NPRM* requested comments on this process with regard only to "disturbers," identified as "a service that significantly degrades another service."[61] While it is true that certain technologies like AMI T-1 are known to interfere more than others, there are some overly sensitive technologies, the introduction of which would limit the deployment of innovative DSL technologies. Such "hyper-sensitive" technologies and known disturbers should be treated similarly, and where appropriate to preserve their deployment at specified levels, segregated from the other traditional and DSL technologies (*i.e.,* binder managed).

Special service classification should be reserved for those particularly disturbing or hypersensitive technologies to which such practices have previously been, or have proposed to have been, applied. Because all technologies interfere somewhat (some more than others) and all technologies are susceptible to interference from other services (some more than others), the Commission should be cautious to avoid making this category over-inclusive or

[60] *Advanced Services NPRM* at ¶ 88

[61] *See Advanced Services NPRM* at n. 179.

to adopt rules that result in service-binder balkanization. Such binder balkanization could, as noted in the *Advanced Services NPRM*, perversely result in limiting the deployment of new services by depleting appropriate loop binders.[62] Thus, binder management, if implemented on a nondiscriminatory basis, is an appropriate method to minimize the impact of the high disturbers like AMI T-1 and to protect hypersensitive technologies like ADSL, both of which are either actively segregated or have been proposed to be segregated by a number of incumbent LECs.

Limited binder management of certain special services may render unnecessary, or slow the pace at which providers are required to discontinue the deployment of, AMI T-1 or other known disturbers.[63] Similarly, binder segregation of certain hypersensitive technologies with an unusually low tolerance for interference from existing services, such as extremely high-bit-rate deployments of ADSL,[64] will permit the deployment of those services at high performance levels without unreasonably constraining or disallowing the deployment of other more robust technologies that can share binders. Thus, binder management may be an effective tool to maximize the utilization of the network, provided that it is administered on an efficient and nondiscriminatory basis.

Whether and to what extent to permit binder management of T1 and certain ADSL services should be permitted or required is a central policy decision which, like other

---

[62] *See id.* at ¶ 86 (noting competitive LEC concerns about incumbent LEC "binder management" initiatives).

[63] *See Advanced Services NPRM* at ¶74.

[64] ADSL does <u>not</u> require binder management, nor is it susceptible to interference from other services (including high-bit rate symmetric DSL) at speeds currently tariffed by the incumbent LECs. Because high rate ADSL (at speeds approaching 6.0mbps) has severe distance limitations, it is unlikely that such services will ever be deployed very broadly.

spectrum policies, should not be left to the incumbent LECs or "unchaperoned" standards bodies. These types of policy decisions must be resolved in a manner that is neutral, fair, and nondiscriminatory, and consistent with the goals of the Act. Accordingly, as set forth below, NorthPoint urges the Commission to take an active role in establishing and overseeing a process for the development and implementation of spectrum compatibility and management guidelines that closely adhere to the Commission's "significant degradation" test and the broader goals of the Act.

B. The Commission Should Oversee Spectrum Policy Development, Implementation and Administration.

In the *Advanced Services NPRM*, the Commission tentatively concluded that any process for establishing spectrum policies should not be deferred to the incumbent LECs; it should be competitively neutral,[65] directed toward investigating actual levels of interference between services,[66] must enjoy the active participation of the LEC industry, equipment suppliers, and the Commission, and should utilize procedures that assure equal representation and the absence of *de jure* or *de facto* "veto" authority.[67] NorthPoint agrees.

It is essential that the Commission reassert its authority and its policy to manage spectrum issues against a test of significant degradation. Despite the Commission's issuance of interim rules to apply the significant degradation test as the benchmark for spectrum policies, incumbent LECs and industry standards bodies – particularly T1E1.4 – persist in pursuing spectrum guidelines and standards that bear *no relation* to the Commission's goals

[65] *Id.* at ¶ 79.

[66] *Id.*

[67] *Id.*

or to the significant degradation test. As discussed below, NorthPoint urges the Commission to ensure that any process or rules for spectrum policy be consistent with the goals of the Act by retaining Commission authority and oversight over spectrum policy. In this regard, existing bodies, such as T1E1 – Telecommunications Committee, that are not subject to the Commission's statutory mandates and not seek to maximize the availability of innovative services, should *not* serve as an ultimate arbiter of spectrum policy. Rather, the Commission should establish, in a manner similar to its establishment of the North American Numbering Council (NANC), an appropriate forum to develop, implement, and oversee spectrum policy with the input of industry bodies (including T1E1), industry participants, vendors, and the Commission that will preserve the Commission's ultimate authority to resolve policy issues that are so central to achieving the goals of the Act.

1. *Spectrum Policy Must Be Consistent With the Goals of the Act, Be Broadly Representative, Nondiscriminatory, and Remain Under Commission Supervision*

Spectrum policies adopted by the Commission must be consistent with the goal of maximizing usage of the network, must not favor particular carriers, services, vendors, or particular market segments, and should mitigate actual and significant degradation in the network.[68] Accordingly, the Commission should exercise its jurisdiction over the standards

[68] *See,* Section 256(a)(1) of the Telecommunications Act of 1996 (the "Act") which requires the Commission to "promote nondiscriminatory accessibility by the broadest number of users and vendors of communications products and services to public telecommunications networks used to provide telecommunications service...."

development process to help facilitate ubiquitous advanced service deployment and to reject any processes, guidelines, or policies that impede these goals.[69]

In this regard, NorthPoint agrees that it is necessary and appropriate to remove unilateral decision-making authority from the incumbent LECs. Because of the significant potential for the misapplication of spectrum policy to frustrate innovation and the goals of the Act,[70] the Commission should actively oversee the development, implementation and application of any spectrum policies. Accordingly, NorthPoint disagrees with the Commission's tentative conclusions, stated in the *Advanced Services NPRM*, that it is appropriate to defer to such standards bodies as T1E1 for the development of national spectrum policy.

2. The Commission Should Not Delegate Its Authority over Spectrum Policy to T1E1 or Other Industry Standards Organizations

The Commission is obligated, pursuant to section 256(a)(1) of the Act, to promote non-discriminatory access to the broadest array of users and vendors of telecommunications products in the network. This duty may only be delegated to a body that shares and promotes the goals in Section 256 and the Act generally. *Id.* at 256(a)(2). Because Committee T1E1 is neither charged with maximizing the range of services in the network, nor develops its spectrum recommendations to a standard that is compatible with the Commission's test of

[69] *See* Section 256(b) of the Act, which *requires* the Commission to establish procedures to facilitate achievement of the goals articulated in Section 256(a)(1), and which *permits* the Commission to participate in industry standards bodies for the purpose of promoting, among other things, "access to public telecommunications networks used to provide telecommunications services."

[70] *Advanced Services NPRM* at ¶ 62 (incumbent LEC use of spectrum "rules" to impede competition); ¶ 81 (T1E1 may be prone to advancing disproportionately incumbent LEC

(cont'd)

significant degradation, it would be inappropriate for the Commission to defer to T1E1 for the development, implementation or administration of national spectrum policies.

Although T1E1 (and working group T1E1.4) have expertise in the area of developing and comparing power spectral density masks and related models that serve as proxies for interference studies, it should not be given authority to oversee spectrum policy.

T1E1 is not sufficiently representative of the industry. As suggested in the *Advanced Services NPRM*, there is a need for "broader representation and participation in the standards bodies."[71] Smaller carriers with limited resources often cannot dedicate the personnel to monitor and participate regularly in the industry meetings. While NorthPoint now participates in T1E1 and encourages other data competitive LECs to participate, incumbent LECs continue to dominate T1E1, its priorities, and its administration.

T1E1 is not charged to, and does not pursue, spectrum recommendations that, advance or share the goals of the Act or the Commission. For example, the *Advanced Services NPRM* clarified that any loop technology that has been successfully deployed in any market without "significantly degrading" other services is presumed acceptable for deployment. In contrast, working group T1E1.4 has developed standards principally designed to avoid – at substantial cost to innovative services – "potential degradation" of "guarded" (incumbent-LEC-favored) services. Specifically, T1E1.4 has been asked by incumbent LECs and their vendors (and appears prepared to concede) that ADSL be "guarded" at exceptionally high levels of performance that can only be achieved in an

---

interests).

[71] *Advanced Services NPRM* at ¶81.

unrealistically "interference-free" binder environment.[72] Consequently, non-guarded, innovative services would be disallowed or constrained to preserve an artificially low noise requirement needed to protect "guarded" incumbent LEC technologies. Rather than allowing discussion whether "guarding" one technology at the expense of a variety of competing technologies is appropriate policy, T1E1's most recent spectrum policy draft begins with the assumption that innovative services should always defer to "guarded" ADSL specifications regardless of the consequences.[73] According to the T1E1.4 draft guidelines, such "legacy" services (and services anticipated to be broadly deployed by the incumbent LECs) automatically "trump" innovative services offered by new entrants. Such a policy is neither consistent with the Act or the Commission's goals, nor appropriately set by a standards body not subject to direct Commission oversight.

T1E1 also fails to adhere to the Commission's directive to prevent and resolve *actual and significant* interference in a manner that maximizes the deployment of new technologies.

---

[72] In order to sustain its target bit rate of more than 6.0 mbps, ADSL requires a bandwidth/signal to noise ratio that far exceeds other services – HDSL, HDSL2, high-speed SDSL – that share binders in the network. One contribution to T1E1.4, sponsored by Conexant, Copper Mountain and NorthPoint, proposed that "all guarded systems should be treated equally or at least none of the systems should be overly guarded. The guarding level [of bandwidth signal to noise] for any systems should not be over 20." T1E1.4/99-349. This contribution was tabled.

[73] *See* T1E1.4: Spectrum Compatibility for Twisted-Pair Loop Transmission Systems, Draft T1E1.4/99-002R3 at 8

4.3.1 Guarded loop services and technologies – PA 3/99 Revised PA 4/99

> This standard defines certain guarded loop services and technologies. Guarded systems are defined as loop transmission systems with which the DSL spectrum management classes defined in this standard, and other new loop transmission systems, are required to demonstrate spectral compatibility. The guarded systems defined in this standard are legacy systems that have been deployed in high numbers as well as standards-based DSL systems that are expected to be deployed in high numbers in the near future.

Instead, T1E1.4 analyzes spectral compatibility in a "worst case" model that bears no relation to actual deployment or field interference and unduly restricts new technology. For example, in its draft spectrum guidelines, T1E1.4 supposes a deployment of 20-24 high-bit-rate symmetric DSL loops per 50 pair binder as the "test bed" for gauging interference with ADSL, a model that assumes an almost stratospheric level of DSL deployment and is, in the end, mathematically impossible to achieve.[74] Proposals by non-incumbent LEC participants at T1E1.4 to modify this, as well several other implausibly conservative assumptions and instead to conform the analysis to the Commission's significant degradation test and the goals of the Act, have been dismissed and excluded from consideration in the evolving draft.[75] This illustrates that T1E1.4's approach to spectrum policy has failed to keep pace with the pro-competitive goals, policies and landscape that now adhere as a result of the Act.

As evidenced by its current undertakings, T1E1 is not an appropriate forum for the development of nondiscriminatory and pro-competitive spectrum policies. Rather, the

---

[74] T1E1.4's "worst case" scenario assumes that 40% of the loops in a binder are not only DSL, but high-bit-rate SDSL. Real world deployment figures demonstrate this assumption to border on ridiculous. TeleChoice estimates that DSL deployment will approach 2,000,000 lines by 2001, only 15% (or 300,000) of which are competitive LEC lines, of which only a subset (about 50%) are SDSL, and of which a further subset (about 10%) are high-rate SDSL. Thus, contrary to T1E1.4's "worst case" assumption of 40% high-bit-rate SDSL disturbers, actual 1.5 mbps SDSL penetration by 2001 could not exceed 0.01%. T1E1.4's "worst case" would have the Commission constrain this service unnecessarily.

[75] *See Deployability and Spectrum Compatibility*, offered by AT&T, No. T1E1.4/99-350, Conexant, Covad, Copper Mountain, Metalink, Nokia, NorthPoint, Rhythms, *Proposal for Reconsidering Cross-talk Environment in Method B*, No. T1E1.4/99-349, offered by Conexant, Copper Mountain, NorthPoint, and *Proposal for Reducing ADSL Target Data Rate*, No. T1E1.4/99-351, offered by Conexant, Copper Mountain, NorthPoint. These proposals noted that T1E1.4 has permitted a number of underlying assumptions to advance without adequate scrutiny, including the Unger Model for estimating PSD, unbalanced bandwidth/signal:noise ratios in the deployment of "guarded" compared to "unguarded" DSL technologies, and the failure to account for actual deployment patterns in assuming "worst case" interference. These contributions are available at http://www.t1.org/index/0346.htm.

Commission should establish an independent process to set such policies, and T1E1.4's recommendations, along with those of other industry participants and the Commission's experts, should be considered in the development, implementation and administration of national spectrum policies under FCC auspices.

3. The Commission Should Appoint An Advisory Committee Modeled On The North American Numbering Council

NorthPoint supports the Commission's suggestion that it look to its creation of the North American Numbering Council ("NANC") as a model to develop long term spectrum policies and to create an ongoing structure to support such policies.[76] The FCC established NANC through the Federal Advisory Committee Act ("FACA"),[77] to "advise it and make recommendations, reached through industry consensus, that foster efficient and impartial number administration."[78] The FACA , as well as Section 256 of the Act, provides the FCC with the statutory authority to create a similar structure dedicated to investigating, developing and administering spectrum policy in a way that advances the goals of the Act.

NANC is an appropriate model for the establishment of a spectrum policy body. Many of the principles NANC adopted to create and implement numbering policies also could govern the establishment of spectrum policy. For example, one of NANC's goals is to provide a structure for number administration that is impartial and pro-competitive; maintains and fosters an integrated approach to number administration throughout North

[76] *Advanced Services NPRM* at ¶89.

[77] Federal Advisory Committee Act, 5 U.S.C., App § 4(a) and § 3 (2)(C).

[78] "Amended Charter for the North American Number Council" Section B. *See also, In the Matter of Administration of the North American Numbering Plan*, CC Docket No.92-237, Report and Order, FCC 95-283 (July 13, 1995).

America; and corrects the deficiencies of the industry-led efforts in number administration, while maintaining the positive aspects of those efforts.[79] These goals apply equally to the development of spectrum policies.[80]

NANC's reporting and oversight structure is also an appropriate model for development of a body to guide spectrum policy. For example, NANC was directed by the FCC to ensure that its membership was well balanced and included representatives from every sector of the telecommunications industry. Multiple carrier groups, vendors, state commissions and standards setting organizations participate in NANC committees. Most importantly, however, the FCC has maintained a clear role of authority within the NANC structure. NANC only works on issues expressly delegated to it by the FCC. Due to its many relevant similarities, the FCC should use the NANC structure as a model to develop and administer competitively neutral spectral compatibility and management rules.

NorthPoint recommends that the Commission adopt a structure similar to NANC for the development, implementation and administration of long-term spectrum policy consistent with the significant degradation test and the broader, pro-competitive and deregulatory goals of the Act.

---

[79] "Summary of Commission Action Regarding Administration of the North American Numbering Plan" NANC website, http://www.fcc.gov/ccb/NANC/nanpsumm.html.

[80] Several other of NANC's policy objectives match the requirements for creating spectrum policy: facilitating entry into the communications marketplace by making [numbering] resources available on an efficient, timely basis to communications service providers; not unduly favoring or disfavoring any particular industry segment or group of consumers; and not unduly favoring one technology over another. *See* Amended Charter for the North American Numbering Council.

IV. CONCLUSION

For the reasons stated, the Commission should promptly implement a national requirement that incumbent LECs permit competitive LEC access to the DSL portion of shared lines with incumbent LEC voice services and should institute a process for the development, implementation and administration of a nondiscriminatory spectrum policy that conforms to national pro-competitive goals.

DATED: JUNE 15, 1999 **RESPECTFULLY SUBMITTED,**

STEVEN GOROSH
MICHAEL OLSEN
GLENN HARRIS
NorthPoint Communications, Inc.
222 Sutter Street, 7th Floor
San Francisco, CA 94108
415/403-4003

RUTH MILKMAN
The Lawler Group, LLC
1909 K Street, NW
Suite 820
Washington, D.C. 20006
202/ 777-7700

Line-shared DSL

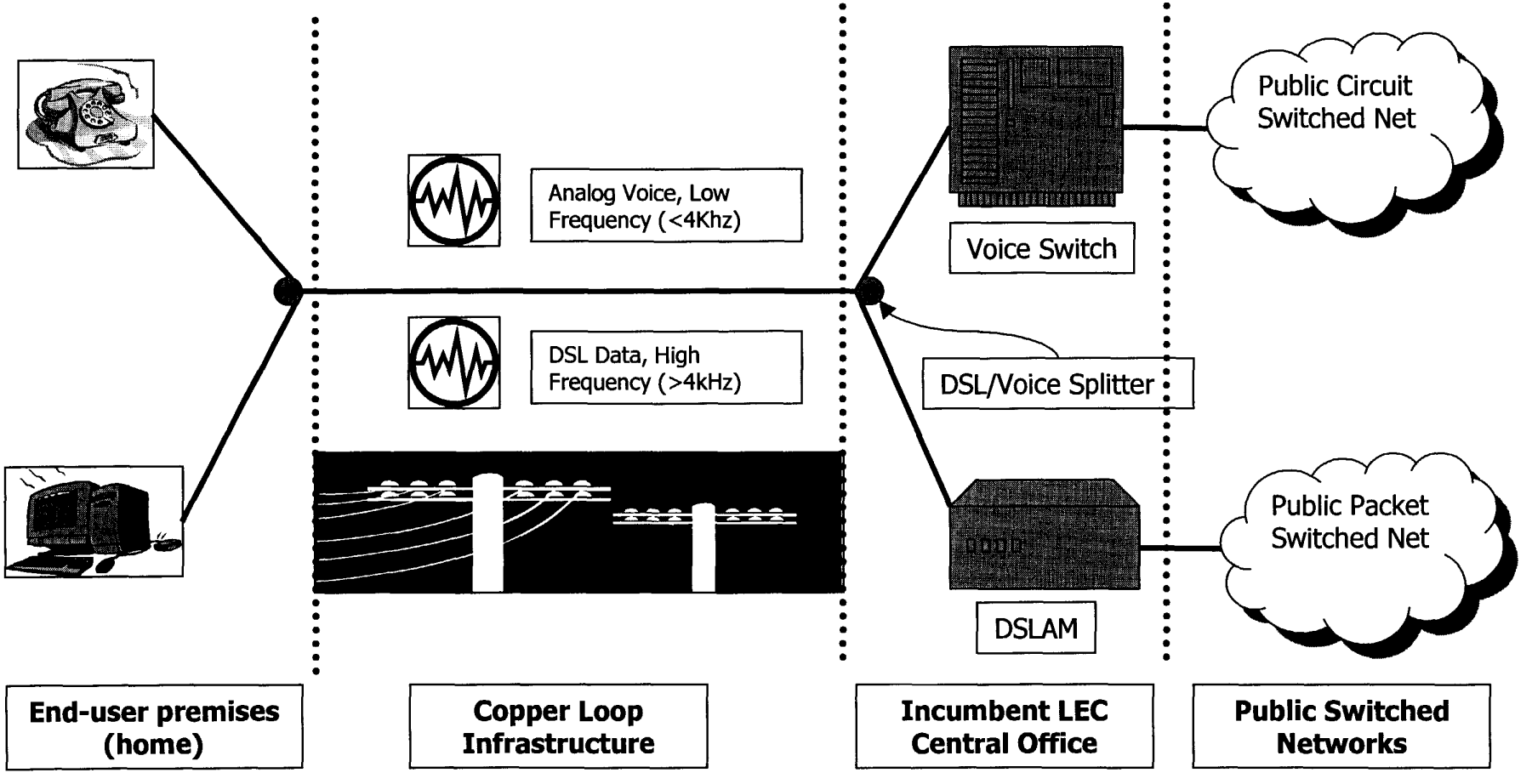

Attachment No. 1

Line-share CO operations

- Operationally identical to ILEC implementation of its own ADSL offering

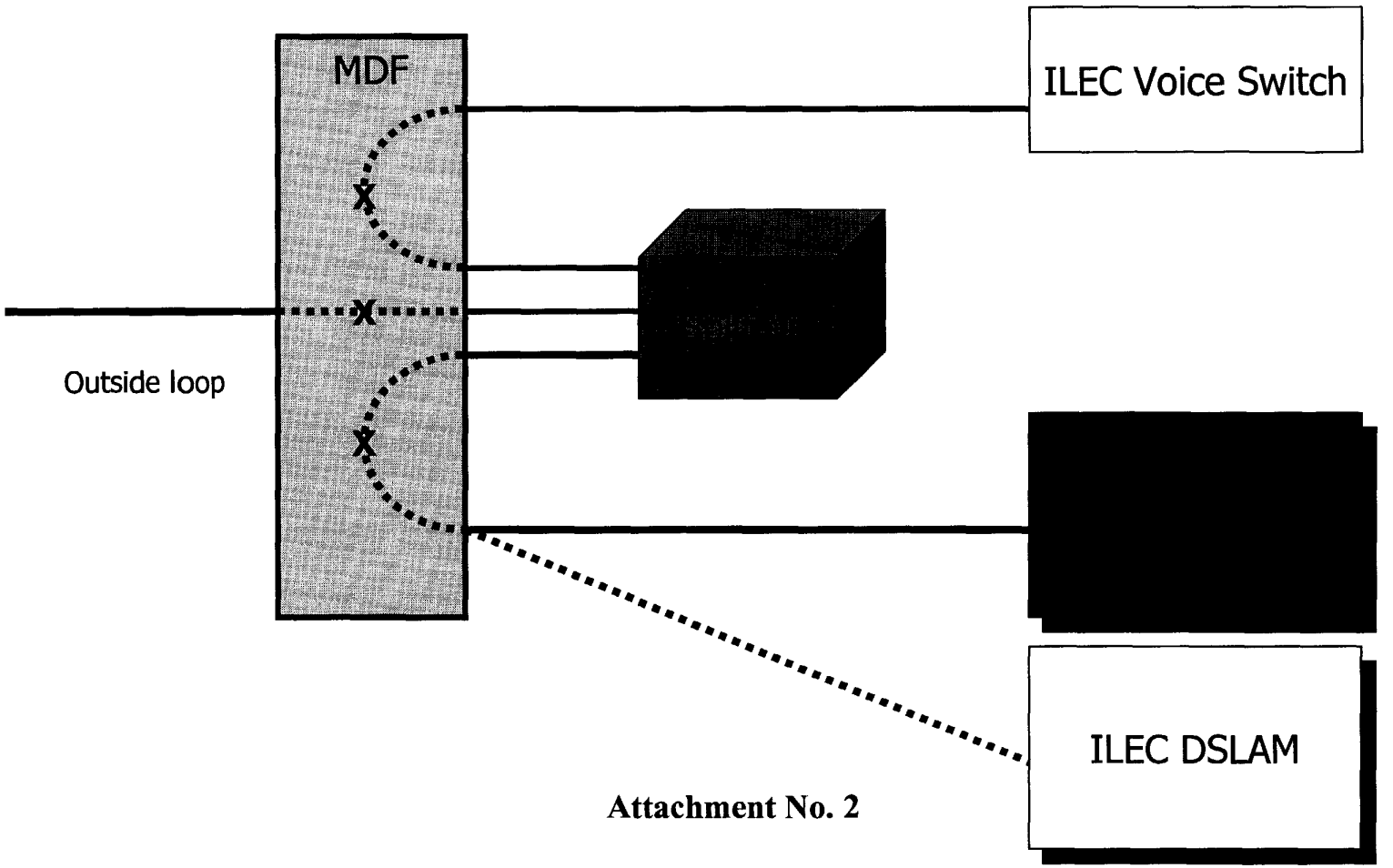

Attachment No. 2

CERTIFICATE OF SERVICE

I, Ruth M. Milkman, do hereby certify that on this 15th day of June, 1999, I caused a copy of the foregoing Comments of NorthPoint Communications, Inc. to be served upon each of the parties listed on the attached Service List by messenger.

Ruth M. Milkman

SERVICE LIST

Magalie Roman Salas (Orig. & 12 copies) Secretary Federal Communications Commission 445 12th Street, S.W. Room TWB-204 Washington, D.C. 20554	Robert Atkinson Deputy Chief Common Carrier Bureau Federal Communications Commission 445 12th Street, S.W. Suite 5-B303 Washington, D.C. 20554
Kyle D. Dixon Legal Advisor Office of Commissioner Powell Federal Communications Commission 445 12th Street, S.W. Suite 8-A204 Washington, D.C. 20554	Jordan Goldstein Legal Advisor Common Carrier Bureau Federal Communications Commission 445 12th Street, S.W. Suite 5-B303 Washington, D.C. 20554
International Transcription Service 1231 20th Street, N.W. Washington, D.C. 20554	Linda Kinney Legal Advisor Office of Commissioner Ness Federal Communications Commission 445 12th Street, S.W. Suite 8-B115 Washington, D.C. 20554
Kevin J. Martin Legal Advisor Officer of Commissioner Furchtgott-Roth Federal Communications Commission 445 12th Street, S.W. Suite-A302 Washington, D.C. 20554	Carol Mattey Chief, Policy Division Common Carrier Bureau Federal Communications Commission 445 12th Street, S.W. Suite 5-C320 Washington, D.C. 20554
Janice M. Myles (1 copy & 1 disk) Common Carrier Bureau Federal Communications Commission 445 12th Street, S.W. Washington, D.C. 20554	Dorothy Atwood Legal Advisor Office of Chairman Kennard Federal Communications Commission 445 12th Street, S.W. Suite 8-B201 Washington, D.C. 20554
Michelle Carey Deputy Chief, Policy Division Common Carrier Bureau Federal Communications Commission 445 12th Street, S.W. Suite 5-C320 Washington, D.C. 20554	Larry Strickling Chief, Common Carrier Bureau Federal Communications Commission 445 12th Street, S.W. Suite 5-B303 Washington, D.C. 20554

Sarah Whitesell
Office of Commissioner Tristani
Federal Communications Commission
445 12th Street, S.W.
Suite 8-C302
Washington, D.C. 20554