I. INTRODUCTION

Several incumbent local telephone companies ("ILECs") have requested forbearance from regulation of special access services and dedicated switched access services ("interstate high capacity services") within certain geographic areas.[1] State-wide forbearance is requested in the case of Bell Atlantic (for 12 states), the Chicago LATA in the case of Ameritech, fourteen metropolitan statistical areas ("MSAs") in the case of SBC, and the Phoenix and Seattle MSAs in the case of US West.[2] Forbearance would allow the ILECs to engage in single customer contract pricing. The ILECs allege that competition is sufficiently developed within these particular geographic areas, making the consumer and competitive safeguards provided by tariff regulation unnecessary. This paper concludes that forbearance from regulation for the ILECs is premature.

---

[1] Section 10 of the Telecommunications Act provides

> "Notwithstanding section 332(c)(1)(A) of this Act, the Commission shall forbear from applying any regulation or any provision of this Act to a telecommunications carrier or telecommunications service, or class of telecommunications or telecommunications services, in any or some of its or their geographic markets, if the Commission determines that (1) enforcement of such regulation or provision is not necessary to ensure that the charges, practices, classifications or regulations by, for or in connection with the telecommunications carrier or telecommunications service are just and reasonable and are not unjustly or unreasonably discriminatory; (2) enforcement of such regulation or provision is not necessary for the protection of consumers; and (3) forbearance from applying such provision or regulation is consistent with the public interest
> ...
> In making the determination under subsection (a)(3), the Commission shall consider whether forbearance from enforcing the provision or regulation will promote competitive market conditions including the extent to which such forbearance will enhance competition among providers of telecommunications services. If the Commission determines that such forbearance will promote competition among providers of telecommunications services, that determination may be the basis for a Commission finding that forbearance is in the public interest."

[2] *See,* Petition of the SBC Companies for Forbearance, December 7, 1998; Petition of U S West Communications Inc, for Forbearance, August 24, 1998 and December 30, 1998, Petition of Bell Atlantic for Forbearance, January 20, 1999, and Petition of Ameritech for Forbearance from Dominant Carrier Regulation of its Provision of High Capacity Services in the Chicago LATA.

Three years after passage of the Telecommunications Act of 1996 ("1996 Act"), and over 10 years after the introduction of competitive special access services, the ILECs still retain substantial market power. Substantial market power is retained even in the segment of their business that has experienced the most significant competitive inroads – the provision of special access and dedicated switched access services.[3] Moreover, The ILECs already have considerable flexibility in the provision of these services. The presence of market power makes the ILEC request for forbearance from regulation a risky proposition. This paper reviews the state of competition in special access markets and describes how premature removal of the remaining tariff safeguards will reduce the potential for further competitive entry and expansion.

As noted above, forbearance would allow single customer contract pricing for special access services. From the point of view of a monopolist facing fringe competition, a discriminatory price cut favoring only those customers that have alternatives will always be preferred over a price cut available to all customers. From the point of view of public policy, a requirement that price cuts in response to fringe competition be made available to all customers of the dominant firm will leverage the benefits of competition beyond the very narrow scope of a competitive fringe in the early days of its development. This is because, under certain circumstances, a relatively small entrant market share can discipline the prices the incumbent charges to all of its customers if price discrimination is not allowed.[4] Conversely, the ability to engage in

[3] For the sake of simplicity, the remainder of the paper will refer only to special access services, but the arguments apply equally to dedicated switched access services.
[4] See Jerry A. Hausman, Gregory K. Leonard, and Christopher A. Vellturo, "Market Definition Under Price Discrimination," Antitrust Law Journal (1996) pp. 367-387.

price discrimination provides the incumbent with the ability to deny the benefits of competitive pricing to customers that have no alternatives.

Making services generally available under tariff does not eliminate the incumbent's ability to reduce prices in response to competition. However, premature removal of the tariff safeguard will harm consumers who have no competitive alternatives and in the process damage the prospects for competition to develop further. Even compromise measures are risky at this early stage of competition. For example, giving ILECs individual customer contract authority, but requiring them to maintain their existing tariffs is extremely risky. Contracting authority, even with tariffs in place, can allow strategic pricing of special access services. Customers could be migrated to contract services by degrading service quality of the general offerings, by making new technologies or services available only through contract, or by using the flexibility in the Commission's current price cap rules to raise the effective price of tariffed services.

Another compromise might involve allowing the contracts to be tariffed, thereby making the terms available generally. The Commission's experience with AT&T's Tariff 12 offerings, which were essentially single customer contracts reduced to tariff language, demonstrates that non-discrimination requirements were virtually unenforceable in this context.[5] Fortunately, by the time AT&T was given this authority interexchange carrier ("IXC") competitors were well established.

In theory, a general tariffing requirement prevents discriminatory prices. However, the history of the introduction of competition in telecommunications markets

over the last several decades is replete with examples of tariffed price cuts targeted at the incumbent's customers for whom competitive alternatives have recently become available. TELPAK and CENTREX are examples of targeted price reductions from the private line and local exchange markets where competitive alternatives arose. The historical lesson is that requiring ILECs to offer price reductions only through tariffs limits, but by no means eliminates, the ability to target price reductions to the customers that have alternatives. Oversight to ensure non-discrimination is necessary even when tariffs are required.

At some point regulatory safeguards will be unnecessary or counter-productive and should be removed. The necessary conditions for deregulation must include widespread availability of competitive facilities within LATAs. The ILECs argue that the CLECs have already installed significant capacity. However, within any reasonable geographic territory, that capacity is unavailable to a substantial number of customer locations. The market-opening provisions of the 1996 Act have only been in place for three years, and much remains to be done to implement and enforce the Act's requirements.[6]

The services are described and markets are defined in Section II. Section III describes the current state of competition in special access markets and discusses barriers to competitive entry and expansion. Section IV applies the economics of dominant firm pricing to special access markets. Section V describes the regulatory flexibility that has

---

[5] AT&T Communications, Revisions to F.C.C. Tariff No. 12, CC Docket No. 87-568, Memorandum Opinion and Order, 4 FCC Rcd 4932 (1989) ("*Tariff 12 Order*")

[6] Telecommunications Act of 1996, Pub. L. No. 104-104, 110 Stat. 56 (" 1996 Act"). The 1996 Act amends the Communications Act of 1934, 47 U.S.C. §§ 151 *et. seq.*

already been extended to ILEC special access services. The potential costs and benefits of premature deregulation are discussed in Section VI. Section VII reviews the history of AT&T deregulation. Deregulation "metrics" or "triggers" are discussed in Section VIII and the conclusions are in Section IX.

II. SERVICES, MARKETS, AND MARKET DEFINITION

This section describes special access services, the various providers of these services, and the markets in which these service providers compete.

A. Services

The ILECs are seeking regulatory forbearance for special access and dedicated access for switched services. There are a number of such services. Voice grade, digital data service, T1 and DS-3 are the most common. Each of these individual services comes with many ordering options. The complexity of the services and the variety of offerings provided are illustrated by the size of the tariffs. For example, the special access portion of U S West's FCC Tariff No. 5 contains hundreds of pages.[7]

Special access services are typically used to provide a dedicated circuit between an IXC and one or more IXC customer ("end user") locations. Either the IXC or an end-user customer may order the service. Special access may be preferred to switched access arrangements provided over the public switched telephone network ("PSTN") for a variety of reasons. Switched access services are priced substantially above cost and are charged on a minute of use basis, while a fixed charge applies to interstate high capacity

[7] *See,* U S West Tariff at http://tariffs.uswest.com:8000/eldocs/TARIFFS/FCC/FCC5/.

services.[8] An end user with a high volume of demand can save money by paying the fixed recurring cost of a special access circuit. Special access may also provide more reliable data service and redundancy not available through the PSTN.

Figure 1 shows a special access circuit from end user location "A" to special access customer location "X". The circuit is comprised of several individual rate elements. The end user is connected to the ILEC wire center with a channel termination ("CT"). At the wire center the CT might be multiplexed together with CTs from other end user locations and connected to an interoffice channel ("IOC") connected to the IXC's serving wire center ("SWC"). An entrance facility connects the customer with the IXC's SWC. Several IOCs destined for the customer might be hubbed (multiplexed together) at the IXC's SWC. In response to requests by competitors, the Commission required ILECs to unbundle special access services, allowing these rate elements to be purchased separately.[9] Non-recurring charges ("NRCs") for ordering and provisioning special access circuits are significant.

---

[8] *See, ex parte* letter from Joel E. Lubin, Vice President – Regulatory, AT&T to Magalie Roman Salas, Secretary, FCC, CC Docket No. 96-262, March 30, 1999.

[9] *See,* FCC, Transport Rate Structure and Pricing, CC Docket No. 91-213, Report and order and Further Notice of Proposed Rulemaking, 7 FCC Rcd 7006 (192).

SPECIAL ACCESS

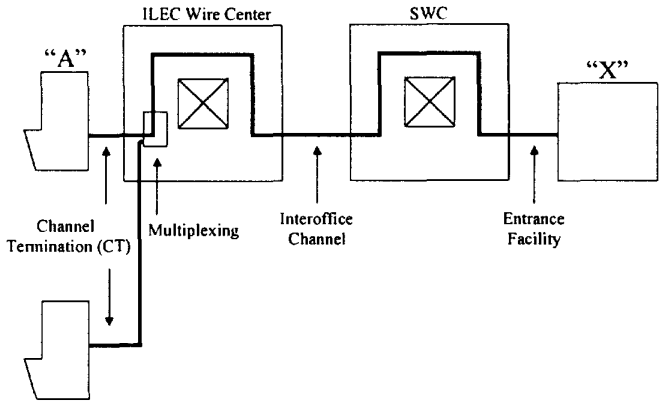

Figure 1
Elements of Special Access

B. Special Access Providers

Four types of firms provide special access. The ILECs, of course, are the dominant providers of these services. On the vast majority of point-to-point routes, and in many parts of the country, they are also the only providers. Beginning in the late 1980s, the competitive access providers ("CAPS") began to construct fiber ring facilities in the central business districts ("CBDs") of many urban areas in order to supply the IXCs and their customers with alternatives to ILEC provided special access services. Large IXCs have vertically integrated into the special access business in order to provide

dedicated circuits to their largest customers in certain parts of the country. In some cases, this integration has been accomplished through acquisition of CAPS.[10]

The fourth category of special access provider is relatively new. A number of CLECs have recently entered the telecommunications business in order to take advantage of the market-opening opportunities created by the 1996 Act. These firms hope to use unbundled network elements ("UNEs") or resale to provide a variety of services, including special access. Many of these CLECs have constructed fiber rings of their own and plan to expand their networks as a customer base is acquired through the use of UNEs. Unlike ILECs or IXCs, the non-integrated CAPs and new entrant CLECs are relatively specialized firms. They may concentrate on particular geographic regions or particular product niches.

In addition to competing with ILECs, the IXCs, CAPs and CLECs are also significant customers of the ILECs. For example, both IXCs and CLECs report that a very high percentage of their special access demand is satisfied through the purchase of ILEC circuits.[11] In some cases, the non-ILEC competitors may both compete with the ILEC and purchase from the ILEC to provide an individual circuit to a customer. An IXC may also self-provision entrance facilities and transport for an end-user special access circuit, but purchase multiplexing and channel terminations from the ILEC.

---

[10] AT&T acquired TCG while MCI acquired the local assets of Western Union. WorldCom acquired MFS and Brooks Fiber prior to acquiring MCI.

[11] *See,* Affidavit of Mark Shipley and David Rauschenberg, In the Matter of Implementation of the Local Competition Provisions of the Telecommunications Act of 1996, CC Docket Nos. 96-98, 99-70, filed May 24, 1999, filed with the Comments of Covad.

C. Special Access Markets

A market is defined as a place where buyers and sellers engage in trade. The outer limits of a market are determined by the degree to which alternatives are readily substitutable. The Department of Justice merger guidelines hold that a market exists for antitrust purposes if the participants in the market could, by colluding, raise prices by five percent and profitably maintain the price increase for one year.

Under this approach, the scope of the market may differ for different special access services. The effect of raising voice grade private line rates by five percent, everything else being equal, could lead to substitution away from voice grade services to switched services. In fact, dramatic changes in the voice grade special access market have been observed in the past as regulatory changes and ILEC strategic pricing behavior have lead to large reductions in the quantity demanded of voice grade special access services. Similarly, increases in T1 prices might lead to large increases in voice grade demand. A large IXC might be able to respond to a significant increase in entrance facility prices by constructing its own entrance facilities to the wire center that serves it.

Economists have long recognized that the initial level of prices affects the degree to which services are substitutes. If a service is already being sold well above cost, reflecting the exercise of market power, further price increases might well lead to substitution to other services, even if a price increase from the competitive price level would not.[12] In evaluating market boundaries for this and other purposes, the

[12] The "cellophane trap" refers to the Supreme Court decision in U.S. v. E.I. du Pont de Nemours and Co., 118 F. Supp. 41(1953), 351 U.S. 377 (1956) where high cross-elasticity of demand between cellophane and other packaging materials was used to prove that the market should be defined broadly. In fact, the high cross-elasticity could be evidence that cellophane was priced at monopoly levels.

Commission must be aware of this issue. To make this concrete, a five percent increase in T1 prices above current levels could lead to substitution of voice grade lines by some users and DS-3 by others, but only because T1 prices are already priced well above cost. Beginning the experiment with prices set at cost might not lead to significant substitution.

High capacity special and switched access are unlikely to be substitutes. Therefore, it makes sense to classify the high capacity special access as a market. It probably also makes sense to classify voice grade private lines as a separate market. Furthermore, since entrance facilities, channel terminations, interoffice channels and multiplexing are likely to be complements rather than substitutes, it makes sense to think of the individual rate elements of each of the special access services as markets as well.[13]

The geographic dimension of markets must also be considered. In general, special access circuits originate and terminate within LATAs. Defining special access markets to be LATA-wide, however, would be a mistake. Special access configurations are generally point to point. Special access competitors desiring to serve a particular end-user require facilities at both ends of the circuit and in between as well. An end-user in a particular building in a city center location may have multiple competitive alternatives available while a customer in a building a block or two away may not have alternatives available for some time. For example, a customer with a large production facility on the outskirts of the MSA may not have a viable competitive alternative available for the foreseeable future.

[13] Broadband wireless services are in their infancy, but may someday develop to challenge fiber based services, at least for some applications.

Some of the ILEC petitions have discussed resale versus wholesale markets and maintain that they have very small shares of the retail market. The significance they see in this is that they have allegedly lost customer control by virtue of the fact that their underlying wholesale services are being marketed to end users by others.[14] This assumed "loss" of share is not surprising given that the Regional Bell Operating Company ("RBOC") ILECs are precluded by the 1996 Act from offering interLATA services directly to these end-users. They have not "lost" market share due to competition from their special access customers for the business of end users. They do not serve retail interexchange customers due to the 1996 Act's retention of competitive safeguards in the Modification of Final Judgment ("MFJ"), which was a remedy in an antitrust case.[15]

These MFJ safeguards, which were retained in the 1996 Act, were designed to prevent the anticompetitive consequences that premature entry into the market would entail. Moreover, the alleged harm to the RBOCs in this situation – loss of customer contact – is certainly exaggerated. Given the low penetration of CLECs into retail local exchange markets, it is quite unlikely that the RBOCs have lost the customer contact.[16]

---

[14] It is instructive that in this context the ILECs do not see their wholesale special access customers as real customers. Instead, they seem to view CLECs and IXCs not as customers whose needs must be met in a competitive market, but as obstacles preventing direct sales to retail end users.

[15] U.S. v. A.T.&T., 552 F. Supp. 131 (D.D.C. 1882) ("MFJ").

[16] *See,* Industry Analysis Division, Common Carrier Bureau, Federal Communications Commission, Local Competition, December 1998. The Bureau found that "CLECs are gaining market share, but their presence remains less than 5% of the local market, as measured by total local service revenues." p. 1.

III. THE STATE OF COMPETITION

Market definition is a tool and not an end in itself. The end result of any market definition exercise is to determine the consumer welfare effects of specific governmental actions – decisions to regulate or deregulate or decisions to allow a merger, for example.

Evidence concerning market structure, conduct and performance can be used to measure the degree of competition within a market. Each of these three competitive metrics will be considered below.

A. Market Structure

The structure of a market is described by the number and size distribution of entrants, the height of entry barriers and the elasticity of demand.

1. Concentration

The size distribution of entrants can be measured along a number of dimensions including number of customers, revenues, number of circuits or capacity. No one of these alternatives is the "best" measure of competition. Each may provide valuable information about competitive conditions within the market. The measurement of revenues provides a relatively straightforward way of measuring the presence of competition. This puts all variables on an "apples to apples" basis.

ILEC economists place a great deal of emphasis on capacity, reasoning that a dominant firm will have difficulty raising prices if competitors have the ability to respond immediately. However, in this case, capacity provides a poor measure of the ability of competitors to discipline the pricing of a dominant firm. The problem is that circuit counts and capacity estimates present measurement difficulties.

First, given the cross-over points between voice grade and T1 and between T1 and DS-3 circuits, IXCs or their end user customers may prefer the larger capacity circuit even though they will not use all of the capacity. Ordering the equivalent number of the lower capacity circuits would be more expensive. Therefore, a high competitor circuit count could simply be an artifact of ILEC pricing.[17] Moreover, as discussed below, given that individual elements of special access services are complements, it is necessary to consider concentration for the link that shows the least degree of competition.

Second, there is no question that in the core centers of major metropolitan areas and some outlying suburban centers or business parks, CLECs have invested in significant fiber capacity. One reason for this is that fiber capacity comes in large lumps. A single strand of fiber, equipped with wave division multiplexing, is capable of carrying over 6,000 DS-3s. Another reason is that the fixed cost of installing the fiber suggests that excess capacity will be installed.[18] The "raw" capacity is significant but is highly location specific. Therefore, it is misleading to look at the installed capacity and proclaim that competitors have the capacity to serve a large percentage of the embedded demand.[19]

Finally, recall the description of special access service in Section II.A. Special access is really just a collection of network elements. Economic analysis shows that

[17] The Quality Strategies studies appended to several ILEC forbearance requests suffers from this problem. *See Ex parte* letter from Lori Wright, MCI to Magalie Roman Salas, Secretary, FCC, CC Docket No. 96-262, March 24, 1999 for a discussion of problems with the Quality Strategies market estimates.

[18] This is the general scenario for a new CLEC due to the relatively small amount of traffic it is likely to be carrying.

[19] It would be useful in this context to compare the installed ILEC's capacity with installed CLEC capacity. This measure could, for example, be used to show that a predatory price cut by the ILEC might be more credible because the ILEC has installed the capacity to serve all CLEC demand.

when two goods that are perfect complements are sold together by a monopolist, the full monopoly rent can be extracted from either of the two. Even if there is some degree of substitutability away from one of the two goods, a great deal of the monopoly profit can be extracted. This means that a metric intended to measure the extent of competition should not address any one element of special access, whether picked at random or preselected because it gives the lowest concentration figure. Rather, the most appropriate measure of concentration must address the element of special access for which competition is least developed. For example, an investigation of entrance facilities may show that ILECs have lost significant market share in a particular wire center. If the entire service were deregulated as a result, special access customers could face large rate increases to serve customers located in wire centers at the other end of the circuit where competitors do not have facilities.

2. Entry Barriers

Entry barriers are high. Consider expansion by a CLEC that has already entered a CBD. The CLEC will have incurred the substantial time and expense of achieving certification, acquiring rights of way and building space, and constructing a fiber ring. The next step is to extend its network to serve additional customers. Customers cannot be added to the network simply by flipping a switch -- facilities must be constructed between the potential customer and the fiber ring. This requires gaining permission to enter the building, which is not always automatic. In many cases, building owners require compensation.

In addition, the CLEC must incur the fixed costs of procuring and installing the facilities. These are not inconsequential. If there is only demand for a small number of voice grade or T1 lines in that building, it may not be economic to invest in the facilities. This means that even in the narrowest geographic territory for which ILECs have requested forbearance authority, a significant number of customers do not have either current or realistic potential alternatives.

The problem only becomes worse when broader geographic areas are considered. Serving a potential customer outside the CBD but within the metropolitan area where a ring is already constructed requires acquisition of right-of-way and construction. Expansion to new cities within a LATA is even more problematic.

CLECs using unbundled loops can skip some of the steps described above. Nevertheless, the process of entering and competing will be an arduous one, even assuming that the ILECs cooperate in delivering the facilities. When entering each new city, the CLEC must lease facilities, acquire switching capability, and begin marketing. The UNE entry process does allow entrants the possibility of identifying and marketing to high revenue customers, but the getting-started costs will still be high. Moreover, the CLEC is at the mercy of the ILEC for service delivery and quality.

Dependency on one's largest competitor for the facilities and services required to convince potential customers that they should switch from the incumbent is, at best, a risky proposition. In any event, as of today, there is no evidence that ILECs are willing or able to deliver UNEs to competitors in the volume or with the quality that will be necessary to make an impact on special access charges.

B. Conduct

In competitive markets, firms are responsive to their customers. As noted earlier, both large and small IXCs, as well as the smaller CLECs, are special access customers and in many cases are ILEC competitors as well. In competitive markets firms commonly buy and sell capacity from one another. Failure of a competitive firm to sell at wholesale to a non-vertically integrated retailer means that the firm would likely lose the business to another competitor.

In the special access market the ILECs seldom cooperate with their competitors/customers. The ILECs have been dragging their feet in complying with the requirements of the 1996 Act to unbundle their networks and make collocation available.[20] The ALTS petition on collocation filed in 1998 demonstrates in great detail how the ILECs have refused to cooperate with the CLECs.[21] High non-recurring charges for collocation, high termination charges for customers who wish to convert to a CLEC from an ILEC and failure to cooperate on the timing of circuit cutovers are just a few examples of monopoly conduct by the ILECs. While the Commission's recent collocation order may alleviate some problems, others will remain.

The ILECs argue that their conduct in state markets where contract pricing authority has been granted demonstrates that they will not abuse this authority at the

[20] It can be conjectured that the ILECs simply see no reason to cooperate to open their markets to local competition. The RBOC ILECs would give up their monopoly to enter the highly competitive long distance market, while the non-RBOC ILECs would give up their monopoly and receive nothing in exchange. These companies evidently are not concerned that by failing to open their markets they will induce more rapid facilities-based entry.

[21] Petition of the Association for Local Telecommunications Services (ALTS) for a Declaratory Ruling Establishing Conditions Necessary to Promote Deployment of Advanced Telecommunications Capability Under Section 706 of the Telecommunications Act of 1996, CC Docket No. 98-78 (filed May 27, 1998) ("ALTS Petition").

federal level. However, the Commission cannot rely on this argument. First, interstate special access is a more or less perfect substitute for intrastate access because, as a practical matter, most intrastate users can order interstate circuits. Therefore, the federal tariffs place a cap on the rates that can be extracted from intrastate customers. This makes price gouging unlikely. Second, the state special access market is small. Blatant anticompetitive behavior would not be profitable if it endangers the opportunity for federal relief. Once federal relief is granted, the ILECs would be willing to take more risk. Finally, despite the above factors, there are allegations that the ILECs have engaged in anticompetitive behavior within their state markets.[22]

C. Performance

Unfortunately, accounting data do not allow an accurate assessment of profit by product line for the ILECs. It is possible, however, to assess ILEC special access profitability by comparing ILEC special access prices with economic costs as measured by cost models. The channel terminations of many T1 circuits are provisioned with high bit rate digital subscriber line ("HDSL"). The HAI/DSL Model can be used to estimate these costs.[23] The interoffice dedicated transport costs can be estimated with HAI Model 5.1. Using these tools, the cost of a T1 with approximately five miles of interoffice channel distance was estimated for Denver, Colorado. The TELRIC cost of two HDSL loops and five miles of transport is $224 while the tariffed rate is $311. In other words, the price is 40 percent greater than economic cost. The markup for transport is greater

[22] *See* Time Warner Telecom, Verified Request for Emergency Suspension of Ameritech's CSO Authority, Request to Open an Investigation Into Ameritech's CSO Practices and to Issue an Order Requiring Ameritech to Show Cause, Cause No. 40849, Indiana Utility Regulatory Commission.
[23] HAI Consulting, Inc., Boulder, CO ("HAI")

than the mark-up for the loop. The tariffed rate is based on a 60-month term commitment, which results in the lowest available price. Thus it is clear that the special access market is not competitive.

Performance under price caps also demonstrates that the ILECs continue to possess market power in special access markets. A preliminary review of the recently filed annual access tariffs shows that the ILECs are continuing to price their trunking basket services at the maximum permitted by price caps. Over the past several years, the Commission's rules have required X-factor reductions to be targeted to the Transport Interconnection Charge, so high capacity customers have not even received the advantage of the real price reductions required by the price cap rules. In a competitive market, these prices would have fallen.

IV. ANTICOMPETITIVE PRICING

The previous Section demonstrates that the special access market is not competitive. Even in the local geographic areas where competitors have concentrated most of their investment, substantial numbers of end users simply do not have competitive alternatives. The classic concern, of course, is that firms with market power will charge prices that exceed cost. As Figure 2 shows, even in the CBD of a major metropolitan area, there will be significant numbers of customers without alternatives. Many buildings within the CBD lack competitive alternatives. Outside the CBD competitive alternatives will not be widely available. As the boundary for deregulation increases, so does the number of customers without alternatives.

The ILECs argue that much of the demand for Special Access lies within CBDs where CLECs have facilities. This may be true, but is small consolation to the significant number of customers for whom there are no alternatives. Forbearance puts these customers at risk while general tariff requirements provide these customers with some of the benefits of competition.

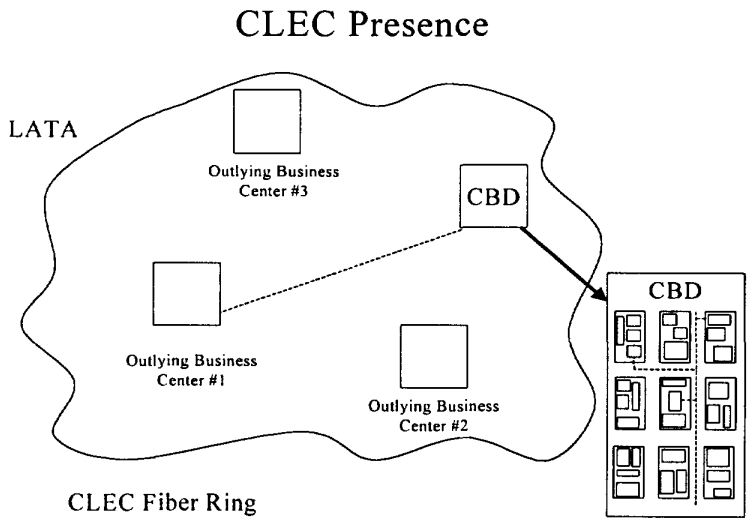

Figure 2
Competitive Facilities in a LATA

With the complete deregulation that the ILECs are requesting, customers for whom competitive services are not available could face substantial price increases. Allowing ILECs to engage in contract pricing only if they continue to offer generally available tariffs will not necessarily prevent this problem. ILECs would have many ways to evade the intended effects of the tariff safeguard. First, special access tariffs are quite complicated. For example, these tariffs include substantial volume and term discounts. As a result, most customers purchase special access at discounted levels. A significant

price increase can be accomplished through the simple expedient of reducing the discounts or making it more difficult for customers to qualify for them. The existing price cap rules would do little to prevent this realignment of rates. The price cap carriers have substantial flexibility to change rate element prices.

Second, technological change is constant. By refusing to tariff services that include the benefits of new technology, ILECs can effectively impose price increases on customers that purchase from the tariff. The bottom line is that by eliminating the requirement of general availability and non-discrimination inherent in requiring a dominant firm to sell all of its services by tariff, the Commission will be forced to regulate the ILECs more closely than it does today.

If forbearance will allow ILECs to exercise market power by raising prices for a substantial number of customers, why would competitors object? IXCs that are not vertically integrated are obviously opposed because they have no CLEC affiliate to benefit from any price increases. These carriers are customers rather than competitors. Vertically integrated IXCs will oppose deregulation if they believe that the end result will be higher overall access charges due to price increases to serve their end-user customers that have no alternatives.

IXCs in general have an additional reason to oppose deregulation. The RBOCs expect to receive Section 271 authority prior to local markets becoming fully competitive. If such authority is granted, then contract pricing will be a very powerful tool that can be used to unfairly advantage the RBOC long distance affiliate. Even if the rules are somehow written to make such offerings available to independent IXCs,

designing contracts that advantage large carriers can be used to exclude smaller IXCs from the market.

CLECs who are not vertically integrated will oppose deregulation if they believe that they will be discriminated against compared to the current situation.[24] These problems are discussed next.

The previous discussion has focused on the customers who would pay higher prices if forbearance is granted. There are other competitive concerns raised by classic monopoly price discrimination. Monopolists facing customers with varying demand elasticities due to the presence or absence of special access alternatives will price to extract higher contributions to profit from customers with the lowest demand elasticities. That means customers that have no CLEC alternative will pay higher prices, while customers that do face alternatives will receive lower prices. This classic monopoly pricing behavior has negative implications for the development of competition. By definition, CLECs only have customers that have high demand elasticities. Therefore, a small CLEC will find its margins shrinking. Attracting the capital to expand will become more difficult as a result. Even larger, more diversified CLECs will have difficulty justifying the commitment of scarce investment dollars to the facilities needed to expand their local networks.[25]

---

[24] They will also oppose deregulation if they believe regulation has served as a price umbrella. As Section VI shows, regulation has not provided such a price umbrella.

[25] This problem is less severe when the smaller CLECs have the ability to purchase collocation and unbundled network elements at reasonable prices and under reasonable terms and conditions. As noted above, the ILECs have not satisfied their obligations under the 1996 Act to provide CLECs with this ability.

The ILECs will likely respond to this argument in two ways. First, they are likely to point out that mark-ups above marginal cost are common in many industries that remain competitive. The problem with this argument is that in competitive industries, barriers to entry are low. If mark-ups in one market are too high, firms will enter and the low mark-ups in other markets will not be sustainable. At the end of the day the markets will have reached some sort of competitive equilibrium. Second, and related, the ILECs might argue that high mark-ups in some markets might attract entry. However, as discussed in Section II, there are significant barriers to expansion in this market, and new entrants will gage the attractiveness of entry by expected post-entry price – not the high price that would apply only so long as no alternative is available.

Even if larger competitors are able to maintain adequate margins in this environment, smaller competitors may not be able to do so. Of course, public policy should not necessarily focus on the viability of particular classes of competitors. However, this market is still in its developmental stages. The building blocks necessary for competition to become viable and grow are established in the 1996 Act. To date, these building blocks are not widely available in usable forms. The Commission is still trying to implement the Act.[26] Allowing pervasive and closely targeted discriminatory pricing prior to full implementation of the Act may unnecessarily disadvantage – perhaps permanently – a potentially important class of competitors and even more important – competition.

[26] *See* In the Matter of Deployment of Wireline Services Offering Advanced Telecommunications Capability, CC Docket No. 98-147, First Report and Order and Further Notice of Proposed Rulemaking, released March 31, 1999.

A related pricing strategy, which could not persist in a competitive access market, follows from the bargaining power of customers. Customers, in this case IXCs that have a viable threat to vertically integrate into the special access market, will receive substantial discounts while customers without such a threat will not. The result will be an IXC industry that is more concentrated than would otherwise be the case. Just such a bargaining power model may explain the current special access rate structure. The Commission allows pricing of special access rate elements down to the level of average variable cost.[27] As a result, large volume purchasers of special access receive very low prices, making it difficult for smaller carriers to compete in providing special access services.[28] The problem will only become worse when the ILEC can choose which customers receive the discounted services. The ILECs may also be able to use non-recurring charges to compete unfairly in a deregulated environment. For example, these charges may be waived for "win back" contract customers. This is a particular problem if the existing charges are well above cost – as IXCs have alleged.[29]

Publishing the contracts as tariffs and making the same terms and conditions available to similarly situated customers will not prevent these problems. As experience with AT&T's Tariff 12 offerings shows, dominant firms have the ability to "fence" single

[27] *E.g.*, Policy & Rules Concerning Rates for Dominant Carriers, 4 FCC Rcd 5384 (1989); Policy & Rules Concerning Rates for Dominant Carriers, 6 FCC Rcd 665 (1991).

[28] The source of the bargaining power likely comes from having large volumes on a specific route, not from being a large IXC per se. However, the two are surely correlated.

[29] IXCs have argued that the ILECs are using NRCs to strategically deny customers the benefits of competition even today. *See,* In the Matter of Access Charge Reform, CC Docket 96-262, and Price Cap Performance of Local Exchange Carriers, CC Docket 94-1, Affidavit of Wayne Rehberger, attached to comments of MCI WorldCom, October 26, 1998.

customer offerings in ways that make it difficult for other customers to take advantage of the reduced rates.[30]

Strategic anticompetitive, or even predatory pricing cannot be ruled out in this market. Predatory pricing can be defined as pricing below marginal cost in order to deter entry or otherwise influence the ultimate structure of the market. Pricing below marginal cost will only be profitable if the losses can be recouped at a later time or, in the case of regulated firms, recovered from customers of other services through cost-shifting. Modern economic analysis shows that predatory pricing can be profitable in certain circumstances, for example when a multi-market firm faces entry in some but not all of its markets. Tirole provides the following example:

> . . . suppose that an entrant enters (at some cost) into market 1. The incumbent, who is still a monopolist in market 2, may have an incentive to prey on the market 1 entrant to signal that his costs are low. Even if such a strategy does not induce exit (and thereby loses money) in market 1, it may prevent entry by another entrant (possible the same firm) in market 2.[31]

The best proof that something is possible is that it exists. Therefore, Tirole goes on to provide historical examples of such predatory behavior in industries with high entry barriers.

Weiman and Levin provide an historical example from the telecommunications industry. They studied the response of Southern Bell Telephone Company ("SBT") to local competition at the turn of the century, concluding that:

---

[30] *Op. Cit., Tariff 12 Order.* AT&T's Tariff 12 offerings did not have a large anticompetitive effect on the market because by the time they were granted this flexibility the market was well along the way to becoming competitive. See the discussion of long distance competition in Section VII.

[31] Jean Tirole, *The Theory of Industrial Organization* (1989), p. 376.

> on balance, the evidence seems overwhelming that SBT responded to competition by cutting its prices when entry was threatened, cutting them even further when entry occurred (or even somewhat in advance) and holding them below average operating cost for a sustained period.[32]

They go on to conclude that this behavior can only be categorized as "predatory" in nature.

The Department of Justice complaint against American Airlines shows that the antitrust authorities understand and disapprove of such behavior.[33] The Department alleges that the airline industry entry barriers are " . . . exacerbated by the ability of a hub carrier to reduce its fares or increase its seating capacity and frequency of service virtually overnight, responding to expected entry before such entry can be successfully implemented."[34] The DOJ alleged that American's revenues were actually below variable cost on some routes at some times.[35] The ILECs' forbearance request would give them the ability to engage in similar tactics in the special access market.

The Commission has also recognized the danger of such strategic anticompetitive pricing:

> If the incumbent is able to develop a reputation of aggressively competing via targeted bids with recent entrants by doing so in a handful of markets, it may be able to dissuade potential entrants from entering any of its other markets. Thus, the incumbent may protect its monopoly position in all of its markets by aggressively competing in markets where entry initially occurs.[36]

---

[32] Levin and Weiman, "Preying for Monopoly? The Case of Southern Bell Telephone Company, 1894-1912," *Journal of Political Economy*, Volume 102, No. 1, February 1994, p. 113. (emphasis supplied)
[33] *See* United States of America v. AMR Corporation, Civil Action No.: 99-1180-JTM, Complaint, filed May 13, 1999.
[34] *Id.*, para. 17.
[35] *Id.*, para. 50.
[36] In the Matter of CC Docket No. 97-158, Southwestern Bell Telephone Company Transmittal No. 2633 Tariff F.C.C. No. Order Concluding Investigation And Denying Application For Review, Released November 14, 1997

Tirole also discusses the classic predation theory in which a monopolist is able to outlast the entrant due to its superior financial strength. He points out that predatory behavior of this type " . . . relies on the presumption that outside financing is more costly than inside financing (retained earnings)."[37] This "deep pockets" theory of predation is controversial and not widely accepted – in part because competitive capital markets should be willing to provide efficient entrants with financing. Nevertheless, there is no doubt that CLECs, in particular the smaller new entrants, have higher costs of capital than ILECs. If the ILECs were to use their contract pricing authority to aggressively take business away from CLECs, venture capital firms and IPO investors would likely respond by reducing the flow of funds to CLECs. Larger firms such as AT&T and MCI WorldCom might not be affected in this way, but the long-term structure of the market could be adversely affected. Innovation is likely correlated with both the number and diversity of players.[38]

This type of strategic pricing will admittedly not necessarily be the first choice of a dominant firm trying to protect its market position. "Raising rivals' costs" strategies can successfully deter competition without the need to engage in even targeted price reductions.[39] Refusals to deal, tying and raising prices paid by competitors for essential ILEC inputs are raising rivals' cost strategies. They effectively allow the incumbent to reduce competitor margins or increase barriers to entry without sacrificing revenue.

---

[37] Tirole, *The Theory of Industrial Organization,* p. 379.

[38] Huber reports that CLECs have provisioned more DSL circuits than have the ILECs. Smaller new entrant CLECs such as Covad and Rhythms Net are leaders in DSL deployment. *See,* "UNE Fact Report," by Peter Huber and Evan Leo, May 26, 1999, prepared for Ameritech, Bell Atlantic, *et al.*, filed by the United States Telephone Association in CC Docket 96-98, p. II-18.

Some raising rivals' costs strategies would in fact be facilitated by forbearance. As noted earlier, CLECs are both competitors and customers of the ILECs. Raising prices paid by CLECs that use special access as an input will obviously harm competitors without requiring the sacrifice of any ILEC revenues.[40] In effect, CLECs will be squeezed from both ends – paying more for services they buy from ILECs and receiving less from customers whom are offered discriminatory prices.

Bundling special access circuits offered in wire centers where competitors have alternatives with circuits in offices where they do not can also be an effective raising rivals' cost strategy.[41] Assume that the ILEC forbearance requests are granted as requested. That would allow contract pricing for all special access services. Freed from the obligation to make services generally available, the ILECs could simply bundle circuits where there are no competitive alternatives with circuits where competitive alternatives are available. The ILECs might respond that such blatant tying would result in an antitrust suit. First, the ILECs would certainly take the probability of such a suit into consideration. The calculus of that decision would involve an estimate of damages multiplied by the probability of losing, discounted by the delay involved, measured against the potential benefits from creating a permanently more concentrated market. Second, more subtle bundling strategies are available.

---

[39] *See* Steven Salop and David Scheffman, "Raising Rivals' Costs," *American Economic Review*, pp. 267-271 (1983)

[40] There is no opportunity cost associated with this behavior since the ILECs will supply all the circuits that CLECs are unable to supply as a result of the anticompetitive pricing.

[41] Tirole, *The Theory of Industrial Organization*, concludes that " . . . technological precommitment to bundling has important strategic effects and may allow a firm to use the leverage provided by its power in one market to foreclose another market." (p. 335)

The potential for anticompetitive behavior does not mean that ILECs should be prevented from responding to competitive entry. Clearly they should be allowed to make competitive responses to entry and denying them that ability would harm consumers and protect inefficient entrants. The message is that competitive safeguards are necessary to reduce the probability of anticompetitive price responses. Moreover, as the next section shows, the Commission has, through a series of deregulatory actions over the past fifteen years, allowed ILECs to respond to entry. This flexibility is sufficient until robust and sustainable competition is prevalent in the special access market.

V. REGULATORY FLEXIBILITY

ILECs have been complaining about special access competition for many years. The Commission has responded by granting the ILECs significant pricing flexibility. Given the flexibility they have achieved, it is not credible to argue that it is regulation that is holding prices above competitive levels.

Prior to divestiture, the Commission's rules required 90 day notice for rate changes along with substantial cost support. Since then tariff filing notice requirements have dwindled to 14 days or even less in the case of rate reductions, while the price cap rules provide ILECs with a great deal of tariffing flexibility. For example, Bell Atlantic recently implemented price increases for DDS, Hi-Cap Special Access, SONET, FMS, Frame Relay, SMDS, and Switched Access Direct Trunk Transport (DS1 and DS3) services on two weeks notice. Since Bell Atlantic was presumably already pricing these services at the cap, these increases were made possible by a 16 percent reduction in the

Transport Interconnection Charge ("TIC").[42] As noted above, ILECs have been allowed by the Commission to price rate elements as low as average variable cost, which in the high fixed cost telecommunications business is virtually equivalent to no price floor at all.[43]

In response to transport competition, the Commission allowed substantial rate restructuring, resulting in competitors being required to pay a portion of ILEC fixed costs in the form of the TIC. Furthermore, ILECs are allowed to geographically deaverage special access rates – a right that they have failed to exploit to any large extent. In sum, ILEC special access services have been deregulated to the extent that the only meaningful requirement left is generally available pricing in the form of tariffs. There can be no credible argument that regulation is providing a price umbrella for the CLECs.

In short, it seems that ILECs have all the flexibility they could want to reduce prices. What they want is flexibility to raise prices to customers who have no alternatives and reduce prices in a discriminatory, targeted way to those customers who do have alternatives.

VI. COSTS AND BENEFITS OF RELAXED REGULATION

Most observers agree that a time will come when it will be appropriate to complete the process of deregulation of special access services by eliminating the remaining requirement that ILECs offer these services under tariff. Growth of the market and improvements in technology make this result all but inevitable. Controversy

[42] *See* Letter from Thomas Dreyer, Bell Atlantic Network Services, dated June 10, 1999.
[43] This is not an endorsement of the Commission's average variable cost test. The ILECs have incentives to compete unfairly and the average variable cost test may produce prices that would not be compensatory in the long run. Prices based on TELRIC provide a better basis for a price floor.

surrounds the question of when that time will arrive. Premature deregulation would be significantly more detrimental to consumers in the long run than would any short-term negative consequences if regulation is maintained longer than absolutely necessary.

Premature deregulation may lead to reduced investment in the local telecommunications infrastructure, particularly by the smaller CLECs. On the other hand, the potential costs of delaying deregulation past the point where it is providing consumer and competitive benefits are not large. First, as discussed in Section V, the ILECS have already been largely deregulated. Second, there is no reason to believe that the Commission would prevent or delay generally available price reductions if they are needed by the ILECs to compete with CLECs. Third, despite the fact of ongoing special access competition, the ILECs continue to grow in terms of both revenues and profits.

The potential risks associated with removing regulatory safeguards at this point are much greater than the potential rewards. Moreover, given the high entry barriers associated with facilities expansion, the problems with deploying UNEs and achieving cost-efficient collocation must be solved prior to any further deregulation. Rewarding the ILECs while they are dragging their feet on opening markets as required by the 1996 Act sends the wrong signals.

Finally, tariff regulation prevents price discrimination. In the absence of price discrimination, the incumbent must reduce all of its prices towards competitive levels if it wishes to respond to entry, even if a significant number of customers do not yet have competitive alternatives. The result is that a relatively small competitor market share can

induce competitive prices throughout the market.[44] This pro-competitive effect of entry is much less likely when price discrimination is allowed.

VII. LONG DISTANCE DEREGULATION

The phased deregulation of the long distance market was successful. That experience can be used to inform Commission decisions regarding deregulation of local markets. There are several factors that differentiate the introduction of competition in the long distance market from the introduction of competition into the local market.

First, the IXCs had a major advantage that local competitors do not have. The divestiture separated the potentially competitive long distance business from the monopoly local exchange. This eliminated many of the problems associated with leaving monopoly and competitive businesses in the same integrated firm. CLECs must compete with ILECs at the same time that they depend on the ILECs to provide access to essential elements of the ILEC networks.

Second, equal access removed a substantial barrier to entry and expansion in the long distance business. The analytical equivalent of equal access in the special access/local competition context is seamless and cost-based collocation as well as access to UNEs. The ILECs have yet to comply with their "equal access" obligations.

Third, during the early competitive era in the long distance market, new entrants were receiving substantial Commission ordered discounts on access charges. That is, they paid less for access than did AT&T. Even after equal access was ordered, substantial discounts were available to the new entrants because it was recognized that it

[44] *See,* Hausman *et al*, "Market Definition under Price Discrimination".

would take a long time to implement equal access. No such discounts are available, or anticipated, for new entrants into local markets.

Fourth, the MFJ provided for LATA-wide access. With LATA-wide origination, a new entrant to the interexchange market could establish a single point of presence ("POP") and market switched long distance service to any potential customer in the LATA. This allowed the competitive IXCs to market efficiently and expand rapidly.[45]

Fifth, presubscription was another aid to the development of long distance competition. Presubscription essentially provided a "fresh look" for all consumers. Sixth, the ability of even relatively small customers to use multiple vendors promoted expansion by the IXC entrants. Finally, AT&T was not allowed to engage in customer specific pricing until 1989, and even then was required to file tariffs.[46]

One of the lessons from AT&T deregulation is that it takes time to bring competition to a monopoly market. The first steps to open the long distance market to competition were taken in 1959 with the "*Above 890*" decision.[47] Due in significant part to a drastic price response by AT&T in the narrow private network market that the *Above 890* decision affected, little actual competition developed.[48] MCI, AT&T's first major long distance competitor, received authority to provide microwave-based private line services in 1969. Competitors were allowed to provide switched services as a result of

---

[45] If there is an analog for local competition it would be total service resale. This entry tool has been largely ineffective because the discounts established by state Commissions have been inadequate to allow efficient resale.

[46] Op. cit., *Tariff 12 Order.*

[47] In the Matter of Allocation of Frequencies in the Bands Above 890 Mhz., Docket No. 11866, Report and Order, 27 FCC 359 (1959) ("*Above 890*").

[48] AT&T targeted private network users with substantial price reductions. *See*, AT&T Long Lines Department, Revisions to Tariff FCC No. 260, Private Line Services, Series 5000, Docket No. 18128, 61 FCC2d 587 (1976) ("TELPAK").

the *Execunet Decisions* in 1977 and 1978.[49] At the time of the *Execunet Decisions*, AT&T controlled over 95 percent of the long distance market. By the time of divestiture, six years later, AT&T still retained a 90 percent market share, well above the level considered by the Commission to confer dominance status on AT&T.[50] The 1987 *AT&T Price Cap Order* established strict limits on AT&T pricing of its core services.[51] AT&T was declared non-dominant in 1995 only after barriers to entry into the interLATA long distance business had been substantially removed and it had surrendered almost 40 percent of market share.[52]

If anything, competition in the local market is developing less rapidly than it did in long distance. The RBOCs have been claiming that local markets are competitive since 1984 (when they began operating), despite the fact that the CAPs didn't even begin building fiber rings in major metropolitan areas until the mid-1980s. Today, over ten years after they entered the access service business, the CAPs still measure their progress in terms of each additional building served – rather than barely perceptible changes in market share.

---

[49] MCI v. FCC, 561 F2d 365 (D.C. Cir. 1977), and 580 F2d 590 (D.C. Cir. 1978) ("*Execunet Decisions*").
[50] The early history of long distance competition can be found in Daniel Kelley, "Deregulation After Divestiture: the Effect of the AT&T Settlement on Competition," OPP Working Paper No. 8, (April 1982)
[51] In the matter of Policy and Rules Concerning Rates for Dominant Carriers, CC Docket 87-313, Report and Order and Second Further Notice of Proposed Rulemaking, 4 FCC Rcd 2873 (1987) ("*AT&T Price Cap Order*")
[52] In the Matter of Motion of AT&T Corp. to be Reclassified as a Non-dominant Carrier, FCC Document No. 95-427, Order, 11 FCC Rcd 3271 (1995).

VIII. DEREGULATION METRICS

The previous sections demonstrate that granting forbearance or contract pricing authority would be premature. Nevertheless, it is appropriate to consider guidelines for implementing further deregulation as competition develops.

As the market definition and competition discussions in Sections II and III demonstrate, market share and gross capacity measures are difficult to use as triggers for deregulation. When AT&T was deregulated with 60 percent of the market in 1995, the remaining 40 percent of the customers had viable competitive alternatives available. Assuming that the special access market can be deregulated in a LATA when the ILEC's share falls to 60 percent is inappropriate because some significant portion of their customers may not have any competitive alternative available.

Gross capacity is a useless trigger because capacity is highly location-specific. Consistent with the competitive analysis presented here, deregulation should be tied to the ability of competitors to reach efficiently and economically a substantial majority of customer locations with owned or leased facilities. This would, in effect, tie ILEC deregulation to meeting the "equal access" obligations inherent in the 1996 Act. Examples of such triggers might be as follows:

- Collocation should be available in 90 percent of the ILEC wire centers within a LATA.
- There should be competitive transport available to each of these offices.
- The ILECs must be in full compliance with Sections 251 and 252 of the 1996 Act.

Compliance with the Act means that loops – including T1 and DS-3 channel terminations – must be unbundled, provisioned in reasonable time frames, priced at true TELRIC, and geographically deaveraged. Moreover, non-recurring charges should not be excessive. One possible test for these conditions being satisfied is that 20 percent of the ILEC business loops in the LATA are actually being resold or provisioned as UNEs.

The reason for the relatively high loop UNE trigger is that the best proof that loop unbundling is working is in the pudding. The ILECs claim that the requirements of the Act are being met now, but no CLECs agree. AT&T has demonstrated that although most states embraced TELRIC in principle, in practice the loop rates that have been approved contain substantial elements of embedded costs.[53]

All three tests must be met before special access services are deregulated. There must also be safeguards against discriminatorily low prices. The ILEC must be able to demonstrate that its contract network is priced above the TELRIC of the individual components that comprise the physical facilities in the network. Prices below TELRIC provide an obvious opportunity to place CLECs in a price squeeze.

There must also be adequate remedies in cases where rules such as this are violated.[54] Only when full facilities based competition for all special access rate elements is accomplished would it be appropriate to consider removing these safeguards.

Allowing single customer contract pricing while requiring the ILECs to maintain tariffs is not an adequate safeguard. As discussed above in Section V, current price cap

[53] *See, ex parte* letter from Joel Lubin, Vice President, AT&T to Magalie Roman Salas, Secretary, FCC, CC Docket No. 96-98, March 19, 1999. Although not mentioned in the *ex parte* letter, one likely reason that state regulators have been reluctant to set prices closer to true TELRIC is that the Commission has not yet implemented comprehensive universal service reform.

rules provide ILECs with substantial ability to alter the terms and conditions to evade the intent of the tariffing requirement. In addition, the benefits of new services and technologies may be denied to tariff customers.

This is not to say that there are no deregulatory steps that could be taken today. For example, the Commission may consider reducing tariff notice and cost support requirements for special access services on the condition that the service is generally available and no rate element is priced below the corresponding TELRIC price.

IX. CONCLUSION

Forbearance is a regulatory tool whose time has not come in the case of special access. Markets are not yet sufficiently competitive to remove the protection of the tariff safeguard. Triggers related to demonstration that the ILECs have met their 1996 Act access obligations should be established to guide further deregulation.

[54] Without enforcement and remedies, competitive safeguards are useless.

A. Daniel Kelley
Senior Vice President
HAI Consulting, Inc.

Dr. Kelley specializes in economic and public policy analysis of the telecommunications industry. At HAI (formerly Hatfield Associates, Inc.) he has been involved in antitrust and regulatory investigations that address cost allocation, cross-subsidy, and dominant firm pricing. He has authored or co-authored papers submitted in the Federal Communications Commission's Video Dialtone, Advanced Intelligent Network, Cable Rate Regulation, PCS Licensing, Local Interconnection, Access Charge Reform, and Broadband Communications proceedings. In addition, he has advised clients on the Computer III, Open Network Architecture, Access Transport Competition, Price Cap, and Local Interconnection proceedings. Dr. Kelley has provided expert testimony on competition, cross-subsidy, interconnection and universal service issues before the Federal Communications Commission and the California, Colorado, Connecticut, Florida, Georgia, Hawaii, Maryland, Massachusetts, Michigan, Oregon, New Jersey, and New York Public Utility Commissions.

His international experience includes advising the governments of Chile and Hungary on competition and privatization and advising private corporations on competition and interconnection issues in Australia, Mexico and New Zealand. Dr. Kelley has participated in State Department sponsored seminars and University level instructional courses in the Czech Republic, Hungary, Poland, the Slovak Republic and Slovenia.

Prior to joining HAI in 1990, Dr. Kelley was Director of Regulatory Policy at MCI Communications Corporation. At MCI he was responsible for developing and implementing public policy positions on the entire spectrum of regulatory and legislative issues facing the company. He also managed an interdisciplinary group of economists, engineers and lawyers engaged in analyzing AT&T and local telephone company tariffs.

From January 1978 to September 1982, Dr. Kelley was with the Federal Communications Commission. At the FCC he served as Special Assistant to Chairman Charles D. Ferris. As Special Assistant, he advised the Chairman on proposed regulatory changes in the broadcasting, cable television and telephone industries, analyzed legislation and drafted Congressional testimony, and coordinated Bureau and Office efforts on major common carrier matters such as the Second Computer Inquiry and the Competitive Carrier Rulemaking. He also held Senior Economist positions in the Office of Plans and Policy and the Common Carrier Bureau.

Dr. Kelley was a staff economist with the Antitrust Division, U.S. Department of Justice, from September 1972 to January 1978. At the Justice Department he analyzed competitive effects of mergers and business practices in the cable television, broadcasting, motion picture, newspaper and telephone industries. As a member of the economic staff of U.S. v. AT&T, he was responsible for analyzing proposals for restructuring of the Bell System.

Dr. Kelley received a Ph.D. in Economics from the University of Oregon in 1976, with fields of specialization in Industrial Organization, Public Finance and Monetary Theory. He also holds an M.A. in Economics from the University of Oregon and a B.A. in Economics from the University of Colorado. He has published numerous articles on telecommunications economics and public policy and regularly participates as a speaker at academic and industry conferences.