# 8. HEALTH CARE AND LIFE SCIENCES

The promise of Information Technology to dramatically improve health care practice and management is evolving with remarkable speed[61]. The potential is exceptional.

The Chicago region has a major concentration of health care associations, including the Illinois Medical District, the largest urban medical district in the world. The region boasts nationally recognized biomedical research facilities and teaching hospitals, and several of the strongest biotechnology and pharmaceutical companies anywhere. The Illinois Coalition, in its "1997 Illinois High Tech Yearbook[36]," notes that the Life Sciences, including health care and biomedical research, has more employment in Metropolitan Chicago than anywhere else in the country. This offers a particular opportunity to capitalize on the digital network infrastructure to both human and economic development advantage.

**"Telemedicine across the digital network infrastructure offers a way to substantially increase access to quality health care."**

Further, an examination of health care as a unique industry and the implications of the digital network infrastructure has particular relevance, since health costs claim almost 15% of our Gross National Product and is a major focus of international, federal, state, regional, and local policy makers. The agenda of most policy bodies has items related to health care or biomedicine to debate or advance. Every citizen is affected by the industry's practices and research.

**The Promise of Telemedicine**

Today, as medical advances out pace practice in many communities and neighborhoods, telemedicine across the digital network infrastructure offers a way to substantially increase access to quality health care[61].

- Health care organizations are networking to support both practice and administration, as regional affiliations bring together dispersed hospitals, clinics, specialists, extended care facilities, and home health care into single organizations.
- Institutions are experimenting with providing high-speed connections to the homes of medical experts to facilitate remote consultation and diagnostics.
- Interactive, computer-assisted medical training is being explored in projects like the Virtual Medical Training System (VMTS) at Argonne National Laboratory, the University of Illinois, and VideoRec.
- Firms such as Musculographics, Inc. (http://musculographics.com/), a growing Chicago company, have created systems for surgeons to practice procedures and share critical practices using the Internet.

These developments are heavily dependent on reliable, high-speed digital networks. To Metropolitan Chicago's advantage, the networks are emerging and the minds to use these networks are in the region.

**"Science and commerce are moving ahead of practice, much of it for lack of an adequate information system."**

**A Lack of Information**

At the same time, patients today navigate managed care systems that are increasingly complex and concentrated. Each of us, for our families and ourselves adapt to new providers and requirements, new procedures and diagnostic capabilities, and ever increasing costs.

In this information intensive enterprise, science and commerce are moving ahead of practice, much of it for lack of an adequate information system[38]. Most practitioners today, without long-term patient contact, do not have comprehensive patient histories, lack vital information for effective diagnosis, and are unable to effectively track treatments.

Paul Tang, Medical Director of Information Systems and Associate Professor of Medicine at the Northwestern University Medical School, reports one study found that 81% of physicians lack all the information needed for the treatment of a patient on any given day, on average lacking four pieces of information, such as lab results, previous physician

observations, current prescriptions and treatments. This is because there are no consistent patient records that go with the patient, and no standards for creating such records.

Thus, when Victoria was recently referred to a specialist for a test, the only information the specialist had for the referral was the history created by the patient from memory and hand-carried to the appointment. It is no surprise then the study found physicians spend 30% of their time gathering information on the patient, relevant research information, or best practices.

Yet, interactive systems have been tested, reporting requirements for managed care systems have established the foundation for an effective database, and standards are now being tested for establishing electronic patient records. The foundation exists. As Paul Tang, who is engaged in a project developing computerize patient records, noted, "It is a joy to practice with information; it is a qualitatively new experience."

**Improved Health Care Delivery**

Researchers are now involved in basic research to fully engage in telemedicine and to establish electronic patient record systems and diagnostic databases. The Chicago region stands to benefit, both in an improved quality-of-life and economic growth, if these two advances are developed here. Potential benefits include:

- Providing a wider range of services through remote diagnostics and access to specialists, even in remote and economically deprived communities and neighborhoods;
- Advancing cost-effective health care delivery through better utilization of health care professionals by both electronic consultation and ready access to research information, diagnostic databases, and patient records;
- Expanding home health care services through electronic access to patient data and care information "at their finger tips;"
- Allowing ready access for consumers to research and information vital to patients understanding their diagnosis and treatment;
- Offering richer continuing education and training for more health care professionals in the latest research and procedures by enabling it through technology in the workplace;
- Reducing paperwork for referrals and insurance claims.

This is not to say there is an easy path. Many thorny issues must be resolved, including:

- Establishing common patient identifiers from among the very different systems now used by physicians, specialists, nurses, laboratories, hospitals, clinics, pharmacists, and others;
- Adopting a common vocabulary to describe histories, observations, treatments, tests, medications, and other interventions;
- Determining appropriate privacy and confidentiality standards; and,
- Creating network security systems without undue restrictions for researchers.

**"This is not to say there is an easy path. Many thorny issues must be resolved."**

Lastly, and central to the entire undertaking, the digital network infrastructure must be expanded to accommodate the applications. Again, it comes back to issues of access and appropriate bandwidth.

Combined with the entrepreneurial opportunities in the Metropolitan region from the transfer of medical research that is discussed under the section on technology-based economic development, advancing telemedicine and developing a secure electronic patient record system evolves from the region's strength. It is a niche that can be effectively developed through regional support.

**"Ambitious goals are being set for Illinois to create, attract, and retain biotechnology companies."**

**Research and Economic Development**

A new strategic plan is being formulated to improve the environment for biomedical technology in Illinois and to reassert Chicago's global role as a center for the life sciences. Arader[1] concluded that Illinois is in danger of losing its position in health care and the life sciences because a commensurate share of funding for life science research is not being attracted, and commercial productivity of university research in Illinois is comparably low. Ambitious goals are being set for Illinois to create, attract, and retain biotechnology companies, including the human health industries (pharmaceuticals, diagnostics and gene therapy), agriculture (seed enhancements, fertilizers, insect control, and transgenic plants), food processing, and related fields.

***PUTTING OUR MINDS TOGETHER* we can use the digital network infrastructure to improve the quality of health care for the region, and leverage the assets of Metropolitan Chicago to expand economic development through advancements in telemedicine and medical informatics.**

None of the potential opportunities to improve health care in the region can be realized without the digital network infrastructure being readily available to connect hospitals, both large and small, city and suburban, local clinics and doctors offices, and our homes. Advancing telemedicine, sharing medical information and patient records between hospitals, clinics, doctors offices, and homes across the region, and encouraging entrepreneurial opportunities for the application of medical research, which will benefit every one in the region, depends on it.

The concentration of health care resources and expertise in Metropolitan Chicago suggests that the region can provide leadership for the country. A regional task force or project team on Health Care, Biotechnology, and Information Technology could leverage this opportunity.

## 9. GOVERNMENT AND COMMUNITY NETWORKS

Metropolitan Chicago is a region of communities and neighborhoods. There are voices to be heard, information to be shared, and new visions to be advocated. Connecting citizens, policy makers, corporate leaders, community organizations, researchers, and planners around common issues is one of the greatest opportunities of the digital network infrastructure[56].

- In Blacksburg, Virginia, citizens can tap into the Blacksburg Electronic Village (http://www.bev.net/) to receive information from and communicate with community and educational institutions, museums and government. Discussion groups, seniors information, health, and commerce are all on the community network. Virginia Tech, which also created and supports the statewide network, does the same for its home city.

- In Charlotte, North Carolina, Charlotte's Web (http://www.charweb.org/) has information on employment opportunities, arts and entertainment, health and human services, community organizations, education and libraries, sports and recreation, and business and commerce.

- PrairieNet (http://www.prairienet.org/) is a member-supported community network for East-Central Illinois that is supported by the Graduate School of Library and Information Science at the University of Illinois at Urbana-Champaign. PrairieNet was created to strengthen community organizations, empower individuals, facilitate information and resource sharing, and promote equity in access to computer resources for everyone in the community.

- In Chicago, the Center for Neighborhood Technology (http://www.cnt.org/) and Roosevelt University's Institute for Metropolitan Affairs are supporting the Chicago Community Information Consortium, linking health, education, transportation, environmental, social services, and economic development information. The particular goal of the initiative is to "inhibit potential red-lining of information technologies in low-income communities."

- The Neighborhood and Nonprofits Network (http://www.uic.edu/~schorsch/) is a partnership between the University of Illinois at Chicago, the Information Technology Resource Center, the Donors Forum of Chicago, and 50 community-based organizations in two low-income neighborhoods near the University. The purpose of the network is to improve the quality-of-life in these neighborhoods by strengthening the communication and information sharing between local community organizations, the University, citizens, foundations, corporate donors, and nonprofit organizations.

**"Connecting citizens, policy makers, corporate leaders, community organizations, researchers, and planners around common issues is one of the greatest opportunities of the digital network infrastructure."**

Leaders in these communities are already seeing changes in the richness of the dialogue, the number of people participating in community life, and the increased efficiency of community services.

**The Virtual Real Community**

The purpose of these networks is to bring people together to create a greater sense of community[49]. The networks are targeted to address specific community issues, share local information, and seek input about the concerns that participants share. Local governments and community organizations are creating community networks throughout the country to:

- Provide better service by making available general information, applications for services, meeting notices and agendas, city codes and regulations, council actions, employee contacts, and the means to register input and inquiries;

- Encourage greater participation in government, greater communication with officials, and greater involvement in democratic processes;

- Improve education by connecting everyone from their homes, schools, or businesses to education and learning resources, libraries, and information sites around the globe;

- Enhance community services by connecting community groups, nonprofit organizations, schools, and churches to each other and with policy makers;

- Connect city agencies to share information, improve internal management, and save costs;

- Promote the community by connecting prospective visitors and citizens with the assets, attractions, and events in the community and a way to make reservations, if needed;
- Stimulate economic development by connecting businesses to customers, suppliers, and partners anywhere; and,
- Support education and training in the use of network technologies and applications that will enable citizens to take full advantage of the resources being made available.

The State of Illinois now has a Web site (http://www.state.il.us/), although not yet reaching the level of interaction of many community networks. The State's Web site provides extensive information on State agencies, major policy initiatives, and links to communities and educational institutions across the State. As it is expanded, it is likely that this Web site, too, will become an active forum for greater participation by the citizens of Illinois.

Community, state, and religious organizations, Chambers of Commerce, foundations, restaurants, small businesses, galleries, and many others are putting up Web sites to reach their members and constituents. An excellent resource for information for community and organizational networks about the realizing social benefits by the public interest use of communications is the Benton Foundation (http://www.benton.org/).

**"Just as community networks can strengthen communities, so, too, could a regional planning network strengthen the region."**

**How Are We Doing?**
The Progress and Freedom Foundation, in conjunction with IBM's Institute for Electronic Government examined the extent to which digital information technologies are used by state and local governments[57]. In 1997 it ranked each state, including Illinois, in seven areas:

| | ILLINOIS | MI | IN | WI | CA | TX | NY | MA |
|---|---|---|---|---|---|---|---|---|
| Digital Democracy | **48** | 26 | 3 | 2 | 12 | 30 | 22 | 35 |
| Higher Education | **6** | 2 | 1 | 9 | 30 | 41 | 28 | 9 |
| K-12 Education | **46** | 3 | 3 | 14 | 8 | 39 | 19 | 29 |
| Business Regulation | **33** | 7 | 7 | 7 | 21 | 26 | 13 | 1 |
| Revenues and Taxation | **13** | 46 | 18 | 2 | 29 | 29 | 24 | 4 |
| Social Services | **7** | 19 | 29 | 3 | 49 | 24 | 19 | 38 |
| Law Enforcement/courts | **47** | 3 | 25 | 6 | 6 | 17 | 47 | 35 |
| Other initiatives | **29** | 29 | 38 | 22 | 17 | 29 | 9 | 4 |
| **OVERALL** | **36** | 10 | 7 | 2 | 16 | 35 | 26 | 13 |

Digital Democracy refers to the uses of the Internet related to citizen input and exchange, such as easily accessible electronic mail addresses for elected officials and policy makers, the status of proposed laws, and the opportunity to receive information and have input into programs and initiatives. Illinois' ranking on Digital Democracy is the result of state government and communities, regional bodies and neighborhoods investing the time and money to effectively develop Web sites and electronic mail access.

This report reaffirms that Illinois is doing well in the use of digital technology in higher education, but, as noted in an earlier analysis, is a late entrant to using technology in K-12 education. The Progress and Freedom Foundation report warns that "There is a wide gap between the "best" states and those at the back of the pack. States that fall behind in the implementation of these technologies may find themselves caught in a vicious spiral: unable to attract high-tech business, saddled with increasingly obsolete systems and offering substandard levels of government service to an increasingly demanding populace."

**A Metropolitan Chicago Regional Planning Network**
As the impact of the digital network infrastructure on Metropolitan Chicago is assessed, its utilization as a vehicle for regional decision making should also be considered. Just as community networks can strengthen communities, so, too, could a regional planning network strengthen the region.

Bringing together all of the regional bodies, sector initiatives, and economic development activities into a single informational and exchange resource could reinforce key goals for the region, as well as support regional planning. The beginnings of such a resource can be found in the Planning Commissioners Journal Web site (http://www.plannersweb.com/). But, a Metropolitan Chicago Regional Planning Network could be much more if it is to both share information and bring policy leaders together.

The creation of a Metropolitan Chicago Regional Planning Network would be an ambitious undertaking, but the payback may be worth the investment.

- It would be a place where pivotal planning issues are identified, organized, and examined.
- It would facilitate the timely distribution of policy initiatives, now hindered by the time and expense of copying, packaging, and mailing.
- Activities and initiatives would develop a shared database of information from the many jurisdictions crisscrossing Metropolitan Chicago that regional planners could draw upon.
- It would provide links to all relevant regional, state, and national resources, reports, and data, including the Northeastern Illinois Planning Commission (http://www.nipc.cog.il.us/), the Civic Federation (http://www.mcs.net/~civicfed/), the West Central Municipal Conference and its Chicago Area Transportation Study, LincolnNet-South Metro Region (http://www.lincolnnet.net/) and other resources.

The Metropolitan Chicago Regional Planning Network would provide a model that would encourage local communities and regional bodies to use the Internet to advance planning and cooperation.

***PUTTING OUR MINDS TOGETHER* we can use the digital network infrastructure to improve and strengthen the region, facilitate regional planning, and give citizens and policy makers greater opportunity to participate in decisions about their communities and the region.**

In order to realize the mobilization envisioned in this report, a dynamic Metropolitan Chicago Regional Planning Network needs to be created to focus regional planning initiatives, to assure access to basic information, and to facilitate effective communication on key issues across the region. Such a regional planning network would:

- Create a common database of basic information needed for planning, such as zoning laws and building codes, impact fees and environmental requirements, cable franchises, and many other areas of common concern;
- Be a resource for regional bodies and their constituents, local officials, and many others around key policy questions and priorities;
- Facilitate the examination of issues and the mobilization to address issues of common concern across the region;
- Encourage the development of Web sites by cities, regional bodies, and jurisdictions in the region as a necessary complement to the Metropolitan Chicago Regional Planning Network; and,
- Provide models and best practices for how government and community networks can effectively provide services and information to citizens and business, be more responsive to community needs, improve education, and promote greater participation in government.

A Metropolitan Chicago Regional Planning Network can be particularly powerful if it is used as a focal point for examining key regional issues and providing information. The challenge goes to the Metropolitan Planning Council, the Civic Federation, the Civic Committee of the Commercial Club of Chicago, the municipal conferences, regional Chambers of Commerce, and many others to launch this initiative.

## 10. IMPACTING METROPOLITAN CHICAGO'S QUALITY-OF-LIFE

Families and friends are staying in touch with each other by electronic mail, resulting in an increased level of communication. Children are reaching their parents throughout the day with pagers and cellular phones, resulting in assurances of safety and support. Business people are communicating with management, clients, and suppliers day and night through cellular phones, electronic mail, and the World Wide Web, resulting in increased productivity and efficiency. Interest groups are coming together for electronic discussions across geographic, socio-economic, and age boundaries. Many disabled are finding connections through Web sites and electronic mail, resulting in increased access and opportunities.

**"The challenge is to enhance the opportunities for improving the quality-of-life, while facing the negatives."**

The flow of information and the expanding access to more and more people anywhere at any time is influencing recreation and entertainment choices, culture and community, the cost of living and employment opportunities, work expectations, volunteer and political endeavors, government services and safety. It may even affect the rhythm of our days and our sense of self.

As the digital network infrastructure becomes more refined and available, its impact on quality-of-life is increasing dramatically[19]. Both the opportunities and the concerns are becoming more complex. The challenge is to enhance the opportunities for improving the quality-of-life, while facing the negatives.

**Individual Choices**

Log onto the World Wide Web on any day and the information that can be secured is just that, worldwide. Anyone is able to find out about astronomy and history, health and the environment, retirement options and investments, corporations and census data, cultural events and the arts, physics and literacy, Uganda and Mongolia, the Middle Passage and exploration of outer space, shopping options and soap operas, Spanish and Urdu.

There are also expanding options for entertainment and recreation, both as a source of information and as a vehicle of delivery. Video on-demand and live performances over the Internet will become a reality, network games are already available, museums and galleries have interactive tours, and anyone could visit the Chicago Auto Show this year through a Web site. Look at the Web site for any major city and the schedule of concerts and shows, conferences and events, monuments and historic buildings, and exhibits and lectures are likely to be there.

**"Our sense of community may be most deeply affected, both positively and negatively, by technology."**

The material available on the World Wide Web ranges from the most glorious to the most perverse. Going casually through the Web, one can find both the most sublime art and the most obscene chat rooms. While protecting First Amendment rights, the challenge is to sort through the best uses of the Internet and guard against the corrupt. Congress and other leaders, parents and educators, have not yet found the best mechanism for addressing these issues, but continuing discussion should evolve practices and principles that make good public policy and private choice.

**Community and Neighborhoods**

Our sense of community may be most deeply affected, both positively and negatively, by technology. In a region where communities and neighborhoods have great historic importance and strength, people may be pulled away to join virtual communities over the Internet that are shaped around common interests and concerns. It is less and less necessary to live near one another to share common experiences. On-line computer communities require time and commitment equal to that of local interaction, often taking people away from traditional social groupings. But, community networks, other Web sites, and group communications that bring together organizations and community services, elected officials and neighborhood leaders, services and learning resources can promote a greater sense of belonging to the physical community in which we live.

**Safety and Security**

The digital network infrastructure has significant potential for both improving, as well as jeopardizing, our safety and security. One positive example is the Chicago Community Policing Program. Northwestern political science professor Wesley Skogan reports that the ICAM2 criminal statistics and mapping program gives patrol officers the ability to do crime analysis by neighborhood or block, and criminal histories by address. Portable data terminals in cars streamline dispatching and report writing. A new Human Resources Information System is on every commander's desk with information about who is on duty and where. Voice mail and cellular phones enable citizens to communicate directly with patrol officers. And, a fiber-optic network that is the most advanced in the country supports the new 911 center. The result is strong anecdotal evidence of crime reductions and the increasing effectiveness of the community-policing program.

**"The digital network infrastructure has significant potential for both improving, as well as jeopardizing, our safety and security."**

At the same time, many are concerned about the increasing amounts of data collected on individuals, the sophistication with which people's movements and activities can be recorded or observed, and the real threat over the Internet from those looking for unsuspecting victims. These are difficult issues that demand continuing dialogue and thoughtful actions.

**Privacy**

The loss of privacy is among the most discussed consequences of technological development. The need to balance the desire of corporations, institutions, and government to have additional information, such as the purchase tracking information currently used by the local Dominick's and Jewel grocery stores, with our right to privacy is evoking considerable tension. The newest phone feature, the ability to track anyone through any series of home, office, and cellular phones, suggests a similar dilemma. The records that are created through the use of electronic mail and the Internet have created particularly troublesome issues concerning the invasion of individual privacy. Privacy is an issue that merits considerable debate and continual monitoring as it is balanced through government, the courts, and personal interactions.

**Balancing Work and Personal Life**

Metropolitan Chicago already experiences the continuing activity of all "global cities." The traditional sense of night and day has become blurred for people who can monitor on a minute-by-minute basis the political and economic activities of the world marketplace. In little more than ten years, cellular phones have gone from a rare luxury to a necessity for busy executives, a "safety net" for travelers, a regular contact point for people moving to multiple locations throughout the day, and the only phone number for many consultants. So, too, electronic mail is cutting across time and space to make constant communications possible. And, faxes move print messages around the globe, superseding national boundaries, jurisdictions, corporate structures, and institutions.

Yet, the negatives have not been explored in the same way. Increasingly, workers, who once thought that technology would provide more leisure time, find themselves "on duty" for more and more hours each day. Pages, cellular phone calls, voice and electronic mail messages, and faxes are independent of time, increasing the number of hours many are expected to work. Where it was once understood that there was a limited amount of work that could be accomplished before the end of the traditional work day, now there is an expectation that the work day will end when the communications are answered. With the advent of more and more communications, the cycle of work grows to occupy more and more of the day. The stress this places on people is just now being explored.

**"The loss of privacy is among the most discussed consequences of technological development."**

***PUTTING OUR MINDS TOGETHER*** ***we can leverage the digital network infrastructure to improve the quality-of-life for everyone in the region. It is a goal that ties together our common concerns for productive and stimulating employment opportunities, a strong regional economy, affordable housing in safe neighborhoods, quality education from pre-school through college, reliable and efficient transportation, a lively arts and entertainment scene, and a variety of recreation options.***

One conclusion to draw from this report is that the digital network infrastructure can be a powerful tool for helping us all realize our common goal of making the Metropolitan Chicago region an even more attractive place to live, work, and raise a family. Improving the quality-of-life in the region, with its many facets, simply will not be influenced through singular recommendations. Rather, it demands a sustained dialogue across all sectors.

Business and industry, religious and community leaders, educators, government, and citizens must PUT THEIR MINDS TOGETHER to examine the profound impact access to the digital network infrastructure will have on individuals and communities, work and home. They must formulate a research agenda to explore how access to the digital network infrastructure is affecting the quality-of-life for the region, and to shape thoughtful policies and reasoned actions. The dialogue can be enhanced and the research strengthened by the very technology that is being examined, building an agenda for and facilitating exchanges, position papers, and strategies across the Metropolitan Chicago Regional Planning Network.

## PUTTING OUR MINDS TOGETHER: An Action Plan

"PUTTING OUR MINDS TOGETHER: The Digital Network Infrastructure and Metropolitan Chicago" examines the particular opportunities and challenges for Metropolitan Chicago to leverage the emerging digital network infrastructure. The report identifies advantages the region can successfully exploit, examines the social impacts, and suggests the potential actions to guide the development of the digital network infrastructure.

The next step is to foster strategic plans and implementation schedules by public officials, policy makers, corporate and community leaders to secure Metropolitan Chicago as the dynamic nexus of the Information Age.

**"We challenge you to identify those areas where you can have the greatest impact."**

### Five Principal Policy Recommendations

The five principal policy recommendations outlined in the Introduction of this report should be the focus of this endeavor:

I. Build the Metropolitan Chicago Digital Network Infrastructure;

II. Advance the region's Information Economy "Ecosystem" and mobilize business, industry, and government around strategic targets for technology-based economic development;

III. Use technology to strengthen elementary and secondary education, higher education, and workforce training;

IV. Implement aggressive plans to mitigate the "digital divide" that might exclude some segments of the population; and

V. Establish the Metropolitan Chicago Regional Planning Network as a catalyst for regional information technology planning.

Regions that have the necessary infrastructure and a strategic plan will be able to meet the challenges of the 21st century. Other regions, like a 19th century community without a railroad station or a 20th century city off the interstate highway system, will not.

***The strategic plan requires the following actions. Comparative research[15] also demonstrates the necessity of vision, leadership, and investment. Each one of us can make important contributions to the effort. We challenge you to identify those areas where you can have the greatest impact.***

### Business, Industry, and Electronic Commerce

The convergence of money, commerce, personal computers, and the digital network infrastructure is creating new market opportunities that can enhance the competitiveness of the region's diverse businesses and industries.

| ACTION ITEM | YES |
|---|---|
| 1. Create aggressive strategies for capitalizing on Electronic Commerce. | ☐ |
| • Help businesses understand the potential benefits and opportunities. | ☐ |
| • Identify and eliminate technical barriers to accessing markets. | ☐ |
| • Assure access to the digital network infrastructure for all businesses and consumers. | ☐ |
| 2. Assure an effective legal framework for Electronic Commerce. | ☐ |

## Technology-based Economic Development

Metropolitan Chicago is a place where ideas, information, money, people, and services flow together, creating new opportunities for technology-based economic development. The challenge for the region is to understand and strengthen its Information Economy "Ecosystem" and focus our technology-based economic development on strategic opportunities.

| ACTION ITEM | YES |
|---|---|
| 1. Advance technology-based economic development by: | ☐ |
| • Deploying the digital network infrastructure. | ☐ |
| • Expanding the computer services and support industry. | ☐ |
| • Strengthening business/university research partnerships. | ☐ |
| • Organizing to strengthen the seven core elements of the Information Economy "Ecosystem." | ☐ |
| • Making Metropolitan Chicago technology assets widely known. | ☐ |
| 2. Exploit targeted opportunities, including next-generation technologies, network applications, and content development in: | ☐ |
| • Telecommunications<br>• Life Sciences<br>• Electronics<br>• Computer Software<br>• Information Technology and Services<br>• Advanced Materials<br>• Environmental Technology<br>• Transportation and Resource Management | |
| 3. Assure action to avoid the potential "Digital Divide." | ☐ |

## Transportation, Land Use and Resource Management System

Demands on the transportation infrastructure and the ability to meet these demands will be guided by technology. The digital network infrastructure can also have a profound impact on land use and be a powerful tool for resource management.

| ACTION ITEM | YES |
|---|---|
| 1. Fund and deploy the Intelligent Transportation System (ITS). | ☐ |
| 2. Take advantage of the region's ITS experience to develop entrepreneurial opportunities worldwide. | ☐ |
| 3. Create a forum to develop an agenda for land use and resource management policies that focuses on the following: | ☐ |
| • How transportation, employment, and land use is impacted by access to the digital network infrastructure. | ☐ |
| • How policies and decisions about access to the digital network infrastructure can block or encourage land use. | ☐ |
| • How planned infrastructure repair and construction can be leveraged to extend the digital network infrastructure. | ☐ |
| • How zoning is affected by changes in commercial and home business practices. | ☐ |
| 4. Examine effective uses of technology for resource management and plan to deploy beneficial new applications. | ☐ |

## Building the Digital Network Infrastructure

Who will make the investment to assure that the digital network infrastructure reaches all businesses, communities, and individuals? Everything from laying fiber optic cable, to installing wireless towers, to buying digital switches, to developing and installing new data transmission technologies requires targeted actions:

| ACTION ITEM | YES |
|---|---|
| 1. Create incentives and strategies to accelerate and coordinate investments in building the digital network infrastructure, including: | ☐ |
| • Tax incentives or user assistance for underserved areas. | ☐ |
| • Enterprise Zones and Tax Increment Financing. | ☐ |
| 2. Organize joint public/private community initiatives to aggregate demand. | ☐ |
| 3. Establish a regional clearinghouse for information and technical advice for communities, other jurisdictions, and educational/nonprofit consortia. | ☐ |

## Workplace and Training

The most desirable and high-paying jobs are being created in the sectors dependent upon information technology. Today, 65% of all U.S. workers are using some type of information technology in their jobs. By 2000 this is estimated to reach 95%.

| ACTION ITEM | YES |
|---|---|
| 1. Improve access to information regarding job skills standards and programs to support training and lifelong learning. | ☐ |
| 2. Expand the use of technology in all training /lifelong learning programs. | ☐ |
| 3. Assure access to the digital network infrastructure for all education and training programs. | ☐ |
| 4. Examine and understand the implications of technology for the workplace. | ☐ |

## Higher Education

Colleges and universities, institutes and professional schools are developing imaginative new ways to apply technology to improve teaching and learning. New ideas and discoveries from higher education offer great potential for business and industry.

| ACTION ITEM | YES |
|---|---|
| 1. Support and deploy the Illinois Century Network. | ☐ |
| 2. Support expanded faculty training and curriculum development. | ☐ |
| 3. Create a clearinghouse / resource on Internet programs and courses. | ☐ |
| 4. Strengthen business / industry partnerships for technology sharing and transfer. | ☐ |

## Elementary and Secondary Education

Overall, Illinois is a latecomer to supporting the integration of technology in elementary and secondary education. The challenge is to effectively use technology to improve K-12 education.

| ACTION ITEM | YES |
|---|---|
| 1. Accelerate connections to the digital network infrastructure for every classroom. | ☐ |
| 2. Increase technical support and services for the schools. | ☐ |
| 3. Expand professional development to help teachers use technology. | ☐ |
| 4. Pursue creative projects collaboratively. | ☐ |
| 5. Provide access in libraries, community centers, neighborhood sites. | ☐ |
| 6. Make available affordable access to the digital network infrastructure from homes. | ☐ |

## Health Care

As medical advances out pace practice, telemedicine across the digital network infrastructure offers a way to substantially increase access to quality, affordable health care and can provide entrepreneurial opportunities for Metropolitan Chicago.

| ACTION ITEM | YES |
|---|---|
| 1. Connect health care facilities to the digital network infrastructure. | ☐ |
| 2. Advance new telemedicine strategies. | ☐ |
| 3. Create systems to share medical information and patient records. | ☐ |
| 4. Foster entrepreneurial opportunities for health and biotechnology applications. | ☐ |

## Government and Community Networks

There are voices to be heard, information to be shared, and new visions to be advocated. Connecting citizens, policy makers, corporate leaders, community organizations, researcher, and planners around common issues is one the greatest opportunities of the digital network infrastructure.

| ACTION ITEM | YES |
|---|---|
| 1. Launch a Metropolitan Chicago Regional Planning Network to: | ☐ |
| • Establish a common database of information for regional planning. | ☐ |
| • Serve as a resource for policy questions and priorities. | ☐ |
| • Facilitate discussion and mobilization on issues of common concern. | ☐ |
| • Model best practices for community networks. | ☐ |
| • Encourage Web sites for all municipalities and jurisdictions. | ☐ |

## Quality-of-Life

The flow of information and expanding access to more and more citizens everywhere, at any time, is influencing recreation and entertainment choices, culture and community activities, the cost of living and employment opportunities, work expectations, volunteer and political endeavors, government services and safety.

| ACTION ITEM | YES |
|---|---|
| 1. Create a regional dialogue regarding the impact of the digital network infrastructure on: | ☐ |
| • Individual choices. | ☐ |
| • Community and neighborhoods. | ☐ |
| • Safety and security. | ☐ |
| • Personal privacy. | ☐ |
| • Balancing work and personal life. | ☐ |
| 2. Formulate a research agenda to explore how access to the digital network infrastructure is affecting the quality-of-life for the region. | ☐ |

***The challenge and the opportunity is to mobilize around a strategic plan that effectively leverages the digital network infrastructure to the advantage of the Metropolitan region. PUTTING OUR MINDS TOGETHER it is possible.***

> ***"The challenge and the opportunity is to mobilize around a strategic plan..."***

## REFERENCES


1. Arader, Harry, "Illinois State Strategic Plan for the Biotechnology Industry; Phase I Report," Chicago: The Centromere Group, December 4, 1997.

2. Arrowsmith, Colin, and William Cartwright, "The Evolution of Information Technology and Telecommunications in Australia for Environmental Management," Paper presented to the E*Space IV Conference, "CyberChoices: Determining Sociotechnical Futures," Valbonne-Sophia Antipolis, France, May 25-29, 1998.

3. Beamish, Anne, "Communities On-line: Community-Based Computer Networks," Massachusetts Institute of Technology, Department of Urban Studies and Planning in Partial Fulfillment of the Requirements for the Degree of Master in City Planning, February 1995.

4. Benton Foundation, "State and Local Strategies for Connecting Communities," Washington, D.C., November, 1996.

5. Bollier, David (Rapporteur), "The Future of Electronic Commerce: A Report of the Fourth Annual Aspen Institute Roundtable on Information Technology," Washington, D.C., The Aspen Institute, 1996.

6. Borsuk, Mark, "What is the Impact of INFOTECH on Commercial Real Estate?," Stanford Business School Alumni Association, January 16, 1996.

7. Burnham, James B., "The Growing Impact of Global Telecommunications on the Location of Work,"Center for the Study of American Business, Washington University, St. Louis, October, 1997.

8. Bytheway, Andy, "Electronic Markets: A Framework for the Analysis of Trade and its Potential for Development," Cranfield School of Management, Cranfield University, UK, November 1995.

9. Castells, Manuel, "Relationships of Advanced Information Technology, Economic Organization, and the Social Structure of Cities," in "Summary of the Colloquium on Advanced Information Technology, Low-Income Communities, and the City," Massachusetts Institute of Technology, Department of Urban Studies and Planning, March 8, 1996.

10. "Chicago's Top 100 Companies, 1998." Chicago Tribune, Sunday, May 3, 1998, Section 18.

11. Clinton, William Jefferson, and Albert Gore, Jr., "A Framework for Global Electronic Commerce," Washington D.C., July 18, 1997 <http://www.ecommerce.gov/framework.htm>.

12. Cohen, Jodi B., "Time Inc. In Major Overhaul of its New Media Operations," Web Week, Vol. 3, Issue 11, April 21, 1997.

13. Cole, Rick and Judy Corbett, "Building Livable Communities: New Strategies for Promoting Urban Infill," UrbanLand, September, 1996.

14. CommerceNet/Nielsen Media Research, "Electronic Commerce on the Rise According to CommerceNet/Nielsen Media Research Survey," New York, New York, December 11, 1997 <www.commerce.net/news/press/121197.html>.

15. Corey, Kenneth, College of Social Science, Michigan State University, "Creating and Controlling Cyber Communities in Southeast Asia and the United States," a presentation to the Regional and Urban Development Conference, Regional Science Association International, Wellington, New Zealand, December 8-12, 1997.

16. Croteau-Chonka, Clarisse, "Technology Forcing Transition: The Future of Education in Chicago." January 1998, *Think Paper* for "Putting Our Minds Together: The Digital Network Infrastructure and Metropolitan Chicago."

17. Daley, William, U.S. Secretary of Commerce, "The Emerging Digital Economy, " Washington, D.C., April 17, 1998 <http://www.ecommerce.gov/emerging.html>.

18. Department of Planning & Development, the City of Chicago, "Request for Proposals For the Redevelopment or Development of the City of Chicago's Information Technology District," February 23, 1998.

19. Dertouzos, Michael L., What Will Be: How the New World of Information Will Change Our Lives, New York, NY, Harper Collins Publishers, 1997.

20. DeVol, Ross C., "Metro Growth: How Dependent on High-Tech Success?," Regional Forecast Quarterly, WEFA Group, Inc., Spring, 1997.

21. Duesterberg, Thomas, "Addicted to Data: The Need for More Bandwidth on the Information Superhighway, " Hudson Institute, January 8, 1998 <http://www.hudson.org/bandwidth.htm>.

22. Einemenn, Edgar, "Global Trends and Regional Strategies; Telecommunications, Information Technology and the Future," a report for the Ministry of Harbours, International Transport and Foreign Trade of the Regional State of Bremen, Germany, November, 1997.

23. Fidelman, Miles, Telecommunications Strategies for Local Government: A Practical Guide, Government Technology Press, 1997.

24. Frazer, Karen and Steven Wildman, Associate Professor, "Implications for Chicago Region: Education and Training as They Affect Employment and Workplace Issues." January 1998, *Think Paper* for "Putting Our Minds Together: The Digital Network Infrastructure and Metropolitan Chicago."

25. Garcia, Virginia and Kou Yukawa, Fujitsu Research Institute, Tokyo, Japan, "The Impact of Information Technology on U.S. Metropolitan Areas: Case Studies of Chicago, New York, San Francisco, and Atlanta," a presentation to the Western Regional Science Association, Monterey, California, February 18-22, 1998.

26. Goslee, Susan, "Losing Ground Bit By Bit: Low-Income Communities and the Information Age," Benton Foundation, Washington D.C. June 1998.

27. Graham, Stephen and Simon Marvin, Telecommunications and the City, London, Routledge, 1996.

28. Graham, Stephen, "Telecommunications and the Future of Cities: Debunking the Myths," in Focus on the Future Newsletter, AT&T Information Services, October-December, 1997.

29. Halverson, Richard and Louis Gomez, "Technology and Schools." January 1998, *Think Paper* for "Putting Our Minds Together: The Digital Network Infrastructure and Metropolitan Chicago."

30. Hoffman, Donna, William D. Kalsbeek, and Thomas Novak, "Internet Use in the United States: 1995 Baseline Estimates and Preliminary Market Segments," Project 2000, Vanderbilt University, April 12, 1996.

31. Hoffman, Donna, Thomas Novak, and Patrali Chatterjee, "Commercial Scenarios for the Web: Opportunities and Challenges," Journal of Computer-Mediated Communication, Vol. 1, Issue 3, December, 1995.

32. Horan, Thomas, "The Urban Planning Implications of Advanced Information Technologies," in "Summary of the Colloquium on Advanced Information Technology, Low-Income Communities, and the City," Massachusetts Institute of Technology, Department of Urban Studies and Planning, April 1, 1996.

33. Ibrahim, Youssef M., "In Old England a Silicon Fen: Cambridge as a High Tech Outpost," New York Times, January 4, 1998.

34. Illinois State Board of Education, "State of Illinois K-12 Information Technology Plan," Springfield, Illinois, 1996 <http://www.isbe.state.il.us/learn-technology/technopages/ncsa/exec.html>.

35. Illinois Board of Higher Education, Higher Education Technology Task Force, "The Illinois Century Network: New Dimensions for Education in Illinois," Springfield, Illinois, 1997.

36. Illinois Coalition, "The 1997 Illinois High Tech Yearbook," Chicago, Illinois, 1997.

37. Information Technology Association of America, "Help Wanted: The IT Workforce Gap at the Dawn of the New Century," Arlington, Virginia, 1996.

38. IBM Corporation, "Living in the Information Society: White Papers," Armonk, New York, Office of Public Affairs, 1996-98 <http://www.ibm.com/ibm/publicaffairs>.

39. Kotkin, Joel, "Southern California in the Information Age," Pepperdine University Institute for Public Policy and LaJolla Institute, June, 1997.

40. Leadership Technology Workshop hosted by United States Senator Richard Durbin, with Northwestern University, the University of Illinois and the University of Chicago, January 10, 1998, Evanston, Illinois <http://www.nwu.edu/it/leadershiptechworkshop.html>.

41. Malinowski, Jamie, "Generation WWW," Digital TIME, New York, New York: November 3, 1997

42. Markoff, John, "Will Commerce Flourish Where Rivers of Wire Converge?" New York Times, December 8, 1997.

43. McConnaughey, James and Wendy Lader, "Falling through the Net II: New Data on the Digital Divide," U.S. Commerce Department National Telecommunications and Information Administration, July, 1998. <http://www.ntia.doc.gov/ntiahome/net2/falling.html>

44. McDonald, John F., "Fundamentals of Urban Economics," Prentice Hall, 1997.

45. McKnight , Lee W., Joseph P. Bailey, "An Introduction to Internet Economics" Journal of Electronic Publishing, Vol. 2, University of Michigan 1995.

46. Metropolitan Planning Council, "Telecommunications Infrastructure, Regulation, and Chicago: An Overview and Future Challenges," Chicago, Metropolitan Planning Council, April, 1998.

47. Mills Edwin, "Interactions Between Information Technology and Metropolitan Growth." December 1997 *Think Paper* for "Putting Our Minds Together: The Digital Network Infrastructure and Metropolitan Chicago."

48. Mitchell, William J., City of Bits: Space, Place, and the Infobahn, The MIT Press, Cambridge, MA 1995 <http://www-mitpress.mit.edu/City_of_Bits/>

49. Morino Institute, "Assessment and Evolution of Community Networking," 1994, Reston, VA. <http://www.morino.org/publications/assessment.html>.

50. Niles, John S., "Beyond Telecommuting: A New Paradigm for the Effect of Telecommunications on Travel," U.S. Department of Energy, September 1994.

51. Novak, Thomas and Donna Hoffman, "Bridging the Digital Divide: The Impact of Race on Computer Access and Internet Use," Project 2000, Vanderbilt University, February 2, 1998.

52. The NPD Group, "Media Metrix Publisher's Complete December Rankings of Top 25 Worldwide Web Sites at Home and at Work," New York, New York: January 20, 1998 <http:www.npd.com/corp/press/press-mm40.htm>.

53. Nunn, Samuel, and Robert Warren, "Metropolitan Computer Services Infrastructure and Economic Development Capacity in the Information Society," Economic Development Quarterly, Vol. 11, No. 4, November, 1997.

54. Office of Technology Assessment, United States Congress, "The Technology Reshaping of Metropolitan America," Washington, D.C., 1995.

55. Olson, Robert L., "Mobility for the 21st Century: A Blueprint for the Future," American Public Transit Association, October, 1996.

56. Rheingold, Howard, The Virtual Community: Homesteading on the Electronic Frontier, Reading, Mass. Addison-Wesley Publishing Co., 1993.

57. Progress and Freedom Foundation, "The Digital State: How State Governments are Using Digital Technology," Washington, D.C., August, 1997

58. Sawhney, Mohan; Guy Cipriani, and Scott Evans, "Positioning for the Future: Metropolitan Chicago's Place in the Information Economy." January 1998, *Think Paper* for "Putting Our Minds Together: The Digital Network Infrastructure and Metropolitan Chicago."

59. Sears, Gary, "Technopole Survey: Interviews with Community Leaders." Ottawa, Canada, September 10, 1997.

60. Sun Microsystems, "Sun Systems Help Time Warner's Pathfinder Become Leading Commercial Site of Internet," Mt. View, California, May 23, 1995.

61. U.S. Department of Commerce, "Telemedicine Report to Congress," National Telecommunication and Information Administration (NTIA), January 31, 1997 <http://www.ntia.doc.gov/reports/telemed/cover.htm>

62. Valdiserri, Susan, "Implications of the New, Mobile Work Environment." February 1998, *Think Paper* for "Putting Our Minds Together: The Digital Network Infrastructure and Metropolitan Chicago."

63. Van, Jon, "High Tech House Calls May Bring Relief for Patients and Busy Doctors," Chicago Tribune, February 8, 1998, Section 5.

64. Vargas, Alexia, "The College Connection: At Northwestern University, Almost All the Students are On-Line," Wall Street Journal, November 17, 1997.

65. Wigand, Rolf, and Robert Benjamin, "Electronic Commerce: Effects on Electronic Markets," Journal of Computer-Mediated Communication, Vol. 1, Issue 3, December, 1995.

66. Wilhelm, Anthony, "Hispanic Computer & Internet Study," Tomas Rivera Policy Institute, April 1998.

67. Wolpert, Julian, "Center Cities as Havens and Traps for Low-Income Communities: The Potential Impact of Advanced Information Technology," in "Summary of the Colloquium on Advanced Information Technology, Low-Income Communities, and the City," Massachusetts Institute of Technology, Department of Urban Studies and Planning, February 21, 1996.

68. Ziliaskopoulos, Athanasios, "Moving Transportation into the Information Age: Transportation and the Next Millennium." January 1998, *Think Paper* for "Putting Our Minds Together: The Digital Network Infrastructure and Metropolitan Chicago."

## Graphics Credits

vBNS network map reprinted with the permission of MCI Telecommunications Corporation. Copyright 1998 MCI Telecommunications Corporation. All rights reserved. This material is based upon work supported by the National Science Foundation under Grant Number NCR 9321047. Any opinions, findings, and conclusions or recommendations expressed in this material are those of the author(s) and do not necessarily reflect the views of the National Science Foundation.

STARTAP network map image by Carlton Bruett, National Center for Supercomputing Applications, University of Illinois at Urbana-Champaign. Image provided courtesy of the Chicago-based Science, Technology, And Research Transit Access Point (STAR TAP), with major funding provided by National Science Foundation award #ANI-9712283. <http://www.startap.net>

MREN network map reprinted with the permission of the Metropolitan Research and Education Network. Copyright 1997, MREN.ORG. All rights reserved.

Six County Chicago Metropolitan Area map reprinted with the permission of LaSalle Advisors Capital Management, Inc. Investment Research. Copyright January 1997. All rights reserved.

## CONTRIBUTORS

"Putting Our Minds Together: The Digital Network Infrastructure and Metropolitan Chicago" drew upon the work of many people. Northwestern University faculty were invited to prepare "think papers" on key issues related to the impact of digital networking and information technology. Other University faculty were consulted through in-depth interviews. Many joined, along with Metropolitan Planning Council members and staff, in two seminars on the topic. Three Kellogg graduate students spent many hours researching various facets of the report. And, experts from Michigan State University, the University of Illinois at Chicago, and the Chicago Consortium on Higher Education contributed.

The development of this report was truly a collaborative effort. Great appreciation and credit goes to everyone who shared his or her scholarship or reflections. It could not have been done without them.

The authors also thank Jacques Gordon and his colleagues on the Regional Development Committee for the Metropolitan Planning Council, Scott Goldstein, MPC Regional Development Director, and MarySue Barrett, MPC President, for the many hours they spent shepherding, counseling, and commenting on the various sections of this report. Many other MPC corporate members and partners also shared their perspectives and input.

The authors, however, accept full responsibility for the final report. We hope we did justice to all of your work, and that this report results in new opportunities being identified and old challenges being faced anew. Such an outcome is the best reward.

*Patricia Widmayer*
*Gary Greenberg*
*August, 1998*

### "Think Paper" Contributors

http://www.nwu.edu/it/metrochicago/ and http://www.metroplanning.org/

Croteau-Chonka, Clarisse, Director, Chicago Consortium for Higher Education, "Technology Forcing Transition: The Future of Education in Chicago."

Frazer, Karen. Northwestern University Graduate Student; and Steven Wildman, Associate Professor, School of Speech and Director, Northwestern University Program in Telecommunications, Science, Management, and Policy, "Implications for Chicago Region: Education and Training as They Affect Employment and Workplace Issues."

Halverson, Richard, Northwestern University Graduate Student; and Louis Gomez, Associate Professor, School of Education and Social Policy, and Computer Science, "Technology and Schools."

Mills Edwin, Professor of Finance Emeritus, Kellogg Graduate School of Management, and Director, Center for Real Estate Research, "Interactions Between Information Technology and Metropolitan Growth."

Sawhney, Mohan, Assistant Professor of Marketing, Kellogg Graduate School of Management; Guy Cipriani, Kellogg Graduate School of Management Master's Candidate; and Scott Evans, Kellogg Graduate School of Management Master's Candidate, "Positioning for the Future: Metropolitan Chicago's Place in the Information Economy."

Valdiserri, Susan, IBM Adjunct Professor of Leadership, "Implications of the New, Mobile Work Environment."

Ziliaskopoulos, Athanasios, Louis Berger Junior Professor of Civil Engineering and Transportation, McCormick School of Engineering and Applied Science, "Moving Transportation into the Information Age: Transportation and the Next Millennium."

## Consultation and Discussion with Scholars and Policy Makers

Kenneth Corey, Dean, College of Social Science, and Professor of Urban Planning, Michigan State University

Paul Dillon, Manager Director-Corporate Services, American Express Tax & Business Services, Inc.

Joseph Feinglass, Research Associate Professor, Division of General Internal Medicine, Northwestern University Medical School

Gary Fresen, Attorney, Baker & McKenzie, and Board member, Chicagoland Chamber of Commerce

Linda Goodman, Principal, Goodman Williams Group

Elizabeth Hahn, Director of Biostatistics and Data Management Systems, Center of Outcomes Research and Education, Northwestern Evanston Healthcare

Donald Haider, Director, Center for Public and Nonprofit Management, Kellogg Graduate School of Management, Northwestern University

Albert Hunter, Professor of Sociology, College of Arts and Sciences, Northwestern University

Elmer Johnson, Partner, Kirkland & Ellis

Frank Koppelman, Professor of Civil Engineering, McCormick School of Engineering and Applied Sciences, Northwestern University

Lewis Manilow, Investor

John McDonald, Professor of Economics, University of Illinois/Chicago

Morteza Rahimi, Vice President for Information Technology, and Professor of Electrical Engineering and Computer Science, Northwestern University

Allan Schnaiberg, Professor of Sociology, College of Arts and Sciences, Northwestern University

Joseph Schofer, Chairman and Professor of Civil Engineering, McCormick School of Engineering and Applied Sciences, Northwestern University

David Schultz, Director, Infrastructure Technology Institute, Northwestern University

Wesley Skogan, Professor of Political Science, College of Arts and Sciences, Northwestern University

Paul Tang, Medical Director of Information Systems and Associate Professor of Medicine, Northwestern University Medical School

Thomas Thornton, Executive Director, Illinois Coalition

Priscilla A. (Pam) Walter, Partner, Gardner, Carton & Douglas

Henry Webber, Vice President for Community Affairs, The University of Chicago

Carole Lane Widmayer, Midwest Sales and Marketing Manager, Cahners Business Information Systems

## The Metropolitan Planning Council Telecommunications Working Group

Jacques Gordon, Managing Director, LaSalle Advisors, Ltd., Chair

Jean Allard, Sonnenschein Nath & Rosenthal

David Baker, Vice President for External Affairs, Illinois Institute of Technology

Mike Farmer, Manager of External Relations, Ameritech Illinois

Marita S. Grobbel, Relationship Executive, Unisys Corporation

M. Hill Hammock, COO & Chief Credit Office, LaSalle National Bank

Geoff Hewings, REAL, University of Illinois

Thomas H. Klier, Senior Economist, Federal Reserve Bank of Chicago

Ray O'Connell, Vice President-Public Affairs, AT&T

Tom Phillips, Vice President-Law and Government Affairs, AT&T

Thomas Reiman, Senior Vice President-Public Policy, Ameritech

Ray Romero, Competitive Strategies Group

Patrick Schaefer, National Director of Sports Consulting Services, Ernst & Young

Lawrence Stricking, Office of General Counsel, Federal Communications Commission

Alisa Miller, MPC Telecommunications Intern

## THE AUTHORS

**Gary Greenberg** is Director of Planning and Development for Information Technology at Northwestern University. He works on special projects to develop opportunities for using Information Technology to enhance learning, research, and administration at the University. He is also Director of the Collaboratory Project, a Northwestern University initiative funded by the Ameritech Foundation to help education, cultural, and nonprofit organizations use network technologies to advance education.

Gary received his B.A. from Stanford University and his Ph.D. from Harvard University. He has taught at Yale University, Rutgers University, and Northwestern University, where he also managed the Advanced Technology Group.

**Patricia Widmayer** is Manager of Development for Information Technology, Northwestern University, and also Executive Director of the North Suburban Higher Education Consortium, a collaboration of 27 colleges and universities in Chicago's north and northwest suburbs sharing programs and projects through technology.

Prior to joining Northwestern, Patricia was President and Senior Consultant for Widmayer & Associates, a Chicago consulting firm working with colleges and universities, national associations and state agencies on strategic planning and public policy issues. From 1973-1985, she was policy specialist and staff director for the Speaker of the Michigan House, Congressman Bob Carr, three Michigan Superintendents of Public Instruction, and the Governor of Michigan. She also was Executive Director of the Governor's Commission on the Future of Higher Education in that state, a high school teacher and a university faculty member, and holds a B.A. in Political Science, and a Ph.D. in Education from Michigan State University.

## Appendix

## AN INTRODUCTION TO DIGITAL NETWORKING

### Digital Bits and Bytes

The basic unit of digital information is the binary digit, or ***bit***. A ***bit*** can be thought of as a switch that is either on or off and can represent two values (0, 1). Bits are combined to represent more than two values. For example, the four possible combinations of two bits (00, 01, 10, 11) can be used to represent four values. In general, **n** number of bits can be used to represent $2^n$ values. Four bits can represent $2^4=16$ values, eight bits can represent $2^8=256$ values.

### Digital Information

When text, pictures/graphics, sound, or video/film is ***digitized,*** it is represented as a series of numbers. This series of numbers can be converted into a series of digital bits that can be used to recreate the original.

**175 –> 10101111**
**212 –> 11010100**

### Digitizing Text

In order to digitize text, each character is converted into a number which can be represented by a series of bits. The ASCII standard (American Standard Code for Information Exchange) assigns a specific number to each character. For example:

| | *H* | *o* | *w* | *<space>* | *a* | *r* | *e* | *<space>* | *y* | *o* | *u* | *?* | *<return>* |
|---|---|---|---|---|---|---|---|---|---|---|---|---|---|
| ASCII: | 72 | 111 | 119 | 32 | 97 | 114 | 101 | 32 | 121 | 111 | 117 | 255 | 13 |

### Digitizing Graphics

In order to digitize a picture, the picture is divided into a very fine grid. Each box of the grid, or ***pixel*** (picture cell), is assigned a color and intensity that can be represented by a specific value. The computer can color the pixels of the grid so quickly that it is seen as a still image.

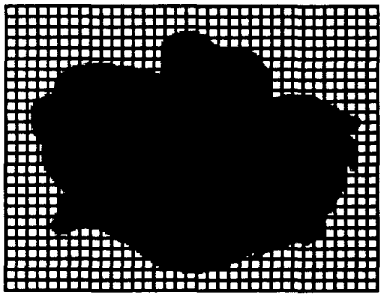

The finer the grid, the more pixels will be used to create the picture. The picture will look better because there is more information. The greater the number of different colors that can be represented, the better the picture will look.

**Digitizing Sound**
In order to digitize sound, the continuous sound wave that you may have seen on an oscilloscope is divided into very short durations of time. The intensity of the sound wave is measured for each duration. Each value is represented by a number.

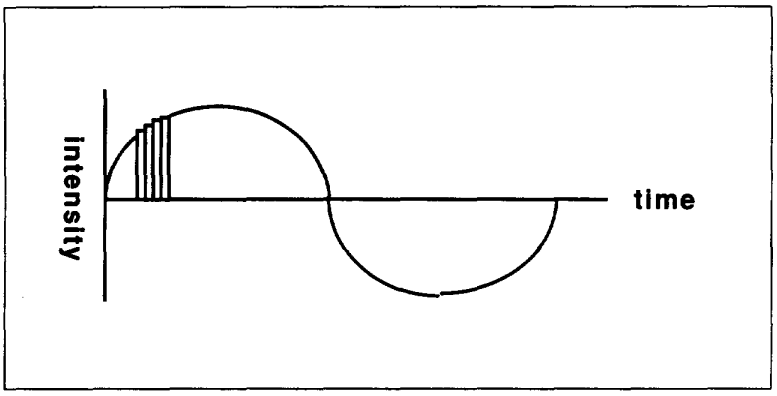


The interval between each sample of the sound wave must be very small to avoid distortion. The greater the number of samples, the more realistic the sound.

**Digitizing Moving Images**
The moving images of video and film are created by displaying a new image or ***frame*** every 1/30 second (video) or 1/24 second (film). In order to digitize video or film, each frame is digitized as a still picture.

Playing back video/film requires redrawing a new frame every 1/30 second while playing the accompanying audio.

**The Common Digital Network Infrastructure**
When text, graphics, sound, and moving images are converted to a common form of digital information (0s and 1s), they can be transported across the same digital network infrastructure as a series of bits.

***Bandwidth*** is a term used to indicate how much information can be transported across a digital network. The more bits that can be sent across the digital network per second, the greater the bandwidth.

The greater the bandwidth, the faster (i.e. in the shorter time) text and images can be transported across a digital network. If there is not sufficient bandwidth, sound and moving images will be interrupted or distorted.

**Networking**
Information is sent between computers in **packets** of 1,000 bytes of information. If there are more than 1,000 bytes of information, the information is broken up into multiple packets.

A **hub** has **ports** that connect individual computers to a common **Local Area Network (LAN)**.

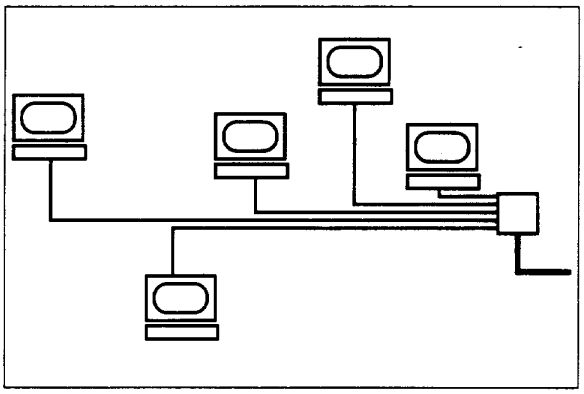

Each computer on the network is given a unique **node address**, usually between 1 and 254, that identifies the computer on the Local Area Network (LAN).

Each Local Area Network (LAN) has a unique world-wide **network address**. A network address is three numbers separated by a period (123.456.78).

The **IP Address** for a computer is the combination of the **network address** and the **node address**: 123.456.78.9. The **IP Address** is used to indicate the destination of each packet of information sent on the digital network.

A **Router** or **Switch** is used on each Local Area Network to send each packet to the appropriate computer. The router or switch is also used to connect Local Area Networks together.

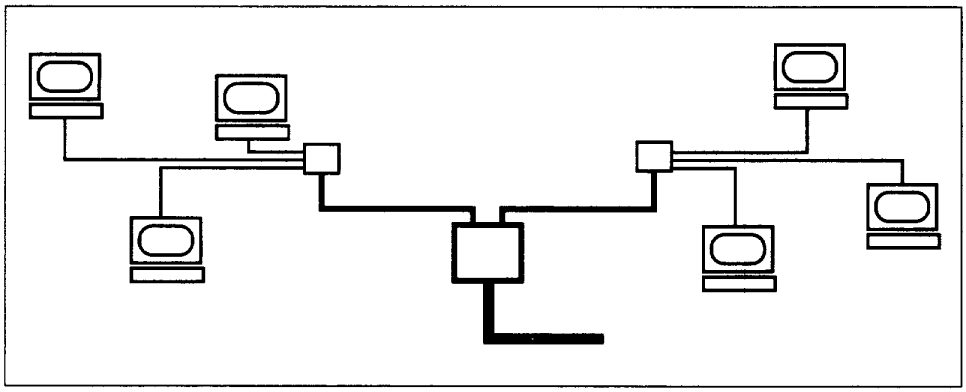

A **Backbone Network** is used to connect multiple Local Area Networks together, not individual computers. The backbone network has its own unique **network address**.

The backbone network typically provides the greatest bandwidth to locations with the greatest network demand. These locations can serve local computers, as well as other locations that have lower bandwidth requirements.

The following diagram shows a hypothetical community network. High bandwidth rings connect high demand locations. High demand locations connect lower demand locations.

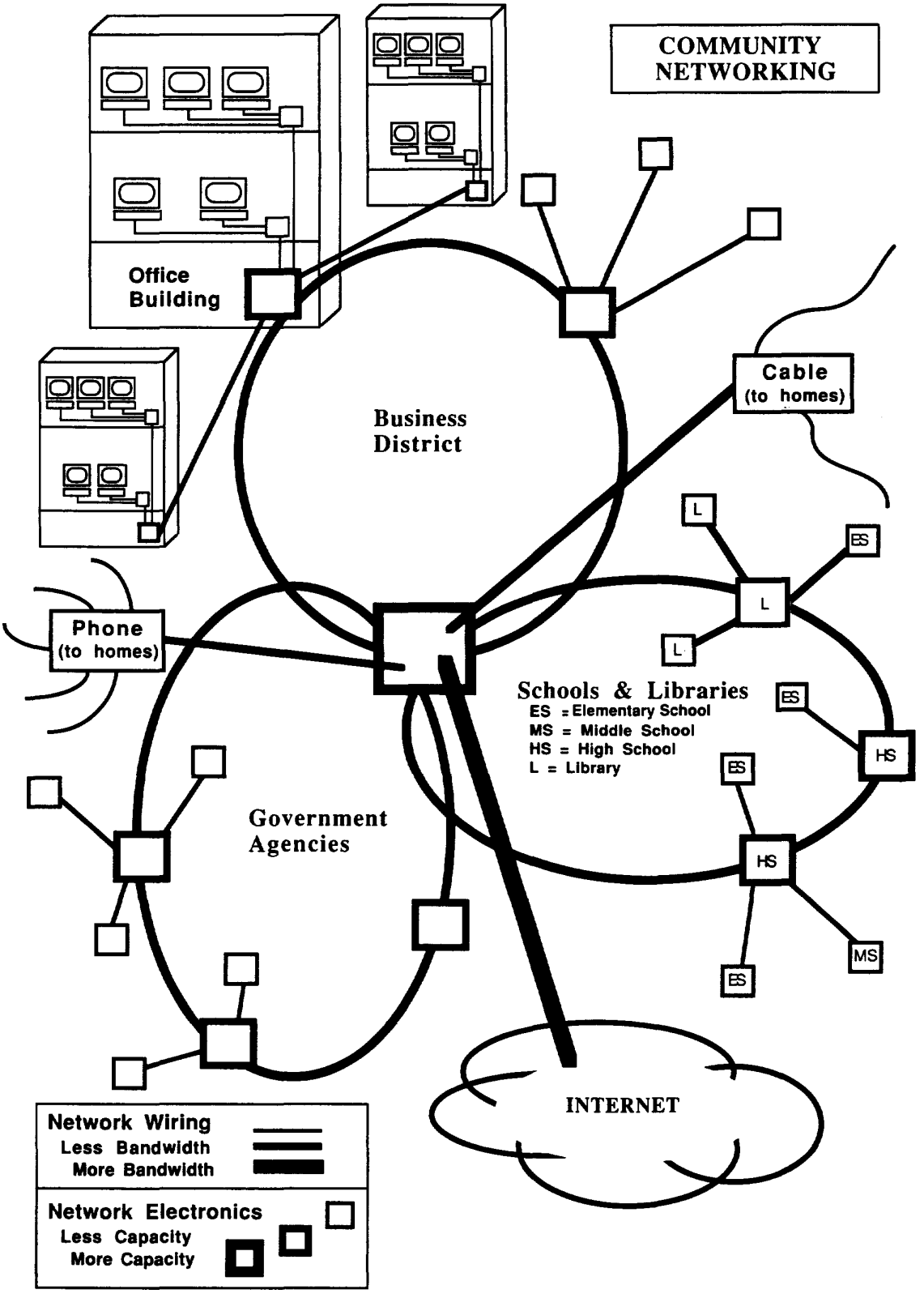
COMMUNITY NETWORKING
Office Building
Business District
Cable (to homes)
Phone (to homes)
Schools & Libraries
ES = Elementary School
MS = Middle School
HS = High School
L = Library
Government Agencies
INTERNET
Network Wiring
Less Bandwidth
More Bandwidth
Network Electronics
Less Capacity
More Capacity