Frame Relay and Data UNEs

e.spire Communications, Inc.
Intermedia Communications Inc.

Ex Parte Position Paper

CC Docket No. 96-98

Charles Kallenbach
Vice President, Regulatory – e.spire Communications, Inc.

Heather Burnett Gold
Vice President, Regulatory and External Affairs – Intermedia Communications Inc.

Julia Strow
Assistant Vice President, Regulatory – Intermedia Communications Inc.

Jonathan Canis, John Heitmann
Kelley Drye & Warren LLP

August 9, 1999

Table of Contents

Introduction 1

I. Technical Overview 3

A. Physical Components of Frame Relay Service 4

Diagram A – Frame Relay Frame 5

Diagram B – Getting to the First Frame Relay Switch 7

B. Getting from Point A to Point B – and How Fast 8

Diagram C – Frame Relay – Physical Components 9

Diagram D – Frame Relay – PVCs and ILEC Tariff Elements 11

C. Frame Relay in Terms of the OSI Protocol Stack 12

II. Why Current Arrangements with ILECs Are Stalling Competition and Limiting Consumer Choice in Data Service Providers 12

Diagram E – Frame Relay on the OSI Protocol Stack 13

Diagram F – Connecting Frame Relay Networks to Expand the Reach of ILEC and CLEC Networks 14

Diagram G – Frame Relay Interconnection 15

Diagram H – How to get a frame relay customer onto a CLEC's frame relay network 17

Diagram I – Different delivery options lead to different pricing scenarios 18

III. Specific Frame Relay UNEs 22

IV. Data UNEs Satisfy the "Impair" Standard of Section 251(d)(2) 26

Conclusion 29

Frame Relay and Data UNEs

CC Docket No. 96-98
July 21, 1999

e.spire Communications, Inc.
Intermedia Communications Inc.

In response to June 22, 1999 *ex parte* meetings between e.spire Communications, Inc. ("e.spire"), Intermedia Communications Inc. ("Intermedia"), and the Association for Local Telecommunications ("ALTS") with the Common Carrier Bureau staff, e.spire and Intermedia have prepared this position paper to explain and document their request for unbundled network elements ("UNEs") necessary to provide competitive frame relay and other types of data services, including voice over data, Internet protocol ("IP") and asynchronous transfer mode ("ATM") services.

Introduction

The market for intrastate and interstate data services is exploding as business and residential consumers gain access to and find additional uses and applications for "new" or "advanced" data services. The incumbent local exchange carriers ("ILECs") argue that, like their competitors, they also are "new entrants" into this market and have no competitive advantage or monopoly power in the market for data services. As demonstrated by the vast record in this docket and that in the *Advanced Services* docket, this argument belies reality. The ILECs' ubiquitous loop and transport network, enormous embedded customer base, and resulting economies of scale give them distinct and decisive advantages in the provisioning of advanced services in all intrastate market segments.

e.spire and Intermedia's need for frame relay interconnection and unbundled network elements ("UNEs") is generated by the companies' substantial investments in and deployment of frame relay networks. With access to their own or their partners' frame relay switches in most LATAs, both e.spire and Intermedia have deployed frame relay networks that provide national reach.[1] Nevertheless, within individual ILEC service territories, the ILECs' ubiquitous customer access and economies of scale have enabled them to deploy more frame relay switches closer to frame relay customers. In addition, ILECs already use their ubiquitously deployed loop and transport facilities to provide frame relay service to an enormous embedded customer base. These advantages of incumbency translate into a competitive cost disadvantage to e.spire, Intermedia and other competitive local exchange carriers ("CLECs") seeking to provide alternative intrastate frame relay services to end users.

---

[1] To date, e.spire has deployed 66 data switches nationwide and Intermedia has deployed 175 data switches.

Section 251 of the Act, however, is designed to level these advantages by providing cost-based interconnection and access to UNEs. The Commission already has acknowledged that the Act is technology neutral, and that, under Section 706, it is obligated to take steps necessary to encourage the deployment of advanced telecommunications capability. As described in e.spire and Intermedia's joint comments and in the comments of ALTS and the Competitive Telecommunications Association, the two major trade associations representing CLEC interests, the Commission should not delay in taking action necessary to spur competition in the market for frame relay and other data services. Thus, e.spire and Intermedia detail below their proposal for defining UNEs to facilitate competition in the market for packet-switched data services, such as frame relay. Below, e.spire and Intermedia set out a technical overview of the components of frame relay service, describe why current arrangements with ILECs inhibit additional competition and consumer choice, and demonstrate how their proposed frame relay UNEs meet the statutory unbundling standards of Section 251(d)(2).

To be sure, e.spire and Intermedia seek access to advanced services UNEs that go beyond frame relay. The frame relay UNEs described herein closely track frame relay elements currently available in ILEC access tariffs, and are offered in response to requests for specificity and indications that it may be difficult for the Commission to apply the unbundling standards of Section 251(d)(2) to broad functionality defined UNEs. Thus, e.spire and Intermedia offer frame relay UNEs as an example of the types of UNEs that will be necessary to move implementation of the competitive provisions of the 1996 Act beyond the circuit-switched world and into the packet-switched world.[2]

e.spire and Intermedia also have received conflicting indications during their early *ex parte* contacts in which it has been suggested that the Commission should be looking to adopt technology-neutral UNE definitions that will apply to various technologies and applications and allow for network evolution. Indeed, e.spire and Intermedia recognize that the Commission's previous finding that the Act is technology neutral may favor adoption of more functional UNEs from the ILECs packet-switched networks. e.spire and Intermedia are not opposed to such an approach provided that broader functionality-based UNEs are accompanied by explanatory language designed to preclude litigation and arbitration over what is included and what is not.[3]

Nevertheless, it is important to understand that packet-switched networks, including frame relay networks, are not entirely analogous to circuit-switched voice

---

[2] Frame relay and other packet-switched technologies pre-date the 1996 Act and have been widely deployed by ILECs for years. For example, despite only having a regional presence, U S West has the third largest frame relay network in the nation.

[3] The need for such specificity is demonstrated by the fact that, although the Commission was eminently clear in its *Section 706/Advanced Services Order* (*Deployment of Wireline Services Offering Advanced Telecommunications Capability*, Memorandum Opinion and Order, and Notice of Proposed Rulemaking, 13 FCC Rcd 24012) that Section 251(c) applies to packet-switched networks, as well as circuit-switched networks, e.spire was forced to arbitrate for Section 251(c) interconnection to U S West's packet-switched frame relay network in three states (and may need to arbitrate in more).

networks. Thus, packet-switched UNEs may differ somewhat from those in the circuit-switched world. From the examples and discussion provided below it is clear, however, that, regardless of packet-switched technology, loop and transport UNEs are necessary. Yet, because of the unique routing and switching functionalities incorporated into packetized transport, switching cannot be separated in the same manner possible in the circuit-switched world. Although the physical loop and transport facilities are the same as those used for circuit-switched transport, it is impossible to capture the efficiencies of packet-switched transport without incorporating intermediary switches used or useful in delivering traffic to a CLEC's packet switch. Accordingly, e.spire and Intermedia suggest that an attempt to define broad functional packet-switched UNEs should build upon the framework for frame relay UNEs set forth below.

I. Technical Overview

Frame relay is a very efficient and reliable means of transporting high-speed, high volume, bursty data between geographically dispersed local area networks ("LANs"). Ideal for LAN-to-LAN internetworking, frame relay offers a cost-and performance-effective alternative to traditional meshed private line networks. Newton's Telecom Dictionary provides an excellent definition of frame relay, which is relied upon heavily here.[4] In that definition, Newton's notes that frame relay actually is an access standard defined by the ITU-T in the I.122 recommendation "Framework for Providing Additional Packet Mode Bearer Services." Frame relay operates on Frame Relay Protocol, UNI Implementation Agreement FRF1.1, which is the standard protocol approved by the Frame Relay Forum.[5]

As provided by e.spire, Intermedia and other frame relay service providers, *frame relay service* employs

> a form of packet switching analogous to a streamlined version of X.25 networks. The packets are in the form of "frames," which are variable in length, with the payload being anywhere between 0 and 4,096 octets.[6]

Unlike some other transmission media, such as IP, frame relay today offers the distinct advantage of being able to accommodate efficiently and reliably data packets of various sizes associated with almost any data protocol. For example, an X.25 packet of 128 or 256 bytes or an Ethernet frame of 1,500 bytes can be switched and transported over a frame relay network. This is possible because the specific data protocol associated with the payload is undisturbed (*i.e.,* no protocol conversion is required) in the process of encapsulating native Protocol Data Units ("PDUs") in frame relay frames. As depicted in

---

4 Newton's Telecom Dictionary, at 337-381, 5th Ed. (1999).

5 <www.frforum.com> This website is a valuable resource for information about frame relay standards, technology, and services.

6 Newton's Telecom Dictionary, at 337.

Diagram A (*Frame Relay Frame*), frame relay frames incorporate header and trailer information specific to the frame relay network and distinct from the data payload being transported. In a sense, frames are like programmable (address and congestion instructions must be set) and extendable (frame size is dictated by data payload size) data boxcars capable of carrying varying types and amounts of information on a very fast track. Thus, frame relay achieves substantial switching efficiencies (in terms of speed and cost) because it requires neither segmentation into standard-sized packets nor protocol conversions.

Additional frame relay efficiencies are achieved by the fact that transport and switching errors are detected and corrected by customer premise equipment ("CPE") and not by the frame relay network switches. Although frame switches and transmission media are fully digital and offer superb performance, moving the error detection and correction functions to the perimeter allows for faster and less expensive frame relay switching.

A. Physical Components of Frame Relay Service

Frame Relay Access Device ("FRAD"). In addition to the network components that are described below, frame relay service requires deployment of a customer premise equipment (at both the originating and terminating end) known as a FRAD. Sometimes referred to as a frame relay assembler or disassembler, the FRAD is a type of router deployed on the customer side of a network connection. The FRAD is used to accept traffic from all computers on a LAN or Ethernet. Then, the FRAD packages data in frames and forwards them onto the frame relay network. On the terminating end of a data transmission, the FRAD unpackages data from the frames and delivers it to the LAN or Ethernet.

FRADs can be provided by either the customer or the carrier. Cisco and Bay Networks (NorTel) are perhaps the most prominent FRAD vendors. Installation-ready and with software, FRADs typically cost in the neighborhood of $3,000. Installation and LAN-to-network connection costs can be substantial, depending on the specific circumstances involved.

Frame Relay Access Link ("FRAL"). The FRAD-to-network connection employed in frame relay service is simply a digital 2- or 4-wire local loop commonly referred to as a FRAL. Loops used in provisioning frame relay service include DS-0s, NxDS-0s, T-1s, and T-3s. DS-0 loops are deployed in increments of 56/64 kbps. A T-1 is the equivalent of 24 64 kbps DS-0 channels. HDSL can be used, in some cases, as a T-1 replacement.[7] A T-3 is the equivalent of 28 T-1s. DS-0 multiples can be achieved by

[7] Depending on loop length, HDSL can be used to generate a 1.544 Mbps signal. Today, that signal cannot be channelized into a fractional T-1. However, Lucent and several smaller equipment manufacturers are attempting to develop a product that will be capable of channelizing an HDSL "T-1."

Frame Relay Frame

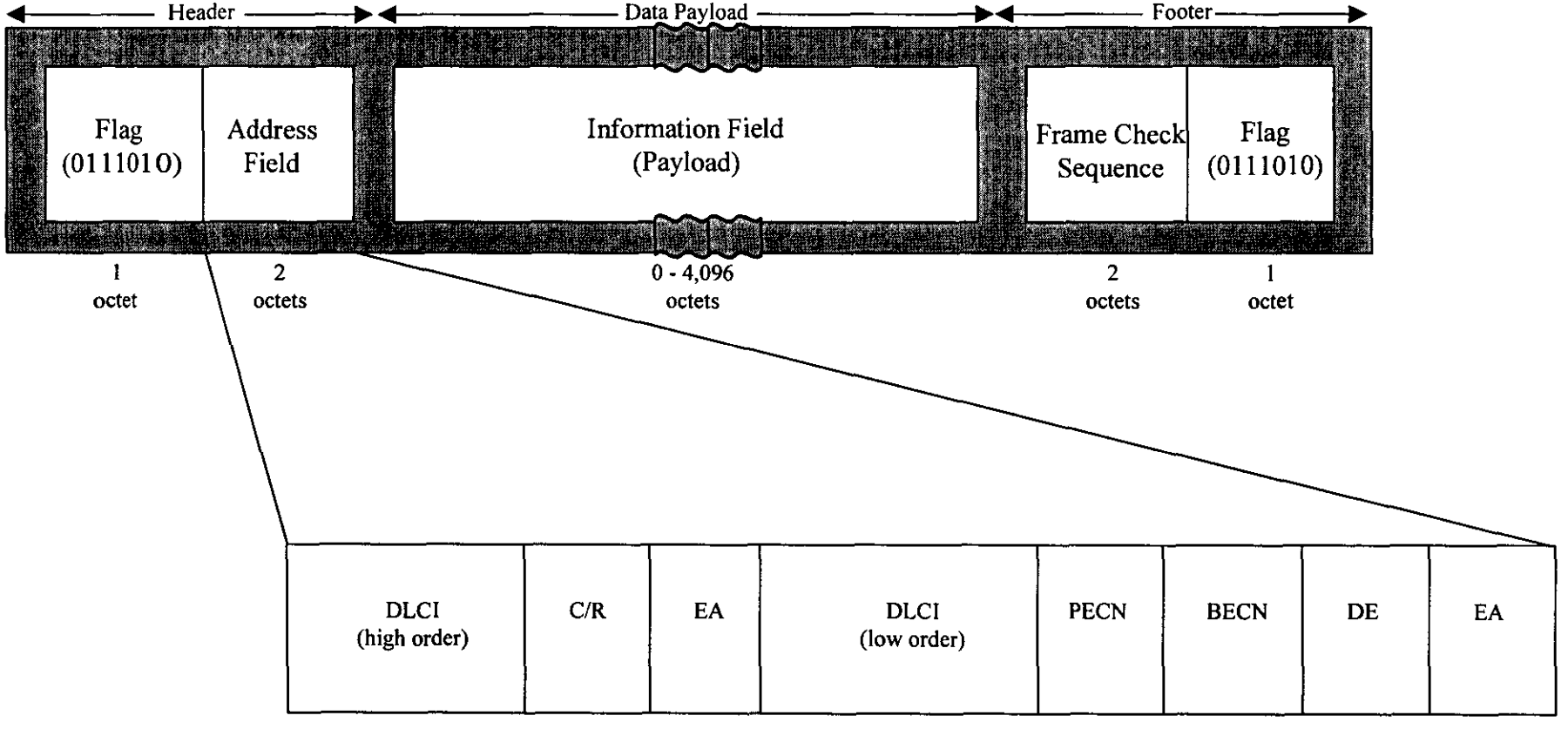

Octet = an 8 bit byte

DLCI	Data link connection identifier
C/R	Command/response field
FECN	Forward explicit congestion notification
BECN	Backward explicit congestion notification
DE	Discard eligibility
EA	Address field extension

Adapted from Newton's Telecom Dictionary

Diagram A

bonding several loops together to form a "fractional T-1." The economic cross-over point at which, from a cost-perspective, it makes sense to switch from multiple DS-0s to a full T-1 circuit is roughly at 512 kbps or 7 DS-0 loops.

Digital DS-0 and T-1 loops either can be self-provisioned or obtained as UNEs. Costs of self-provisioning and UNEs varies widely. ILEC UNE provisioning has been too unpredictable and undependable to rely on in most instances. Needing to satisfy the immediate demands of sophisticated frame relay end users, e.spire, Intermedia and other CLECs providing frame relay service typically rely on ILEC special access facilities to connect FRADs to their frame relay networks.

Digital Access and Cross-Connect System ("DACS"). Frame relay switches are configured to accept channelized or unchannelized T-1 interfaces. Thus, multiplexing equipment known as a DACS is needed to aggregate dedicated DS-0 traffic onto a common T-1 headed for the frame relay switch. Indicating the conversion performed, this type of DACS is called a "1-0 DACS." Frame relay traffic which originates on a T-1 typically runs directly to a frame relay switch. Some frame relay switches operate at T-3 speeds and, thus, require a "3-1 DACS." Notably, unlike most of the digital subscriber line access multiplexers ("DSLAMs") deployed in today's networks, DACS are easily partitioned, as they are capable of supporting multiple T-1s. (DSLAMs in use today typically can only aggregate multiple loops onto a single T-3 circuit.)

Lucent and Alcatel are among the many equipment vendors offering DACS equipment. Ready to install, DACSs start at $60-70,000. Installation and, if required, collocation costs would be in addition to that figure.

Frame Relay Switching. Typically deployed adjacent to DACS equipment, a user to network interface ("UNI") port on a frame relay switch marks the point of entry or "ingress" into the frame relay switching and transport network. The physical components employed in getting to the point of ingress are depicted **Diagram B** (*Getting to the First Frame Relay Switch*). For maximum efficiency and redundancy, multiple frame relay switches are interconnected in a grid-like manner using DS-3 and higher transport connected to trunk interfaces on frame relay switches.

Ascend (Lucent), Cisco and Newbridge are among the equipment manufacturers offering frame relay switches. Ready for installation, frame relay switches cost a minimum of $250,000. Again, installation and, if required, collocation costs would be in addition to that figure.

Transport. As indicated above, frame relay traffic is transported between switches on DS-3 and OCn transport links. Such transport links may be self-provisioned or obtained from other telecommunications carriers. IntraLATA transport links may be obtained from ILECs as dedicated transport UNEs. Again, due to unpredictable and unreliable ILEC provisioning of UNEs, these circuits typically are ordered and provisioned as much more expensive special access circuits. InterLATA transport links may be available from interexchange carriers and wholesale carriers' carriers.

Getting to the First Frame Relay Switch

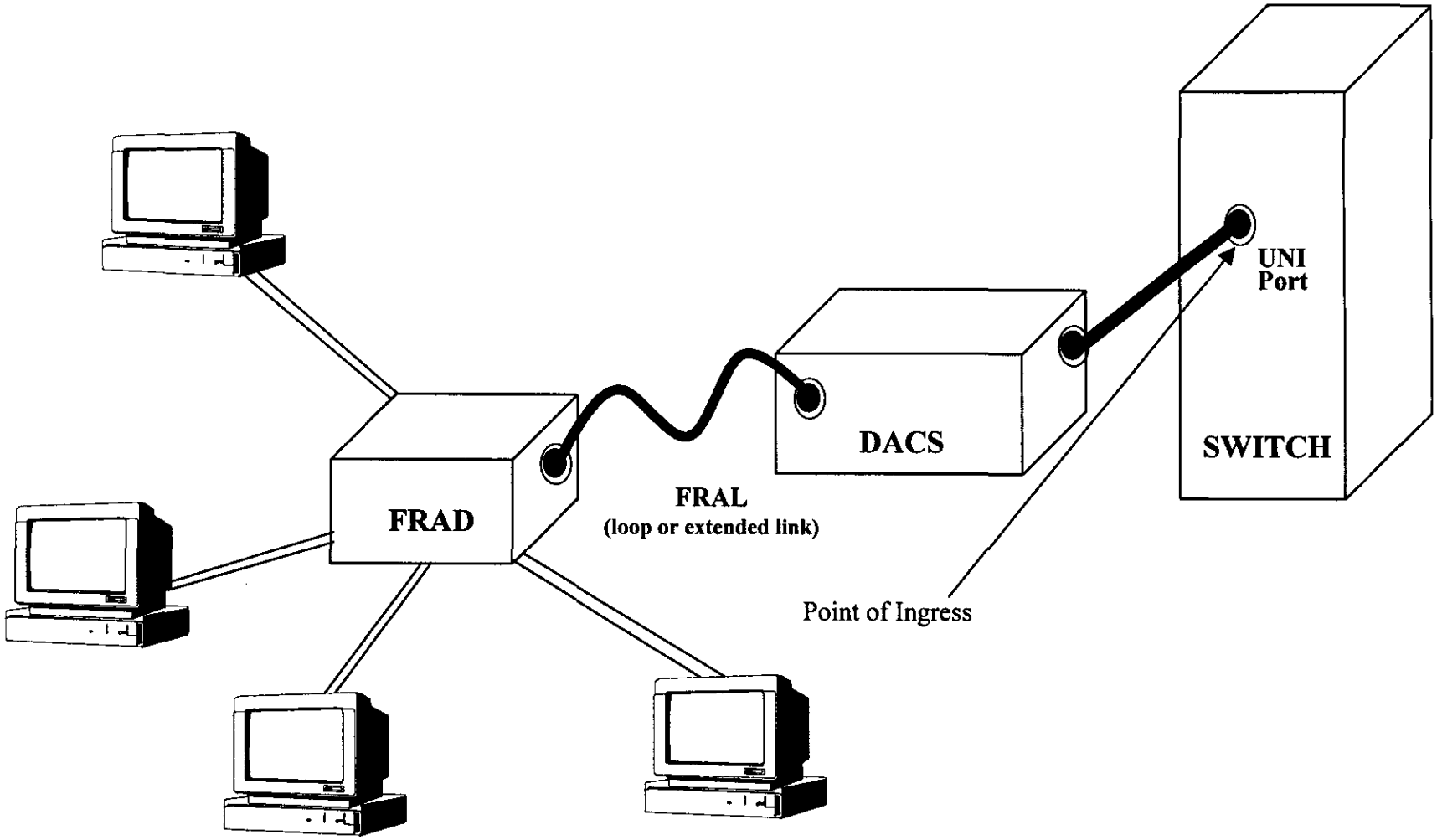

Diagram B

The physical components used in providing frame relay service are depicted in **Diagram C** (*Frame Relay – Physical Components*).

B. Getting from Point A to Point B – and How Fast

Like other types of fast packet-switched technologies, frame relay employs a shared network. Frame relay switches accept frames and forward them individually, as transport link capacity permits. Transport links between frame relay switches need not facilitate an exclusive connection, as is required in the voice world, but, instead, may carry multiple transmissions simultaneously.

However, frame relay differs from other packet-switched services in that frames must travel in a predetermined path. Even though the path between the ingress switch and the egress switch will, in many cases, not be direct and can involve multiple "hops" between switches, frame relay traffic does not hop unpredictably across a "cloud" in the way that typically is associated with packet-switched transport. Thus, when depicted in diagrams, a frame relay cloud merely signifies that there typically are multiple switches interconnected in a frame relay network and that a frame relay transmission may hop between all or some of the switches. The key point, however, is that, with frame relay, network engineers make predictive assessments about capacity and dictate each of the switch-to-switch hops frame relay traffic will take on the way to its final destination. This aspect of frame relay allows the switching function involved to be simpler and less expensive.

The predetermined path over which frames travel to connect one frame relay user with another (or to connect a customer's multiple LANs) is known as a permanent virtual circuit ("PVC").[8] As indicated above, the path between origination and termination may not be direct, but it is always the same. Only in cases of network failure will traffic switch from its predetermined course or PVC. Even then, a pre-set default PVC is used. Thus, frame relay employs a "connection-oriented" network, while IP and other packet-switched networks generally are considered "connectionless."

The series of connections between pieces of frame relay equipment (FRADs, DACSs and switches) which constitute PVCs are established by stringing together a set of data link connection identifiers ("DLCIs"). DLCIs direct traffic from the FRAD to the point of ingress to the next designated switch on the network, and to the next, and eventually, to a terminating switch (point of egress) and FRAD. A unique DLCI is established for each link or "hop" between the originating FRAD, intermediate switches,

[8] Because connections between frame relay senders and recipients must be pre-set by the service provider, the connection is characterized as one that is "always on."

The physical components used in providing frame relay service are depicted in **Diagram C** (*Frame Relay – Physical Components*).

B. Getting from Point A to Point B – and How Fast

Like other types of fast packet-switched technologies, frame relay employs a shared network. Frame relay switches accept frames and forward them individually, as transport link capacity permits. Transport links between frame relay switches need not facilitate an exclusive connection, as is required in the voice world, but, instead, may carry multiple transmissions simultaneously.

However, frame relay differs from other packet-switched services in that frames must travel in a predetermined path. Even though the path between the ingress switch and the egress switch will, in many cases, not be direct and can involve multiple "hops" between switches, frame relay traffic does not hop unpredictably across a "cloud" in the way that typically is associated with packet-switched transport. Thus, when depicted in diagrams, a frame relay cloud merely signifies that there typically are multiple switches interconnected in a frame relay network and that a frame relay transmission may hop between all or some of the switches. The key point, however, is that, with frame relay, network engineers make predictive assessments about capacity and dictate each of the switch-to-switch hops frame relay traffic will take on the way to its final destination. This aspect of frame relay allows the switching function involved to be simpler and less expensive.

The predetermined path over which frames travel to connect one frame relay user with another (or to connect a customer's multiple LANs) is known as a permanent virtual circuit ("PVC").[8] As indicated above, the path between origination and termination may not be direct, but it is always the same. Only in cases of network failure will traffic switch from its predetermined course or PVC. Even then, a pre-set default PVC is used. Thus, frame relay employs a "connection-oriented" network, while IP and other packet-switched networks generally are considered "connectionless."

The series of connections between pieces of frame relay equipment (FRADs, DACSs and switches) which constitute PVCs are established by stringing together a set of data link connection identifiers ("DLCIs"). DLCIs direct traffic from the FRAD to the point of ingress to the next designated switch on the network, and to the next, and eventually, to a terminating switch (point of egress) and FRAD. A unique DLCI is established for each link or "hop" between the originating FRAD, intermediate switches,

---

[8] Because connections between frame relay senders and recipients must be pre-set by the service provider, the connection is characterized as one that is "always on."

Frame Relay - Physical Components

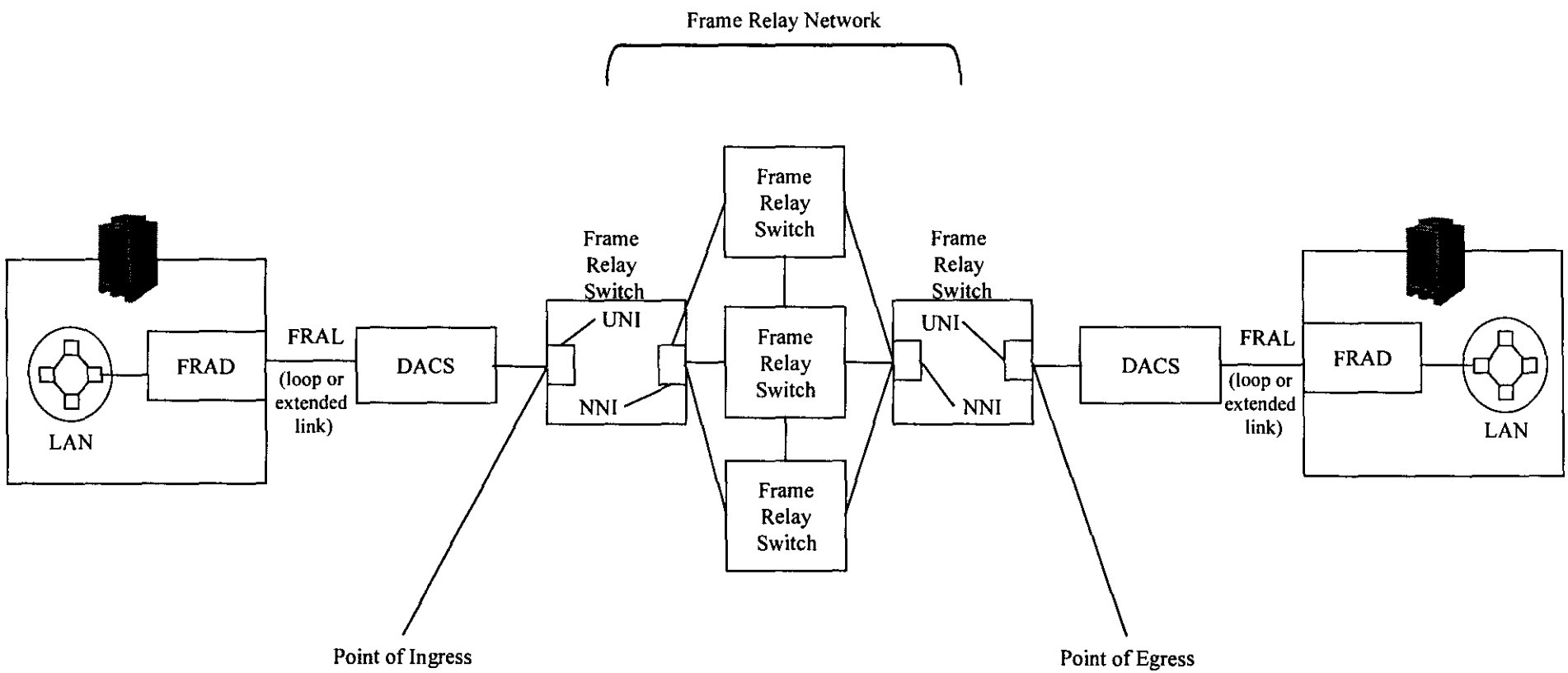

Diagram C

DC-86067.ppt

and terminating FRAD in a frame relay network.[9] PVCs are uni-directional.[10] Because most frame relay customers seek to send data to and from connected LANs, PVCs must be established in both directions. Establishing a PVC is a switch programming function which typically takes five to seven minutes.

Frames travel along DLCIs or hops in a PVC at varying speeds. e.spire, Intermedia and other frame relay carriers sell frame relay service based on a guaranteed transmission capacity or committed information rate ("CIR"). CIRs are provided at speeds of 0, 8, 16, 32, 56/64, and increments of 64 kbps up to 1556 kbps. Generally, the CIR will equal about half of the capacity of loop/port capacity ordered by the customer. For example, if a customer orders a 1.544 Mbps or T-1 loop, it may order a CIR of up to 768 kbps. With a 1.544 Mbps loop and port connection and a CIR of 768 kbps, frames can traverse the network at bursts of up to 1.544 Mbps. However, a software program operating in the frame relay switch performs real-time measurement of traffic being submitted from a FRAD. If frames are being submitted at speeds below the CIR, they are allowed to pass through the ingress switch and onto the next hop in the frame relay network. If frames are coming in at speeds at or above the CIR, the switch will "grab" the frame and reset the discard eligibility ("DE") field from 0 to 1. In cases of network congestion, frames with DE field settings at 1 will be dropped. Dropped frames are detected on the terminating end of the transmission and are resent within a fraction of a second by the originating end-user's computer. Where no network congestion is encountered, frames may pass through the network at speeds in excess of the CIR.

Because of the shared nature of the frame relay network and the ability to provide frame relay at various guaranteed speeds or CIRs, e.spire, Intermedia and other frame relay providers are able to extract cost efficiencies through the network engineering practice of "oversubscription." The shared nature of a frame relay network allows for the assignment of multiple DLCIs to the same transmission link. To achieve maximum use of frame relay switching capacity and transport links, DLCIs at varying CIRs generally are assigned to switch/transport links so that the aggregate CIR or capacity commitment is equal to twice ("two times") the capacity of the switch port and transport link.[11] Thus, DLCIs with individual CIRs totaling two times the capacity of a T-1 are assigned to a single T-1 link. The oversubscription factor may be adjusted if unacceptable peak-hour congestion is experienced.

PVCs and their component parts are depicted in **Diagram D** (*Frame Relay – PVCs and ILEC tariff elements*).

---

9 DLCIs consist of up to a 4 byte string of numbers.

10 Thus, unlike voice traffic, data traffic carried over frame relay is "one way."

11 Oversubscription factors can vary. Some carriers use an oversubscription factor of three, while others use oversubscription factors below two. *See, e.g.*, Ameritech Tariff FCC No. 2, original page 454.42, § 8.5.4(A) and (B) (establishing an oversubscription rate of 200%) (Appendix at Tab 4).

Frame Relay - PVCs and ILEC Tariff Elements

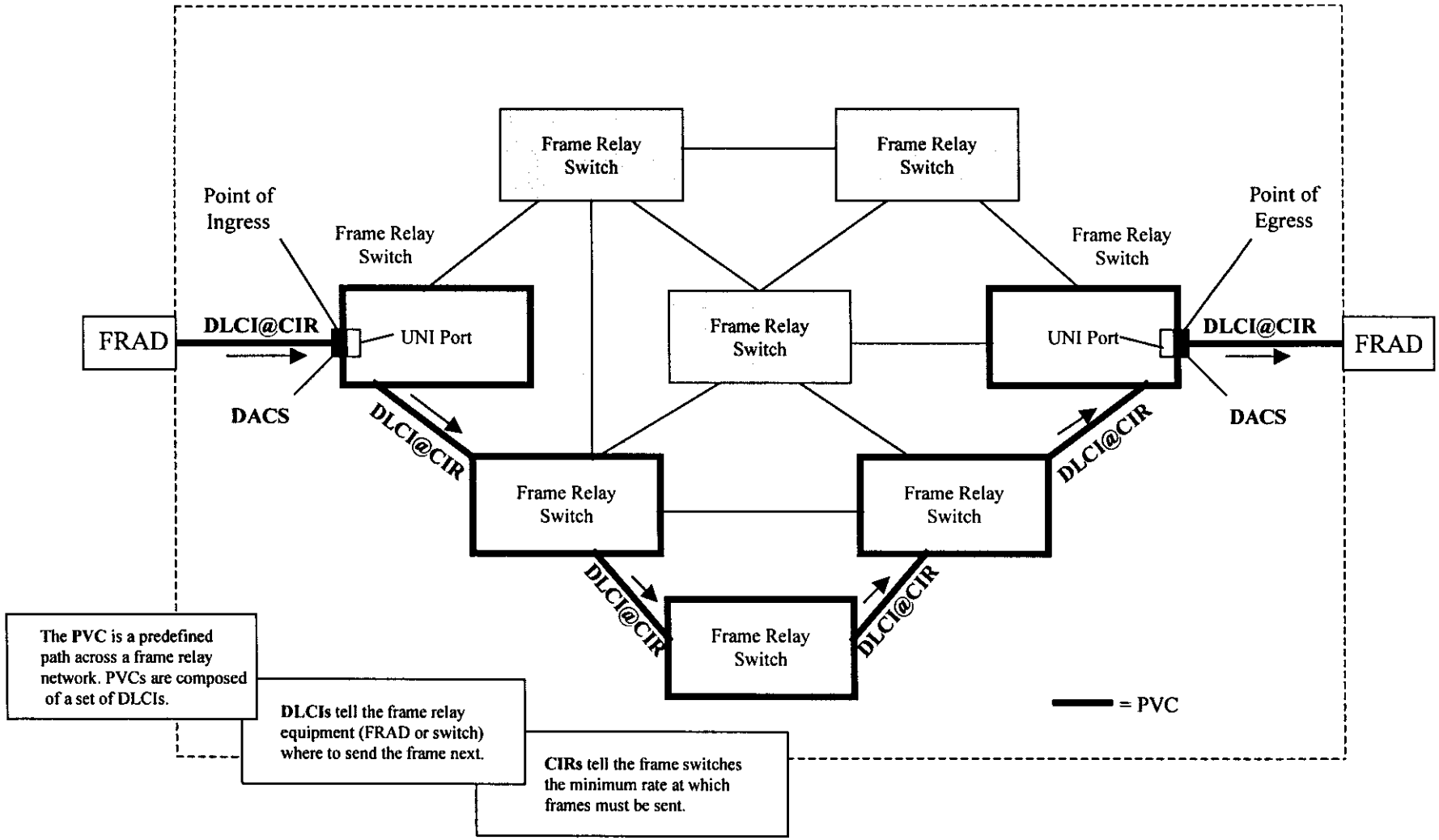

Diagram D

DC-86067.ppt

Frame Relay on the OSI Protocol Stack

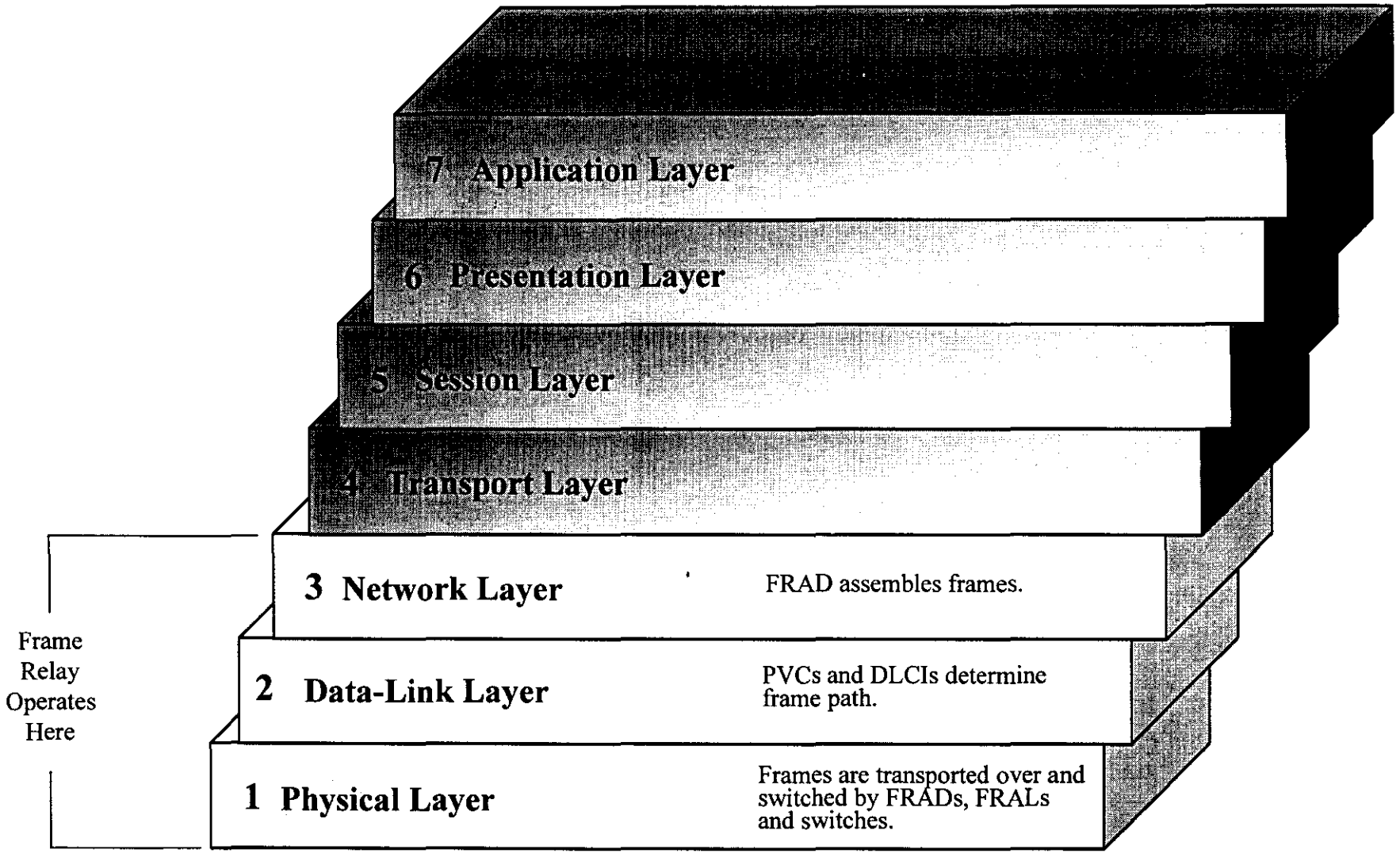

Diagram E

Connecting Frame Relay Networks to Expand the Reach of ILEC and CLEC Networks

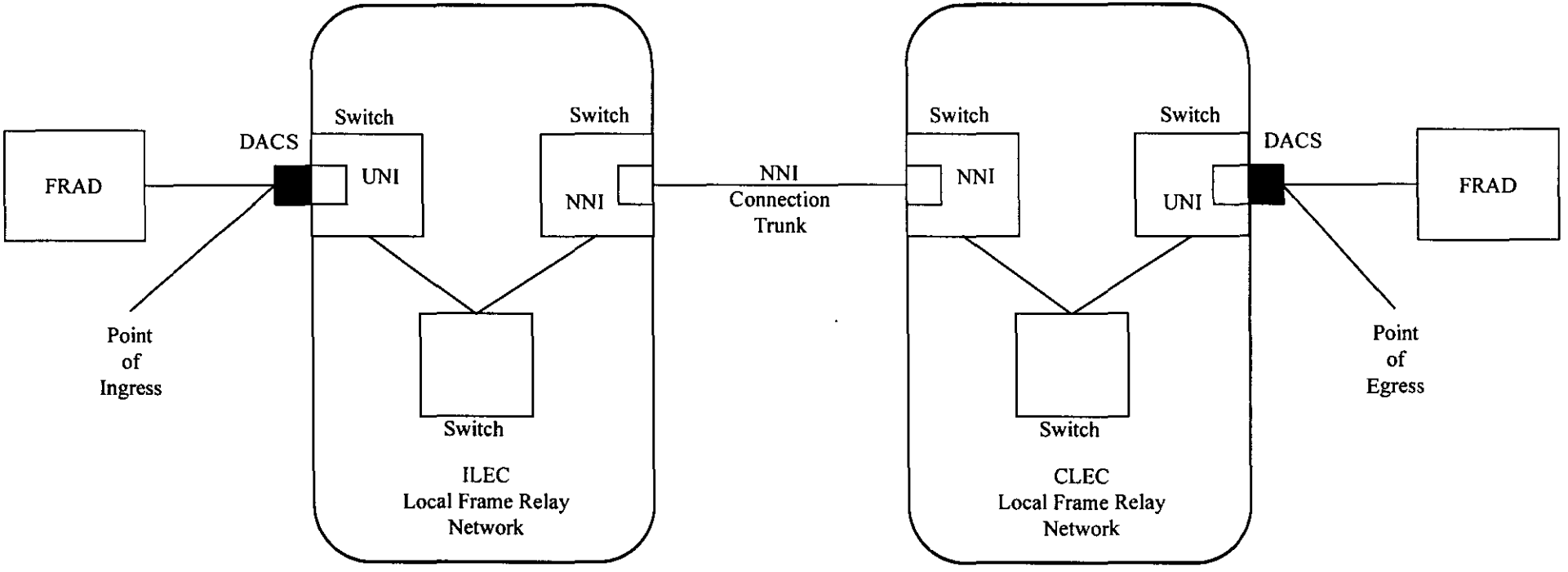

Diagram F

DC-86067.ppt

Frame Relay Interconnection

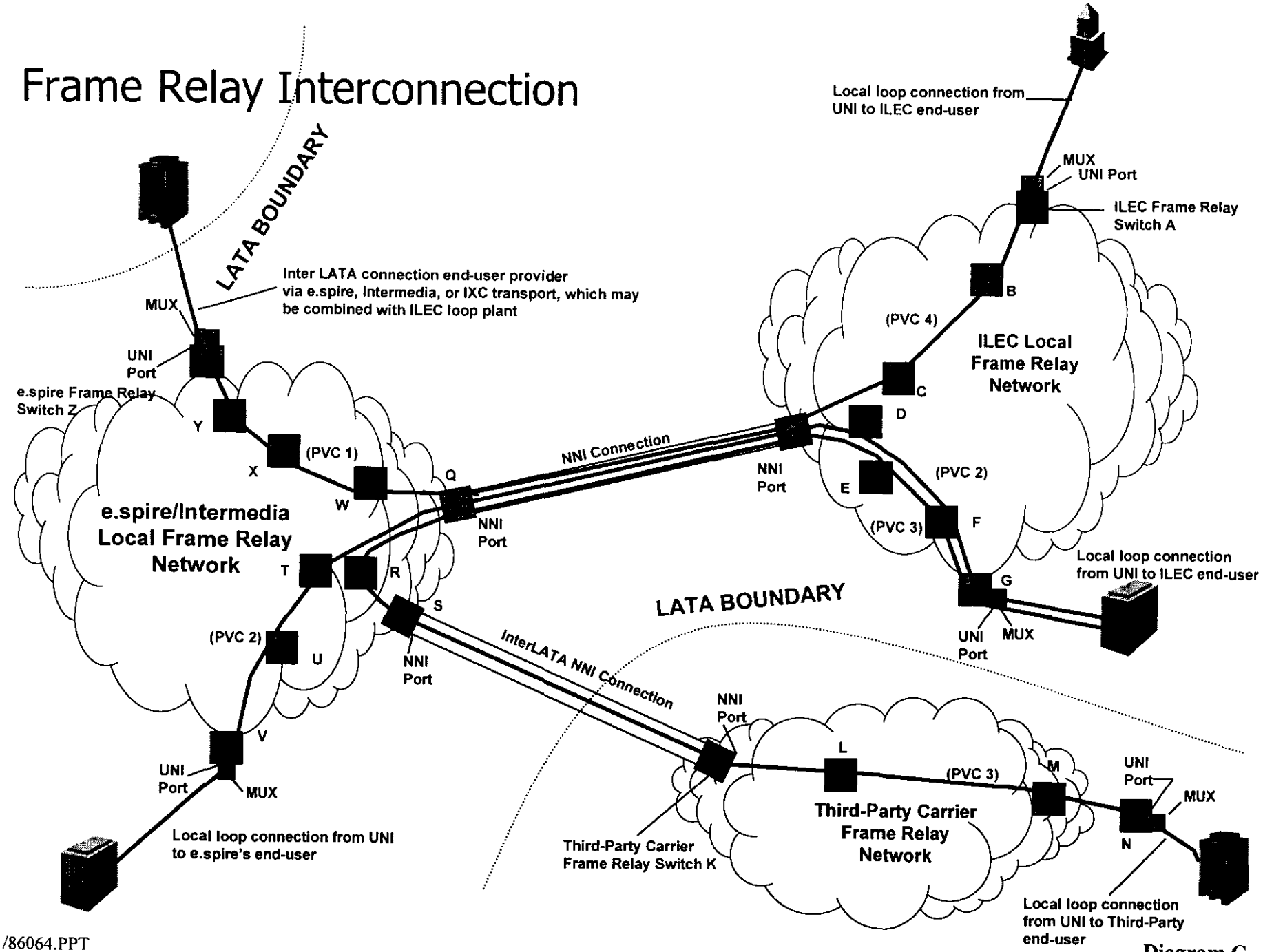

DC01/86064.PPT

Diagram G

Through unbundled access to frame relay network elements at TELRIC-based prices, e.spire and Intermedia can provide additional customers efficient access to e.spire and Intermedia's own frame relay networks by making an intermediate connection between the customer and frame relay network elements in an ILEC's network that are geographically closer to the end user. In cases where frame relay customers are geographically closer to an ILEC frame relay switch than they are to e.spire or Intermedia's frame relay switch, access to ILEC frame relay network elements provides a cost-effective alternative to traditional transmission UNEs, even when provided in a combination, such as the extended link, which eliminates an immediate need to collocate in a subtending ILEC end office. This scenario is depicted in **Diagram H** (*How to Get a Frame Relay Customer onto a CLEC's Frame Relay Network*) and in **Diagram I** (*Different Delivery Options Lead to Different Pricing Scenarios*).

For nearly three years, e.spire and Intermedia have negotiated and arbitrated with the ILECs on a state-by-state basis for cost-based interconnection and unbundled access to frame relay network elements. In general, the companies' individual efforts have been rebuffed and e.spire and Intermedia have been forced to order frame relay interconnection (in the form of various network elements) out of the ILECs' federal access tariffs – simply to interconnect and deliver frame relay traffic headed to an ILEC frame relay end user. Obviously, the ILECs' federal access tariffs do not offer a means of interconnection compliant with the Commission's TELRIC pricing standard for interconnection and UNEs. Indeed, the inflated federal access tariff rates e.spire and Intermedia are forced to pay are not the least bit conducive to expanding the reach of competitive broadband frame relay networks to more Americans, particularly the small businesses that have been so instrumental in driving and deepening the reach of the nation's current, unprecedented economic expansion.

In states where e.spire has been able to commit resources to arbitrate issues related to frame relay interconnection and unbundling,[13] the results have been muddled

[13] It should be noted that arbitration and complaint proceedings, even "rocket-docket" proceedings, are exceedingly expensive. Today's reality is that ILECs in large measure will not comply with statutory and regulatory obligations unless all avenues for litigation and obstruction have been exhausted. Only the ILECs have the capital and personnel necessary to wage a battle on every front. CLECs must pick and choose their battles carefully. With Wall Street's current emphasis on near term results and CLECs "going EBIDTA positive," these battles must be chosen more carefully than ever. Thus, with regard to arbitration and complaints, it is not enough that processes are available, if the availability of such processes enables ILECs to prolong the day they will be forced to comply with the Act and the Commission's rules. In short, arbitration and complaint processes must be accompanied by proactive enforcement, if local competition is to develop as Congress intended. ILECs should not be able to extract regulatory relief or benefits in exchange for promises of compliance or even partial compliance. Enforcement and compliance must come first – any other ordering of priorities delays competition and benefits entrenched monopolies at the expense of new entrants and consumers.

How to get a frame relay customer onto a CLEC's frame relay network

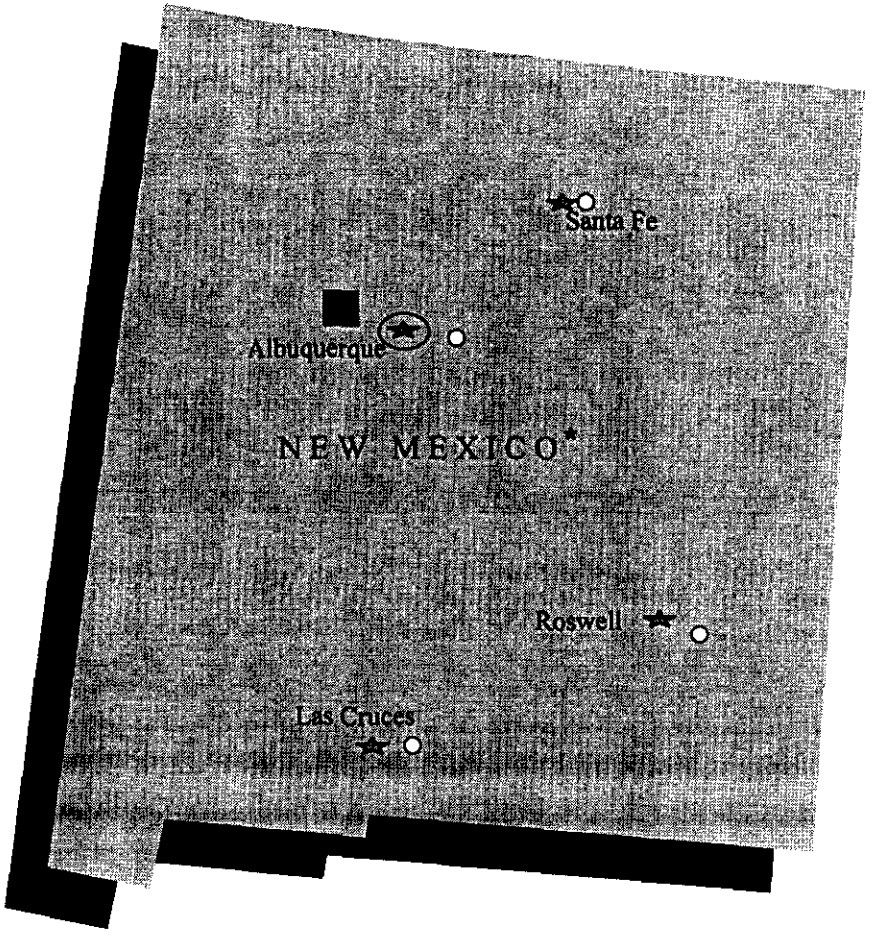

For the customer's headquarters location, the connection is simply made by bringing the customer "on-net" (self-provisioning a loop) or by leasing a local loop UNE.

For the customer's LANs in outlying locations, a CLEC, in this case, e.spire, should be able to choose between circuit-switched delivery or packet-switched delivery via ILEC UNEs. As demonstrated on the next diagram, each method presents several costing scenarios which factor directly into e.spire's ability to provide competitive frame relay services.

★	Frame relay customer LAN (⊛ Headquarters)
■	CLEC frame relay POP/switch
○	ILEC frame relay POP/switch
*	New Mexico is a single LATA state

Diagram H

Different delivery options lead to different pricing scenarios

Pricing

e.spire frame relay switch/POP Albuquerque

Customer LAN Las Cruces

May be efficient, if transport link is short. Prohibitively expensive in most cases where UNE combinations or extended link are not available. Even then, costs may not be comparable to the TELRIC of packet-switched transport.

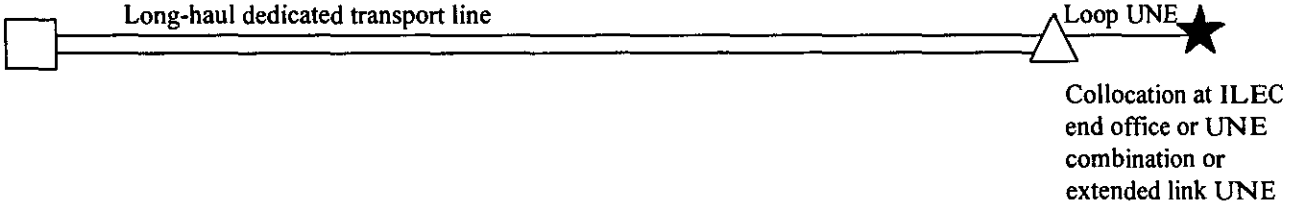

Tariffed rates are unrelated to cost - do not reflect efficiencies of frame relay networks. Resale costs roughly 30-40% more than UNEs.

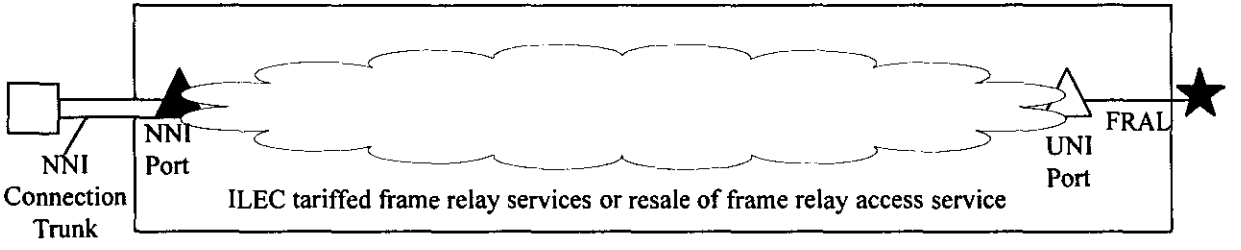

TELRIC pricing of ILEC rate elements reflects efficiencies of ILEC network.

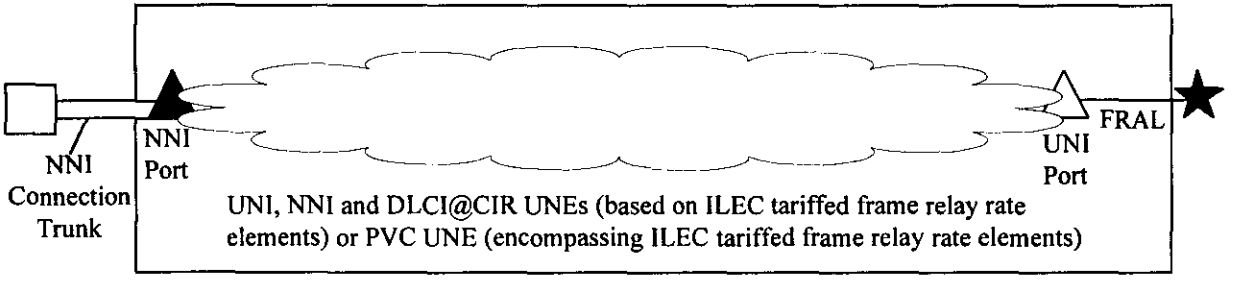

Diagram I

by confusion over jurisdiction.[14] With regard to UNEs in particular, state regulators have been confounded by the issue of whether e.spire (or any other CLEC) should be permitted to use UNEs to provide interLATA frame relay services to complement its intraLATA frame relay service and local and long distance voice offerings.[15] The result already has been an inconsistent patchwork of state decisions. In arbitration with U S West in three states, e.spire submits that only one state – Arizona – got it right. There, e.spire won the right to TELRIC-based UNEs and cost-based interconnection.[16] Appeals, legal maneuvering and the necessity of cost studies and subsequent regulatory proceedings, however, will delay the effect of this decision for some time. Still, the right decision is certainly better than no decision or the wrong decision.

In Colorado, e.spire won a similar decision in which the Colorado Public Utilities Commission ("PUC") found that e.spire was entitled to Section 251(c) interconnection at TELRIC-based prices with U S West's frame relay network.[17] However, the Colorado PUC eventually ruled that, for interLATA frame relay service, e.spire must order frame relay interconnection elements from U S West's federal access tariff.[18] It did so despite rejecting U S West's argument that e.spire was not entitled to Section 251(c)

---

[14] In these arbitrations, U S West rested its case largely on the fact that "it does not agree with the FCC's Section 251(c) Order regarding the obligation to interconnect," regardless of the fact that the FCC, in that order (the FCC's initial Section 706 *Advanced Services Order*), "concluded that advanced services, specifically including packet-switched networks of ILECs, are telecommunications services, subject to the interconnection obligations of § 251(c)(2)." *In re e.spire Communications Inc, et al. for Arbitration with U S West Communications Inc.*, Ariz. CC Decision No. 61527, at 5 (Feb. 19, 1999) (Appendix at Tab 1).

[15] There is no reason to believe that the difficulties that the states have had with regard to the issue of establishing interconnection rates, terms and conditions for interstate frame relay services has not extended or will not extend to all types of interstate data traffic. Consistent with the mandate of Section 706, the Commission should act promptly to eliminate the ILECs' ability to use misplaced jurisdictional arguments, based on fundamental misinterpretations of the FCC's decisions, to erect additional barriers to UNE/facilities-based competition in the market for advanced services.

[16] *In re e.spire Communications Inc, et al. for Arbitration with U S West Communications Inc.*, Ariz. CC Decision No. 61527, at 5-6, 13 (Feb. 19, 1999) (Appendix at Tab 1).

[17] *In re e.spire Communications Inc, et al. for Arbitration with U S West Communications Inc.*, Co. PUC Decision No. C-98-1057, at 10 (Initial PUC Decision) (Oct. 29, 1998) (*"Colorado PUC Initial Decision"*) (Appendix at Tab 2).

[18] *In re e.spire Communications Inc, et al. for Arbitration with U S West Communications Inc.*, Co. PUC Decision No. C-99-534, at 4 (Ruling on Applications for Approval of Proposed Amendment to Interconnection Agreement) (May 12, 1999) (*"Colorado PUC Ruling on Proposed Amendment to Interconnection Agreement"*) (Appendix at Tab 2). Nevertheless, the Colorado PUC previously rejected U S West's argument that e.spire was not entitled to Section 251(c) interconnection for "interexchange" frame relay service and concluded that, for trunks connecting e.spire's frame relay network with that of U S West, e.spire would have to pay 100% of the UNE rate for DS-1 and DS-3 transport. *Colorado PUC Initial Decision*, at 12-13 (unlike the Arizona and New Mexico commissions, the Colorado PUC requires separate trunking for intraLATA and interLATA frame relay traffic. e.spire is forced to absorb all of the costs associated with this requirement intended to ensure that U S West does not violate its interLATA service prohibition).

interconnection for "interexchange" frame relay service[19] and despite requiring U S West to provide trunks for interLATA frame relay traffic at TELRIC-based UNE rates.[20]

The Colorado PUC attempted to justify its decision to require e.spire to purchase frame relay service components from U S West's federal access tariff based on the fact that e.spire intended to use frame relay interconnection with U S West, *in part*, to provide exchange access for its own interLATA frame relay services.[21] This fact, however, does not compel or even suggest the conclusion reached by the Colorado PUC. Indeed, in its *Local Competition First Report and Order,* the FCC determined that:

> (1) requesting carriers are entitled to Section 251(c) interconnection, provided that such interconnection is not used exclusively for interexchange services; and
>
> (2) requesting carriers may use UNEs to provide exchange access to themselves and others.

As the Colorado PUC itself appeared to recognize, e.spire's frame relay service offerings are both intrastate and interstate in nature.[22] Thus, because e.spire does not seek interconnection or access to unbundled network elements exclusively for the provision of interexchange or interLATA frame relay services, e.spire is entitled to Section 251(c) interconnection and may use UNEs to provide exchange and exchange access services to itself and others. Due to the Colorado PUC's misreading of the FCC's *Local Competition First Report and Order* holdings, e.spire and Intermedia respectfully request that the FCC reiterate and affirm those findings and explicitly find that they apply to packet-switched (including frame relay) or circuit-switched interconnection and UNEs.

On a different but no less misguided basis, the New Mexico Corporation Commission ("CC") (now the New Mexico Public Regulation Commission) reached the same result as the Colorado PUC. Although New Mexico CC found that e.spire was entitled to cost-based interconnection and unbundled access under Sections 251(c)(2) and (3), the New Mexico CC concluded (wrongly) that "[t]his Commission has no jurisdictional authority to rule on matters concerning compensation and pricing of interLATA traffic."[23] Thus, the New Mexico CC concluded that access charges apply to

---

19 *In re e.spire Communications Inc, et al. for Arbitration with U S West Communications Inc.*, Co. PUC Decision No. C-98-1286, at 3 (Ruling on Applications for Rehearing, Reargument, or Reconsideration, and Motion for Clarification) (Dec. 3, 1998) (Appendix at Tab 2).

20 *Id.* at 4.

21 *Colorado PUC Ruling on Proposed Amendment to Interconnection Agreement,* at 4.

22 In fact, e.spire's frame relay traffic to date has been split almost equally between the intrastate and interstate jurisdictions.

23 *In re e.spire Communications Inc, et al. for Arbitration with U S West Communications Inc.*, N.M. CC Docket No. 98-382-TC, *Findings of Fact, Conclusions of Law and Order,* at 16, 21-22, 25 (Dec. 1998) (Appendix at Tab 3).

interLATA frame relay traffic and that e.spire must pay rates set forth in U S West's federal access tariff.[24]

The New Mexico CC decision cannot, however, be squared with the FCC's *Local Competition First Report and Order* finding that state commissions have jurisdiction to decide both intrastate and interstate aspects of interconnection.[25] The Supreme Court's recent *Iowa Utilities Board* decision affirmed the Commission's view that the 1996 Act had reworked the traditional jurisdictional lines of separation giving the FCC and its state counterparts jurisdiction over both interstate and intrastate aspects of implementing the competitive provisions of the 1996 Act. Thus, here too, e.spire and Intermedia request an explicit affirmation from the FCC that states may set TELRIC-based rates for interconnection and UNEs used in or useful for the provision of intrastate and interstate services, regardless of the technology deployed to deliver those services.

In sum, the result of e.spire's negotiations and arbitrations is that e.spire, in most cases, still is forced to order frame relay network connections it needs from federal access tariffs at rates that bear no relation to the Commission's TELRIC pricing standards. Frame relay UNEs are not yet available anywhere. Intermedia and most other CLECs seeking to offer advanced services, such as frame relay, are in the same boat. Accordingly, e.spire and Intermedia respectfully request that the Commission affirm its *Local Competition First Report and Order* findings that:

(1) requesting carriers are entitled to Section 251(c) interconnection, provided that such interconnection is not used exclusively for interexchange services;

(2) requesting carriers may use UNEs (including frame relay UNEs) to provide exchange access to themselves and others; and

(3) states commissions have jurisdiction to set TELRIC-based rates for interconnection and UNE used in or useful for the provision of intrastate and interstate services, regardless of the technology deployed to deliver those services.

In addition to defining the specific frame relay UNEs proposed below, this action will be instrumental in promoting and expanding competitive facilities-based offerings of frame relay and other advanced services.

---

[24] *Id.*

[25] *Implementation of the Local Telecommunications Provisions in the 1996 Act,* CC Docket No. 96-98, First Report and Order, 11 FCC Rcd 15499, ¶¶ 84, 92 (1996) (*"Local Competition First Report and Order"*).

III. Specific Frame Relay UNEs

e.spire and Intermedia propose that the Commission adopt specific frame relay UNEs that can be used to expand the reach of competitive frame relay networks and to expand consumer choice in frame relay providers and service options (ILECs may not provide interLATA frame relay services in any state prior to Commission approval of a Section 271 application). The specific frame relay UNEs e.spire proposes are set forth below. Notably, these UNEs generally correspond to rate elements currently contained in the frame relay sections of the ILECs' FCC access tariffs. Copies of the relevant portions of the RBOCs' and GTE's federal access tariffs are attached hereto.

- **Frame Relay Access Link (FRAL).** This UNE corresponds to ILEC local loop and extended link facilities. FRALs must be made available in 2- wire and 4-wire form at speeds of 56/64 kbps, Nx64 kbps, 1.544 Mbps (T-1). DS-3, OCn loops and extended link UNEs or combinations also must be made available as FRALs.

  ILECs require CLECs to purchase special access circuits for use as FRALs. FRALs may be configured as loops or extended links. Below, we highlight provisions in the ILECs' FCC access tariffs which define, require or make available FRALs. Full text from the relevant portions of the largest ILECs' FCC access tariffs are provided in the Appendix to this paper:

  > *Ameritech* calls the FRAL a frame relay UNI connection or NNI connection which is rated as a Local Distribution Channel (a dedicated channel which can be ordered from Section 7, Special Access). In cases where the customer's serving wire center is not a frame relay service point, a hubbed UNI or NNI connection (an extended link-type special access circuit) is deployed and Channel Mileage Termination and Channel Mileage apply. Ameritech Tariff FCC No. 2, page 454.37, § 8.5.2 (Appendix at Tab 4).
  >
  > *Bell Atlantic* calls the FRAL a UNI access connection, collocated interconnection service-UNI port connection, or an NNI port connection with a digital transmission facility. These facilities must be bought as channel terminations from Section 7, Special Access or from Section 19, Collocated Interconnection Services. Bell Atlantic Tariff FCC No. 1, page 918.7, § 16.3.1 (Appendix at Tab 5).
  >
  > *BellSouth* does not appear to have a special name for the FRAL, but sets forth that network interfaces may be accomplished through dedicated access, available in Section 7, Special Access. BellSouth Tariff FCC No. 1, page 21-1, § 21.1.1 (Appendix at Tab 6).

GTE uses the term Frame Relay Access Line which are available as digital special access lines from Section 7, Special Access. GTE FCC Tariff No. 1, page 544, § 18.5(B), page 549 § 18.5(E)(3) (Appendix at Tab 7).

SBC (SWBT) uses the term Frame Relay Service Access Link, which is available from Section 7, Special Access. SWBT FCC Tariff No. 73, page 14-41, § 14.2.3(B) (Appendix at Tab 8).

U S West uses the term Frame Relay Service Access Link, which is available from Section 7, Special Access. U S West FCC Tariff No. 5, page 8-35, § 8.3.2(B)(1). A Transport Channel rate element applies when extended link-type Special Access facilities are needed. *Id.*, page 8-36, § 8.3.2(B)(4) (Appendix at Tab 9).

- **User-to-Network Interface Port (UNI Port).** This UNE provides connectivity between the end user and the ILEC's frame relay network. The UNI Port UNE corresponds to frame relay rate elements that appear in the ILECs' FCC access tariffs. Ports must be offered in DS-0, NxDS-0 (increments of 56/64 kbps up to 1.544 Mbps), DS-1 (T-1), DS-3 and OCn capacities. Charges vary depending on the speed of the port.

  ILECs uniformly establish a UNI Port rate element incorporating recovery for associated packet-switching functions. Below, we highlight provisions in the ILECs' FCC access tariffs which define, require or make available UNI Ports. Full text from the relevant portions of the largest ILECs' FCC access tariffs are provided in the Appendix to this paper.

  Ameritech breaks down its "UNI Connection" and "Hubbed UNI Connection" charges into separate charges per UNI (for the port) and per Local Distribution Channel (the FRAL). Ameritech Tariff FCC No. 2, pages 454.49, 454.49.1, § 8.5.7 (Appendix at Tab 4).

  Bell Atlantic breaks down its "UNI Connection" charge into separate charges for per UNI port and UNI access (FRAL) connections. Bell Atlantic Tariff FCC No. 1, page 918.10, § 16.3.3 (Appendix at Tab 5).

  BellSouth charges for a UNI "Network Interface." BellSouth Tariff FCC No. 1, page 21-4, § 21.1.9(A) (Appendix at Tab 6).

  GTE has a UNI Port rate element. GTE FCC Tariff No. 1, page 549 § 18.5(E)(3) (Appendix at Tab 7).

SBC (SWBT) simply establishes a Port rate element. SWBT FCC Tariff No. 73, page 14-48, § 14.2.4(A)(3) (Appendix at Tab 8).

U S West uses the term "UNIT" or "User-to-Network Information Transfer" to establish a UNI Port charge. U S West FCC Tariff No. 5, page 8-36, § 8.3.2(B)(3) (Appendix at Tab 9).

- **Data Link Connection Identifiers at Committed Information Rates (DLCIs at CIRs).** This UNE defines the path and capacity of virtual circuits over which frame relay frames travel across the frame relay network. The DLCI at CIR UNE corresponds to frame relay rate elements that appear in the ILECs' FCC access tariffs. The costs of establishing DLCIs must be established through a nonrecurring charge. Costs associated with providing CIRs can be recovered through recurring charges. CIRs must be available in the following increments: 0 kbps, 8, 16, 32 kbps, 56/64 kbps, and increments of 64 kbps up to 1556 kbps.

ILEC PVC, DLCI and CIR rate element variations are designed to recover costs associated with establishing PVCs and guaranteeing transmission at specified minimum speeds. Below, we highlight provisions in the ILECs' FCC access tariffs which define, require or make available DLCIs at CIRs (or their equivalent). Full text from the relevant portions of the largest ILECs' FCC access tariffs are provided in the Appendix to this paper.

Ameritech uses a PVC at CIR rate element. Ameritech Tariff FCC No. 2, 2nd revised page 454.51, § 8.5.7(Appendix at Tab 4).

Bell Atlantic charges for additional PVCs per UNI (the first is included in the UNI Port charge) and CIRs separately. Bell Atlantic Tariff FCC No. 1, pages 918.8-918.8.1, § 16.3.1(C) (Appendix at Tab 5).

BellSouth charges for additional DLCIs per UNI (the first is included in the UNI Port charge) and CIRs separately. BellSouth Tariff FCC No. 1, page 21-5, § 21.1.9(B)(1) and (2) (Appendix at Tab 6).

GTE has a PVC CIR capacity rate element. GTE FCC Tariff No. 1, page 561, § 18.5(F)(1)(d) (Appendix at Tab 7).

SBC (SWBT) has a "Logical Link" or "Inter-Network Additive" rate elements at various CIRs. SWBT FCC Tariff No. 73, page 14-48, § 14.2.4(A)(4), page 14-49, § 14.2.4(A)(5), page 14-51 § 14.2.4(B)(4) (CIRs are referred to, but our research does not show that rates for CIRs are set forth in the tariff) (Appendix at Tab 8).

U S West charges for a Priority PVC, based on the speed of the UNIT. U S West FCC Tariff No. 5, page 8-36.2, § 8.3.2(B)(6)(d) (Appendix at Tab 9).

- **Network-to-Network Interface Port (NNI Port).** This UNE provides carrier-to-carrier connectivity to the ILEC's frame relay network. The NNI Port UNE corresponds to frame relay rate elements that appear in the ILECs' FCC access tariffs. Ports must be offered in DS-1 (T-1), DS-3 and OCn capacities. Charges vary depending on the speed of the port.

  ILECs uniformly establish an NNI Port rate element incorporating recovery for associated packet-switching functions. Below, we highlight provisions in the ILECs' FCC access tariffs which define, require or make available NNI Ports. Full text from the relevant portions of the largest ILECs' FCC access tariffs are provided in the Appendix to this paper.

  Ameritech breaks down its "NNI Connection" and "Hubbed NNI Connection" charges into separate charges per NNI (for the port) and per Local Distribution Channel (the NNI trunk). Ameritech Tariff FCC No. 2, pages 454.50, 454.50.1, § 8.5.7 (Appendix at Tab 4).

  Bell Atlantic charges for an "NNI Port Connection." Bell Atlantic Tariff FCC No. 1, page 918.8, § 16.3.1(B) (Appendix at Tab 5).

  BellSouth charges for an NNI "Network Interface." BellSouth Tariff FCC No. 1, page 21-4, § 21.1.9(A) (Appendix at Tab 6).

  GTE has an NNI Port rate element. GTE FCC Tariff No. 1, original page 549 § 18.5(E)(2)(b)(1) (Appendix at Tab 7).

  SBC (SWBT) simply establishes a Port rate element. SWBT FCC Tariff No. 73, page 14-48, § 14.2.4(A)(3) (Appendix at Tab 8).

  U S West uses the term "NNIT" or "Network-to-Network Information Transfer." U S West FCC Tariff No. 5, page 8-36, § 8.3.2(B)(3) (Appendix at Tab 9).

Definition of each of these frame relay UNEs is essential to the development of facilities-based competition in the market for frame relay services. Significantly, the frame relay UNEs set forth above are useful only in combined form and provided that collocation is not a prerequisite to obtaining access to the combination. Because ILECs already use this combination of network elements to provide their own frame relay services, ILECs must provide CLECs with access to the same combination pursuant to Rule 315(b). Nevertheless, because these frame relay UNEs first must be provisioned in combination in order to be usefully combined with a CLEC's own (self-provisioned)

frame relay network elements, the Commission may choose to establish a single frame relay UNE, perhaps called a "PVC UNE" (a term that should be transferable to other packet-switched technologies), which encompasses each of the separate UNEs described above.

Notably, e.spire and Intermedia's frame relay UNEs (or UNE) are (or is) not intended to provide CLECs with a frame relay or data platform. Although packet-switching functionality is necessarily included in the UNEs described above, those UNEs, in turn, will be combined with e.spire or Intermedia's own frame relay transport/switching fabric of network elements. Thus, the UNEs requested represent pieces of the ILEC network that can be used in combination with frame relay network elements deployed in a CLEC's own network.

Similarly, the UNEs requested are not the equivalent of total service resale. Although CLECs should be entitled to resell all end user retail service offerings, pursuant to Section 251(c)(4), e.spire and Intermedia do not intend to simply re-brand and re-bill the frame relay UNEs obtained from ILECs. Instead, as described above, and as depicted in **Diagrams H and I,** e.spire and Intermedia intend to combine ILEC frame relay UNEs with their own frame relay switching and transport facilities in order to provide customers with frame relay service. Thus, a CLEC's end user offering will not duplicate the ILECs' retail service offerings because frame relay UNEs would be used in conjunction with CLECs' own self-provisioned frame relay network elements.

Finally, with regard to the specific frame relay UNEs set forth above, e.spire and Intermedia ask that the Commission explicitly affirm that two basic tenets of its *Local Competition First Report and Order* apply with respect to these UNEs, as well. First, the Commission should affirm that, consistent with Section 252(d)(1), TELRIC pricing rules must be adhered to. In so doing the Commission may deem it appropriate to provide state commissions with guidance on the appropriate oversubscription factor to be used in establishing TELRIC prices. e.spire and Intermedia suggest that a minimum oversubscription factor of 200 percent be used, subject to upward adjustment to match actual ILEC engineering practices. Second, e.spire and Intermedia request specific affirmation of the Commission's finding that use of UNEs may not be restricted by any ILEC or state commission. Once the FCC has determined that a network element meets the unbundling requirements if Section 251(d)(2), neither an ILEC nor a state commission should be able to impose restrictions that limit the usefulness of a UNE. Unless adopted through the FCC's application of the Section 251(d)(2) unbundling standards, such restrictions would appear to be inconsistent with the Act. Below, e.spire and Intermedia apply the Section 251(d)(1) unbundling standards to the specific frame relay UNEs proposed in this section.

IV. Data UNEs Satisfy the "Impair" Standard of Section 251(d)(2)

Each of the frame relay UNEs described above qualifies for unbundling under Section 251(d)(2). As e.spire and Intermedia indicated in their initial joint comments in

this proceeding, they support the interpretations of Section 251(d)(2)'s "necessary" and "impair" standards proposed in the initial comments of ALTS.[26] Since unbundling of none of the frame relay network elements would provide CLECs with access to "proprietary" information, software or hardware, the "necessary" test of Section 251(d)(2)(A) does not apply. Instead, the "impair" test of Section 251(d)(2)(B) applies.

e.spire and Intermedia have endorsed the "materially diminish" limiting standard for the impair test, proposed by ALTS and others, and the notion that a CLEC's ability to compete would be diminished materially if no reasonably interchangeable substitute was available from a wholesale network element market. However, e.spire and Intermedia submit that, under any reasonable interpretation of the impair standard, the frame relay UNEs proposed herein meet the Act's unbundling standards. Without UNEs, e.spire and Intermedia are at a decided competitive disadvantage and, in many cases, will be unable to offset ILEC advantages gained through an embedded customer base that has financed the ILECs' extensive frame relay network deployment, as well as their ubiquitous end office, loop and transport facilities on which frame relay service depends.

Today, e.spire and Intermedia's ability to compete for frame relay customers is limited by the reach of their facilities-based frame relay and transport networks. The simple fact is, that despite substantial frame relay and transport network deployment and investments, many customers seek to interconnect multiple LANs and some of those LANs are beyond the current reach of e.spire and Intermedia's frame relay networks. Neither e.spire nor Intermedia have access to capital to justify self-provisioning of additional frame relay infrastructure to meet the needs – or reach all the LANs – of every potential customer. UNEs are needed to fill-in the gaps and to extend the reach of e.spire and Intermedia's frame relay networks until demand or potential demand in a particular geographic area can justify the $250,000 (approximately) expenditure for deployment of an additional frame relay switch (this figure does not include the cost of installation, end office space, or trunk connections to the existing frame relay network). Thus, without UNEs, e.spire and Intermedia, in many cases, will have almost no economically viable means of competing with an ILEC that has deployed frame relay switches closer to the customer's multiple LAN locations.

This point is illustrated in **Diagrams H and I**. In the example provided, an ILEC taking advantage of its embedded customer base and economies of scale, has deployed frame relay switching equipment in each major business center within a LATA. In addition, the ILEC already owns ubiquitous loop and transport plant, provides extended link arrangements to reach distant switches, and needs no collocation to bring a frame relay customer onto its own network. Thus, the ILECs' well-developed and widely-deployed frame relay networks, together with their ubiquitous end office, loop and transport facilities, put ILECs in an excellent position to offer frame relay services economically to a customer seeking connectivity between LANs in each of these business centers.

---

[26] e.spire/Intermedia Joint Comments, at 12 (CC Docket No. 96-98, filed May 26, 1999); ALTS Comments, at 10-33 (CC Docket No. 96-98, filed May 26, 1999).

For the same customer, e.spire and Intermedia have few alternatives – and no reasonable substitute for the proposed frame relay UNEs. As depicted in the top scenario on **Diagram I**, a CLEC, in theory, could collocate and order loop and transport UNEs to deliver the customer's traffic to the nearest frame relay switch. The ILECs' unwillingness and near uniform inability to provision collocation, loops and transport quickly and at prices which comply with the Commission's TELRIC pricing standard make this option an impractical one. Aside from substantial time-to-market and cost disparities offered by this alternative, no ILEC has demonstrated that it can deliver or put together all the necessary pieces reliably. Tolerances for quality and reliability shortfalls in the data market are minimal at best.

An extended link UNE or combination also could be used to deliver the traffic to e.spire or Intermedia's nearest frame relay switch. Although the availability of an extended link combination would eliminate the expense and delay involved with collocation, ILECs have demonstrated no proficiency in provisioning loop and transport UNEs and have little successful experience in offering them to competitors through their CLEC/UNE provisioning centers. Here, too, time-to-market, quality, and cost factors weigh heavily in favor of unbundling. Even assuming that an ILEC could provision an extended link arrangement with the same proficiency as it does equivalent special access circuits, the cost factor associated with the transport component of the link likely would prevent CLECs from taking this option, as the link would be too expensive to recover in a competitive service offering (*i.e.*, one that would entice a customer to switch to a competitive provider, while affording the CLEC the opportunity to recover all costs plus a reasonable profit). Thus, in order to compete with the ILECs' packet-switched frame relay service offerings, CLECs need access to UNEs at prices that approximate the cost structure of the ILECs' frame relay networks.

Notably, the Supreme Court did not say that the Commission could not rely on cost as the deciding factor in determining whether the unbundling standards of the Act have been met. Instead, the Court's guidance suggests that, in order to justify an unbundling requirement under Section 251(d)(2)'s unbundling standards, a cost discrepancy must be more than *de minimis*.[27] Along with ALTS, e.spire and Intermedia submit that a cost differential, if relied upon as the sole factor in favor of unbundling, must by itself diminish materially a competitor's ability to compete. In such cases, e.spire and Intermedia submit that it is exceedingly difficult to establish a bright-line standard for "how much" of a cost differential should be considered material. A better approach is for the Commission to rely on its own expertise in determining whether costs and other factors will result in a material diminishing of a competitor's ability to offer competitive services that will entice consumers to switch to a CLEC for all or some of its telecommunications needs.

Moving to the tariffed ILEC frame relay services represented by the scenario depicted in the middle of **Diagram I,** e.spire and Intermedia maintain the view that neither special access nor resale at an avoided cost discount can be deemed reasonable substitutes for UNEs. Here, too, the difference comes down to costs. e.spire and

---

[27] *See AT&T Corp. v. Iowa Utils. Bd.*, 119 S.Ct. 721, 735 (1999).

Intermedia are unaware that reliable TELRIC studies for the ILECs' frame relay network elements are available. However, e.spire and Intermedia also are unaware of any ILEC statistics that would rebut the presumption that the rates set forth for frame relay elements in their federal access tariffs dramatically – and materially – exceed TELRIC. Indeed, the wide range of rates for frame relay services contained in the various ILECs' access tariffs suggests that it is likely that at least some of those rates bear little relation to cost. Resale also fails to provide a reasonable substitute for UNEs. Avoided cost resale offers a cost structure roughly 30-40 percent higher than TELRIC. It is beyond question that cost discrepancies such as these cannot be absorbed by competitors. Indeed, faced with similar cost discrepancies, e.spire and many others were forced to abandon resale of ILEC voice services, even as a temporary means of establishing a customer base.

At bottom, the same cost and ubiquity factors which compel unbundling of circuit-switched UNEs indicate that unbundling of frame relay and data UNEs also is consistent with Section 251(d)(2). Without unbundled access to frame relay network elements, e.spire and Intermedia will, in many cases, be unable to provide competitive frame relay service offerings to customers seeking connectivity between geographically dispersed LANs. ILECs generally are not, as they claim, new entrants into the frame relay or data markets. ILEC frame relay networks generally predate the 1996 Act and ILEC frame relay services incorporate the same ubiquitous network of central and tandem offices, loops, and transport facilities that the Commission already has determined that the ILECs must share with competitors through collocation and unbundling. Under the Act, the benefits of incumbency must be shared, regardless of the technology used to provide services that ride on or take advantage of those benefits.

The Commission's 706 mandate and the public interest also compel definition of frame relay and other new data UNEs. While frame relay UNEs may not accelerate the pace of competition in rural America, their impact on the small businesses driving today's Internet boom and economic expansion could be dramatic. As in the voice world, frame relay UNEs will extend the reach of competitive facilities-based networks and, thereby, will promote and maximize additional facilities deployment by competitors. Extended reach means more choices for consumers. Extending competitor's reach also will place pressure on ILECs to improve their frame relay service offerings and to move prices down toward cost.

Conclusion

There is much to be done to ensure proper implementation of the procompetitive provisions of the 1996 Act with respect advanced packet-switched data services. In its *Section 706/Advanced Services Order,* the Commission held that Section 251(c) applies equally to circuit-switched and packet-switched worlds, as the Act is technology neutral. The discussion of the current state of frame relay interconnection contained herein suggests that the Commission's first steps are decidedly steps in the right direction, but clarification and enforcement are now desperately needed.

Interconnection, however, is only the beginning. The Act provides for three methods of competition: interconnection, UNEs and resale. e.spire and Intermedia may pursue data resale opportunities in the Commission's *Advanced Services* docket or in an enforcement proceeding. The focus here, however, is on UNEs.

Frame relay and data UNEs are not currently available. They should be. The specific frame relay UNEs proposed by e.spire and Intermedia meet the Section 251(d)(2) unbundling standards. e.spire and Intermedia's ability to compete on the same terms as the ILECs materially is diminished by the absence of an unbundling requirement. ILECs are not new entrants into the frame relay or data markets. ILEC frame relay networks predate the 1996 Act and ILEC frame relay services incorporate the same ubiquitous network of central and tandem offices, loops, and transport facilities that the Commission already has determined that the ILECs must share with competitors through collocation and unbundling. The Commission's 706 mandate and the public interest also compel definition of new data UNEs, such as those proposed herein for frame relay. While frame relay UNEs may not accelerate the pace of competition in rural America, their impact on the small businesses driving today's Internet boom and economic expansion could be dramatic. As in the voice world, frame relay UNEs will extend the reach of competitive facilities-based networks and, thereby, will promote and maximize additional facilities deployment by competitors. Extending competitor's reach also will place pressure on ILECs to improve their frame relay service offerings and to move prices down toward cost.

Congress and this Commission already have voted in favor of competition. In doing so, a promise was made to new entrants bold enough to take on the entrenched monopolies – and to consumers who stand to reap the innovations and cost savings that competition promises to bring. Thus far, the road to competition has been slow, but steady. In this landmark proceeding, the Commission has a chance to quicken the pace and extend the reach of competition for all services and in all markets. The Commission also has before it the chance to expand the scope of facilities/UNE-based competition beyond the circuit-switched world and into the packet-switched world. e.spire and Intermedia urge the Commission to seize this opportunity. By requiring unbundled access to frame relay and other data UNEs, the Commission can unleash the same pro-competitive forces in packet-switched data markets that ILECs already are responding to on the circuit-switched side. There is no better time to act than now.

DC01/HEITJ/85968.4

Frame Relay and Data UNEs

CC Docket No. 96-98
August 9, 1999

APPENDIX

e.spire Communications, Inc.
Intermedia Communications Inc.

Frame Relay and Data UNEs

CC Docket No. 96-98
July 21, 1999

e.spire Communications, Inc.
Intermedia Communications Inc.

APPENDIX

Tab	*Document*
1	**Arizona Corporation Commission Order re e.spire/U S West Frame Relay Arbitration**
2	**Colorado Public Utilities Commission Orders re e.spire/U S West Frame Relay Arbitration**
3	**New Mexico Corporation Commission Order re e.spire/U S West Frame Relay Arbitration**
4	**Frame Relay Service Excerpts from Ameritech Operating Companies Tariff FCC No. 2**
5	**Frame Relay Service Excerpts from The Bell Atlantic Telephone Companies Tariff FCC No. 1**
6	**Frame Relay Service Excerpts from BellSouth Telecommunications, Inc. Tariff FCC No. 1**
7	**Frame Relay Service Excerpts from GTE System Telephone Companies Tariff FCC No. 1**
8	**Frame Relay Service Excerpts from Southwestern Bell Telephone Company Tariff FCC No. 73**
9	**Frame Relay Service Excerpts from U S West Communications Tariff FCC No. 73**

Attachment A

DOCUMENT OFF-LINE

This page has been substituted for one of the following:

o An oversize page or document (such as a map) which was too large to be scanned into the ECFS system.

o Microfilm, microform, certain photographs or videotape.

• Other materials which, for one reason or another, could not be scanned into the ECFS system.

The actual document, page(s) or materials may be reviewed by contacting an Information Technician. Please note the applicable docket or rulemaking number, document type and any other relevant information about the document in order to ensure speedy retrieval by the Information Technician.

One appendix of approximately 600 pages.