ORIGINAL

EX PARTE OR LATE FILED

KELLOGG, HUBER, HANSEN, TODD & EVANS, P.L.L.C.

1301 K STREET, N.W.
SUITE 1000 WEST
WASHINGTON, D.C. 20005-3317

(202) 326-7900
FACSIMILE:
(202) 326-7999

MICHAEL K. KELLOGG
PETER W. HUBER
MARK C. HANSEN
K. CHRIS TODD
MARK L. EVANS
AUSTIN C. SCHLICK

STEVEN F. BENZ
NEIL M. GORSUCH
GEOFFREY M. KLINEBERG
REID M. FIGEL
HENK BRANDS
SEAN A. LEV
COURTNEY SIMMONS ELWOOD

September 27, 1999

By hand

Howard A. Shelanski
Chief Economist
Federal Communications Commission
445 12th Street, S.W.
Room 7-C-452
Washington, DC 20554

Re: In re matter of Metrocall, Inc. v. BellSouthTelecommunications, BellSouth Corporation, GTE Telephone Operations, Pacific Bell Telephone Company, US West Communications, Inc., File Nos. E-98-14, E-98-16, E-98-17, E-98-18; Petitions for Reconsideration of the Implementation of the Local Competition Provisions in the Telecommunications Act of 1996, CC Docket Nos. 96-98, 95-185

Dear Howard:

In anticipation of our meeting tomorrow, I am sending you a copy of a white paper filed with the Commission on June 25, 1999. It includes an economic report by Strategic Policy Research on An Economically Efficient Regime for Paging Interconnection. These materials are already in the public record.

I look forward to seeing you.

Sincerely,

Michael K. Kellogg

Enclosure

COPY

White Paper on LEC-Paging Interconnection

RECEIVED
JUN 25 1999
FEDERAL COMMUNICATIONS COMMISSION
OFFICE OF THE SECRETARY

Introduction and Summary

The Commission's policy governing the interconnection of LECs and paging carriers has been in a state of disarray for more than two years. At the heart of the confusion is a core disagreement — can a paging carrier that does not generate reciprocal traffic and that does not terminate calls generated on the PSTN nonetheless demand "reciprocal compensation" for the traffic it receives from LECs? SBC has explained in detail elsewhere why the only answer to this question that is consistent with the terms of the 1996 Act and the language of the FCC's regulations is "no." See Application for Review of Southwestern Bell Telephone Co., Pacific Bell, and Nevada Bell, CCB/CPD Docket No. 97-24 (filed Jan. 29, 1998). The purpose of this paper is to emphasize that the policy of the Act requires the same result.[1]

Congress's purpose in requiring the payment of reciprocal compensation for the transport and termination of local telecommunications traffic was to promote competition in the local exchange market. By requiring LECs to compensate one another for the traffic they exchange, the Act places competitors on an even footing. In the case of one-way paging providers, this policy has no application. The paging company cannot provide local exchange service, and therefore is not in competition with the LEC from which it receives calls. Under these circumstances, to require the payment of compensation from one carrier to another creates a subsidy, whereby one type of service (local exchange) helps to pay for another (paging). The Act reflects Congress's policy against such subsidies.

The language of the Commission's regulations is consistent with the Act in this regard, but despite this language, the Commission's Local Interconnection Order[2] has produced confusion because passages in the Commission's discussion appear to suggest that paging carriers are entitled to reciprocal compensation payments. Even worse, the Metzger Letter — which has been before the Commission on review for over a year — misinterpreted those rules by reading them to require LECs to provide paging carriers free interconnection facilities. This decision not only ignored the plain terms of the Commission's regulations, it was also wholly misguided as a matter of interconnection policy. The provision of paging service generates costs, including the cost of connecting the paging provider's equipment to the PSTN. Under basic economic principles, those

---

[1]In An Economically Efficient Regime for Paging Interconnection, John Haring and Jeffrey H. Rohlfs explain why the payment of "reciprocal compensation" to paging carriers is economically inefficient. John Haring and Jeffrey H. Rohlfs, Strategic Policy Research, An Economically Efficient Regime for Paging Interconnection (Apr. 14, 1999) (attached hereto as Exh. A). That analysis underlines the urgency of clarifying and rationalizing the Commission's rules in this area.

[2]First Report and Order, Implementation of the Local Competition Provisions in the Telecommunications Act of 1996, 11 FCC Rcd 15499 (1996), vacated in part, Iowa Utils. Bd. v. FCC, 120 F.3d 753 (8th cir. 1997), aff'd in part and rev'd in part, AT&T Corp. v. Iowa Utils. Bd., 119 S. Ct. 721 (1999).

costs should be recovered from the cost-causer — the paging provider — not from the local exchange carrier. Otherwise, the rule simply produces a naked wealth transfer — a subsidy — flowing from the LEC (and its subscribers and shareholders) to the paging provider (and its subscribers and shareholders).

Commission action to address this problem is long overdue. As a first step, the Commission should rule on SBC's Application for Review of the Metzger Letter, making clear that nothing in the Commission's regulations requires the provision of free facilities to paging providers. Second, the Commission should make clear that its interconnection rules only displace state tariffs when a requesting carrier has requested negotiations pursuant to section 252 of the Act. When a paging carrier chooses to order interconnection facilities from state tariffs, they must pay the charges they incur. Finally, the Commission should take action on the petitions for reconsideration on this issue that have been pending in the Commission for over two years. In doing so, the Commission should make clear that reciprocal compensation rules do not apply to carriers that do not provide local exchange service.

BACKGROUND

LECs and paging carriers have been locked in a dispute dating back to the adoption of the Local Interconnection Order concerning the framework governing LEC-Paging Interconnection. Section 251(b)(5) requires local exchange carriers — incumbents and new entrants alike — to "establish reciprocal compensation arrangements for the transport and termination of telecommunications." 47 U.S.C. § 251(b)(5). The Commission has interpreted this provision to require LECs to establish reciprocal compensation arrangements not only with other LECs, but also with CMRS providers. See Local Interconnection Order, 11 FCC Rcd at 15997, ¶ 1008. The Commission has also stated that the duty applies to paging providers as well. Id.[3]

The commentary in the Local Interconnection Order, however, has hardly resolved the matter, for the plain terms of the Commission's rules — as well as other interpretive commentary in the Order — indicate that the reciprocal compensation obligation applies only when two carriers exchange traffic. Section 51.701(e) of those rules defines a reciprocal compensation arrangement as one in which "each of the two carriers receives compensation from the other carrier." 47 C.F.R. § 51.701(e) (emphasis added). Paging providers are unable to originate traffic that terminates on the PSTN, and LECs therefore cannot "receive[]" compensation from paging

---

[3]The Commission also included a rule dictating how state commissions must set reciprocal compensation rates for licensees in the Paging and Radiotelephone Service, Narrowband Personal Communications Services, and Paging Operations in the Private Land Mobile Radio Services. 47 C.F.R. § 51.711(c). Although some licensees in this service may be considered to provide telephone exchange service, most do not. The rule is therefore confusing and should be eliminated. Section 51.711(b) of the Commission's rules instead should be modified to cover the situation where the competing carrier's costs are lower — as well as the situation where they are higher — than those of the incumbent.

providers for calls originated on their network.[4] According to the Commission's own definition, therefore, paging providers fall outside the obligation imposed by section 51.703(a) of its rules. See 47 C.F.R. § 51.703(a) (requiring LECs to "establish reciprocal compensation arrangements . . . with any requesting telecommunications carrier"). The FCC reiterated this same point in its Local Interconnection Order, noting that it uses the term "'reciprocal compensation' . . . to mean that compensation flows in both directions between interconnecting networks." 11 FCC Rcd at 16045 n.2634 (emphasis added).[5]

Moreover, as SBC has argued in detail elsewhere (see Application for Review), paging providers do not carry out call termination as defined in the Commission's rules. The Commission defined "termination" as "the switching of local telecommunications traffic at the terminating carrier's end office switch, or equivalent facility, and delivery of such traffic to the called party's premises." 47 C.F.R. § 51.701(d). Yet paging carriers do not switch traffic; rather, they store information sent by a caller from the PSTN and initiate a separate broadcast communication. The caller may have ended the call well before the paging signal is broadcast.

Because of the ambiguity in the Commission's treatment of paging providers, two parties — Kalida Telephone Company and the Local Exchange Carrier Coalition — filed petitions for reconsideration of the Commission's order on this point.

Meanwhile, paging providers seized on the order as an excuse to avoid their responsibility to pay for the facilities they had ordered from state tariffs. Incredibly, paging carriers did not, as a rule, even bother to negotiate new interconnection agreements with LECs — they just stopped paying their bills. When SBC sought clarification that this behavior was contrary to the Act and the Commission's rules, the Common Carrier Bureau issued the "Metzger Letter," which declared

---

[4]Some have raised the possibility that paging carriers could use their spectrum to provide two-way service, as well as one-way service. To the extent that such "two-way" service involves sending a message from a pager to the paging terminal for retrieval or other similar function, there is no question of the paging subscriber originating traffic. If, on the other hand, technology were developed that would permit a paging subscriber directly to originate traffic on the PSTN using the paging unit, such paging provider might be able to offer a service equivalent to exchange service or exchange access. If paging providers were able to compete with local telephone service providers in this way, they might well be entitled, under the Commission's current rules, to enter into reciprocal compensation arrangements pursuant to sections 251 and 252. SBC is unaware of any paging provider that offers this type of service.

[5]The Commission has stated that, "[a]s an additional option for reciprocal compensation arrangements for termination services, we conclude that state commissions may impose bill-and-keep arrangements" but only "if traffic is roughly balanced in the two direction and neither carrier has rebutted the presumption of symmetrical rates." Local Interconnection Order, 11 FCC Rcd at 16054-55, ¶¶ 1111-12. In such cases, payments are offset as an accounting matter, though no funds actually change hands.

that because LECs were prohibited from charging co-carriers for traffic (under the terms of 47 C.F.R. § 51.703(b)), LECs could not charge paging providers for facilities either. SBC has sought Commission review of that opinion; so far, the Commission has declined to endorse or to repudiate the Metzger Letter.

DISCUSSION

The language of the 1996 Act, as well as its structure and legislative history, make plain that the purpose of the reciprocal compensation provision is to promote competition among LECs. Given this legislative purpose, a sensible policy on reciprocal compensation would require providers of local exchange service — wireline or wireless — to establish reciprocal compensation arrangements. Paging providers, because they do not provide local exchange service, should not be entitled to compensation for the traffic they receive. And paging carriers should be required to bear the added costs that they impose on the network.

In light of this policy, the Commission should overrule the Metzger Letter, and it should do so immediately. Second, the Commission should promptly clarify that, under its current rules, paging providers that do not originate traffic do not qualify for reciprocal compensation. Third, the Commission should clarify on reconsideration that reciprocal compensation applies only to providers of local exchange service.

I. The Purpose of Reciprocal Compensation Is To Promote Local Competition, Not To Create a Subsidy for Paging

Congress's purpose in requiring the payment of reciprocal compensation was not simply to require payment to any carrier that terminates traffic; had this been Congress's goal it could have omitted the term "reciprocal" from the statute. Rather, the reciprocity requirement ensures that competitors in the local exchange market are on an even footing in exchanging traffic. In a free market, the incumbent local exchange carrier could demand compensation from a competitor for access to its network and would have no incentive to pay the competitor for access to the competitor's network, because access to the incumbent's existing base of subscribers is far more valuable to the competitor than access to the competitor's base of subscribers is to the incumbent. The Act therefore provides that, when a competitor replaces an incumbent as a provider of local exchange service, compensation between the two providers must be reciprocal, thereby depriving the incumbent of the advantage of its embedded subscriber base. This policy applies to wireline and wireless telephone providers alike. See Local Interconnection Order, 11 FCC Rcd at 15999-16000, ¶ 1013 ("[T]hese [two-way] CMRS providers offer services that are 'comparable' to

telephone exchange service[;] these services may become a true economic substitute for wireline local exchange service in the future.").[6]

In the case of paging providers, however, this policy has no application. The paging provider cannot provide local exchange service, and therefore is not in competition with the incumbent LEC: simply put, paging service is not a substitute for local telephone service. See id. 15996, ¶ 1005 ("[P]aging providers . . . do not offer local exchange service or exchange access"). Under these circumstances, to require the payment of compensation from one carrier to another simply creates a subsidy, whereby one type of service (local exchange) helps to pay for another (paging).

Nothing in the Act contemplates that result. To the contrary, one important aspect of Congress's pro-competitive policy was the determination that competitive services should reflect their true costs. Thus, for example, section 254(k) prohibits telecommunications carriers from "us[ing] services that are not competitive to subsidize services that are subject to competition." 47 U.S.C. § 254(k). Moreover, Congress required that the FCC and the States adopt rules to ensure that services that are "included within the general definition of universal service" — like local telephone service, but unlike paging[7] — "bear no more than a reasonable share of the joint and common costs of facilities used to provide those services." Id. Simply put, this provision "prohibits cross-subsidization." Conf. Rep. at 134. Congress expressed the same concern in deregulating the payphone industry. See 47 U.S.C. § 276(b)(1)(B) (requiring LECs to remove any subsidies flowing from their local exchange or exchange access operations to support pay telephones). Thus to require that local exchange service subsidize paging would be profoundly inconsistent with the motivating spirit behind the Act.

Reading section 251(b)(5) in context confirms that it applies to local exchange competitors. Each of the duties enumerated in section 251(b), either explicitly or by implication,

---

[6]The Commission's policy of mutual compensation for cellular telephone providers has always emphasized the significance of cellular providers' two-way capability:

> We are concerned that a cellular carrier may employ its mobile telephone switching office (MTSO) to originate mobile calls directed to landline customers, and to terminate landline calls destined for cellular subscribers. Since such a situation involves a co-carrier using its own facilities to originate and complete traffic, a landline company is required to compensate a cellular operator for the switching costs incurred in terminating a call from a landline to a mobile unit.

Memorandum Opinion and Order on Reconsideration, Cellular Interconnection Proceeding, 4 FCC Rcd 2369, 2373, ¶ 27 (1989) (emphasis added) ("Cellular Order").

[7]See Report and Order, Federal-State Joint Board on Universal Service, 12 FCC Rcd 8776, 8809, ¶ 61, 8823, ¶ 84 (1997).

is imposed not only on all LECs, but also for the benefit of competitors in the local exchange market. Thus, section 251(b)(1) requires a LEC "not to prohibit, and not to impose unreasonable or discriminatory conditions or limitations on, the resale of its telecommunications services." 47 U.S.C. § 251(b)(1). Necessarily, if a LEC provides a local exchange service for resale, the reseller, too, is providing local exchange service. Section 251(b)(2) requires LECs to provide "number portability," that is, the ability of a subscriber to keep his number after changing providers. 47 U.S.C. § 251(b)(2); see 47 U.S.C. § 153(30). Again, this requirement is specifically designed to facilitate competition by reducing the costs to local exchange subscribers of changing telephone numbers. See Third Report and Order, Telephone Number Portability, 13 FCC Rcd 11701, 11702, ¶ 3 (1998) ("Congress recognized that the inability of customers to retain their telephone numbers when changing local service providers hampers the development of local competition.") (emphasis added). Section 251(b)(3) is even more explicit — it addresses "[t]he duty to provide dialing parity to competing providers of telephone exchange service and telephone toll service." 47 U.S.C. § 251(b)(3) (emphasis added); see 47 U.S.C. § 153(15) (defining "dialing parity" as the ability to provide competitive telecommunications services without the use of special access codes). And section 251(b)(4) addresses the need to provide "competing providers of telecommunications services" with access to poles, ducts, conduits, and rights-of-way. 47 U.S.C. § 251(b)(4) (emphasis added).

The legislative history of the 1996 Act helps to confirm what the language and structure of the text reveal: that Congress intended the reciprocal compensation provision in the Act to apply to LECs in order to promote competition between LECs. The Conference Report that accompanied the 1996 Act explains briefly but clearly the pro-competitive intent behind section 251(b). The Conference explained that the Senate bill, S. 652, would impose duties on local exchange carriers "to provide interconnection with other telecommunications carriers that have requested interconnection for the purpose of providing telephone exchange service or exchange access service." S. Conf. Rep. No. 230, 104th Cong., 2d Sess. 117 (1996) ("Conf. Rep.") (emphasis added); see S. 652, 104th Cong., 1st Sess. § 101 (1995) (proposing new § 251(a)(1)(A)). The corresponding reciprocal compensation provision in the House amendment was likewise understood to be a term and condition of interconnection "integral to a competing provider seeking to offer local telephone services over its own facilities." Conf. Rep. at 120 (emphasis added); see House Amendments to S. 652, 104th Cong., 1st Sess. 7 (Oct. 12, 1995) ("House Amendments") (setting forth terms of "[i]ntercarrier compensation" for "interconnection of the network facilities of a competing provider of telephone exchange service") (emphasis added). The resulting conference agreement "incorporate[d] provisions from both the Senate bill and House amendment." Conf. Rep. at 121. Like the Senate and House bills, the final version of the law explained section 251(b) in terms of its role in regulating the "local exchange market" including "new entrants." Id.

This legislative history reveals that the genesis of the reciprocal compensation provision was Congress's intention to promote competition in the local exchange market — an understanding that is consistent with the language and structure of that provision. The rationale behind the statute was clearly to provide for reciprocal recovery of costs between two

interconnecting local exchange networks. See id. at 120 (noting that any interconnection agreement between "competing provider[s] [of] . . . local telephone services . . . must provide for mutual and reciprocal recovery of costs"). Once again, that rationale cannot justify application of this provision to a paging carrier that does not exchange traffic with the interconnecting LEC.

Paging carriers have sometimes argued that LECs receive a "benefit" when a paging call is made on the local network. This argument, no matter how it is couched, is both irrelevant and inaccurate. To the extent that paging carriers mean to suggest that LEC subscribers' ability to make paging calls renders local exchange service more valuable, this does not suggest that the LEC must defray the cost of the paging service — this would be like requiring local telephone companies to make payments to mail-order businesses on the logic that the ability to order from catalogs makes local telephone service more "valuable." There is no economic basis for such a policy.

Alternatively, paging carriers sometimes argue that when paging carriers take traffic through a Type 2 interconnection arrangement, LECs avoid some end office switching. As an initial matter, this does not begin to justify the payment of compensation in the case of Type 1 interconnection. In that case, from the point of view of the LEC network, the paging terminal looks precisely like an end-user with multiple lines. See Cellular Order, 4 FCC Rcd at 2372, ¶ 20 n.16. The LEC avoids no costs, for the network must perform all the switching and signaling that it would perform in the case of service to an end user. Id.

But, even if the paging carrier were taking traffic off the LEC's tandem, this would not mean that the paging carrier has substituted its own local exchange service for the LEC's — the LEC remains the sole local exchange provider in the transaction. Long distance carriers, too, take traffic off the LEC tandem, but they are nonetheless required to pay for access, because long distance service is an economic complement to, rather than an economic substitute for, local exchange service. To the extent that Type 2 interconnection can be provided more cheaply than Type 1, those cost savings are reflected in the cost-based interconnection rates that LECs charge under state tariffs.

Moreover, as a matter of fact, paging calls — even when terminated from the tandem, rather than from an end office — are more expensive to carry than the average telephone call. This is because paging calls tend to be very short and call set-up is more costly than maintaining a circuit once the circuit is established. It is simply factually inaccurate to claim that Type 2 interconnection saves LECs costs.[8] The economic argument is unequivocal: paging providers are cost causers.

---

[8]See Haring & Rohlfs, An Economically Efficient Regime for Paging Interconnection, at 10.

II. Reciprocal Compensation Should Apply to Exchange Service Providers

In light of the congressional policy underlying the reciprocal compensation provisions in the Act — the promotion of local exchange competition — the basic reciprocal compensation rule must be that the reciprocal compensation obligation applies to exchange service providers alone. Thus, LECs must enter into reciprocal compensation arrangements with other LECs, and with two-way CMRS providers that are providing local exchange service or exchange access.

Paging carriers, as the Commission has explicitly found, do not provide local exchange or exchange access service (Local Interconnection Order, 11 FCC Rcd at 15996, ¶ 1005), and they therefore do not qualify for reciprocal compensation. At the same time, LECs take no issue with the Commission's determination that LECs should be prohibited from charging paging carriers for traffic originated on LECs' networks. In other words, just as paging carriers should not be able to charge LECs for the services they provide to their subscribers, LECs should not offset the cost of providing local exchange service to their subscribers through traffic charges on traffic delivered to one-way paging providers.

Likewise, paging carriers should bear the costs of the facilities that paging carriers order from LECs to interconnect the paging network with the LEC network. This is in keeping with the Commission's consistent policy. Prior to the enactment of the 1996 Act, the Commission announced its intention to continue its examination of policies related to LEC-CMRS interconnection. See Notice of Proposed Rulemaking, Interconnection Between Local Exchange Carriers and Commercial Mobile Radio Service Providers, 11 FCC Rcd 5020 (1996). In that NPRM, the Commission articulated general pricing principles governing the rates charged for LEC-CMRS interconnection. First, the Commission made clear that "[t]he cost of a dedicated facility can be attributed directly to the party ordering the service that uses that facility." Id. at 5041, ¶ 43. "To the extent that the benefits of a dedicated facility accrue to the party to whom it is dedicated, it is efficient for that party to pay charges that recover the full cost of the facility" on a non-traffic-sensitive basis. Id.

That principle should govern the treatment of paging carriers. When a paging provider orders an interconnection facility from a LEC, the paging service provider "causes" the cost and therefore should bear that cost (and pass it on to its subscribers). Paging service providers offer no service at all that does not depend upon access to the public switched network. That is, to the extent that the one-way paging provider offers a service worth having, it is the ability to receive calls from the network for which the paging carrier can charge its subscribers. Of course, the LEC cannot require the paging carrier to purchase the interconnection facility from the LEC — the paging provider could choose to construct its own facility, or to purchase it from a CLEC. But, to the extent that the paging carrier orders facilities from the LEC, it must pay for those facilities.

III. What Is To Be Done?

The Commission has allowed the paging interconnection issue to fester for far too long. Accordingly, the Commission should take two immediate steps to address the problem.

First, the Commission should immediately rule on SBC's Application for Review and reject the Metzger Letter. As LECs have pointed out again and again, a policy that permits paging carriers to order whatever facilities they want out of state tariffs for free while refusing to negotiate as required by the Act undermines the Act's procedural regime, its interconnection policy, and the ratemaking authority of the States. The Metzger Letter purported to grant the paging industry a massive subsidy without a breath of policy justification. The Commission needs to set the situation right.

Second, in ruling on the pending Petition for Reconsideration, the Commission should make clear that, despite confusing language in the Local Interconnection Order, the Commission's rules mean what they say: that reciprocal compensation arrangements must be reciprocal, and that compensation is owed for call termination, not for the mere receipt of a call terminated on the PSTN.

In addition, the Commission should make clear that 1) if a carrier chooses to order intrastate interconnection facilities out of state tariffs, it must pay the tariffed rates; 2) the Commission's policy with regard to CMRS interconnection is to permit CMRS providers to negotiate interconnection arrangements under sections 251 and 252, but that the Commission has otherwise not preempted state interconnection rates; and 3) cost-based state interconnection tariffs are consistent with federal LEC-CMRS interconnection policy. Paging carriers may still negotiate interconnection arrangements with LECs pursuant to sections 251 and 252, and invoke state arbitration if necessary. But the reciprocal compensation rules of Subpart H of Chapter 51 would not apply in such negotiations.

Third, on a going-forward basis, the Commission should make clear that the reciprocal compensation obligation of section 251(b)(5) applies only to providers of local exchange service, wireline or wireless. No telecommunications carrier should be required to pay for traffic originated on the network of an interconnecting carrier, that is, to defray the underlying costs of the interconnecting carrier's network. Section 51.703(b) — as written, not as distorted by the Metzger Letter — should remain in effect. But providers of services other than local exchange service should be required simply to pay cost-based rates for the interconnection facilities they choose to order — or they can supply them on their own (or use the services of a CLEC). The distortions that the paging industry is trying to promote through its misapplication of the current rules should be brought firmly to a halt.

Proposed Modifications to Subpart H

§ 51.222 A LEC may not assess charges on any other telecommunications carrier for local telecommunications traffic that originates on the LEC's network.

§ 51.701(a) The provisions of this subpart apply to reciprocal compensation for transport and termination of local telecommunications traffic between LECs and other providers of telephone exchange service, including providers of commercial mobile service that provide telephone exchange service.

§ 51.703 Each LEC shall establish reciprocal compensation arrangements for transport and termination of local telecommunications traffic with any requesting provider of telephone exchange service.

§ 51.703(b) — Moved to § 51.222.

§ 51.709(b) The rate of a telephone exchange service provider providing transmission facilities dedicated to the transmission of traffic between two telephone exchange service providers' networks shall recover only the costs of the proportion of that trunk capacity used by an interconnecting provider of telephone exchange service to send traffic that will terminate on the providing telephone exchange service provider's network. Such proportions may be measured during peak periods.

§ 51.711(b) [This regulation should be modified to provide generally that state commissions may establish asymmetrical rates where carriers' costs differ.]

§ 51.711(c) Omit

Exhibit A

STRATEGIC
POLICY
RESEARCH

7979 OLD GEORGETOWN ROAD SUITE 700 BETHESDA, MARYLAND 20814 (301) 718-0111 (301) 215-4033 fax
EMAIL spri-info@spri.com WEBSITE www.spri.com

An Economically Efficient Regime for Paging Interconnection

John Haring

Jeffrey H. Rohlfs*

April 14, 1999

* John Haring and Jeffrey H. Rohlfs are principals in Strategic Policy Research, Inc., an economics and telecommunications policy consulting firm located in Bethesda, Maryland. Dr. Haring formerly served as Chief Economist and Chief, Office of Plans and Policy at the FCC. Dr. Rohlfs formerly served as Head of Economic Modeling Research at Bell Labs.

Table of Contents

Executive Summary

I. Introduction: Purpose of Paper 1

II. Economic Principles for Efficient Interconnection Policy 3

III. Paging Service and LEC-Paging Interconnection 5

IV. Pricing of Paging Interconnection 11

A. Comparison with CLEC Interconnection 11

B. Applying Principles of Efficient Pricing 14

1. Cost-Causer/Cost-Bearer 14

2. Rewards Reflective of Real Productivity 15

3. Promotion of Efficient Cost Recovery 16

4. Efficacy of Negotiated Arrangements 18

V. Conclusion 20

Executive Summary

Economically-efficient interconnection is a critical component of network competition, but the Common Carrier Bureau's current interpretation of paging interconnection policy does not comport with fundamental principles of economic efficiency, including those which inform the Telecom Act and the FCC's *Local Competition* Order.

Four basic principles should underpin interconnection policy, in general, and paging interconnection, in particular:

- Costs of service should be borne by cost causers and principal service beneficiaries;
- Rewards should be commensurate with productivity;
- Interconnection pricing policies should facilitate efficient pricing mechanisms; and
- Terms and conditions of interconnection should primarily reflect the results of negotiations subject to public-interest guidelines rather than detailed regulatory rules.

The Bureau's current policy interpretation prohibits local exchange carriers from charging paging companies for dedicated facilities used to connect paging carriers to LEC networks. It thus provides paging carriers with strong incentives to demand facilities substantially in excess of the efficient quantities that would be dictated by taking relevant costs into account. Paging companies are demanding lengthy and high-capacity trunks that increase LEC costs and impose burdens on ratepayers and shareholders, neither of whom benefit directly from the interconnection. Reacting *favorably* to a California District Court's dismissal of Pacific Bell's challenge to the California PUC's paging interconnection proposals, the Personal Communications Industry Association's Robert Hoggarth recently noted that, "This decision will have a significant impact on the industry from the practical standpoint and the regulatory standpoint. . . . We're talking *hundreds of millions of dollars, going forward.*" [emphasis added].[1] There is no efficiency or social-welfare rationale for cross-subsidies to paging service of this order of magnitude.

Because paging is a *complement to* rather than a *substitute for* local exchange service, it does not provide any cost savings to the local exchange provider. Rather, like long-distance service, paging calls and connections increase local exchange costs. Like long-distance interconnection, paging interconnection arrangements should provide the correct incentives to select the efficient type and cost of interconnection.

The FCC needs to set new guidelines to promote efficient interconnection for paging. These guidelines should:

- Help align costs and charges so carriers make efficient decisions; and
- Facilitate an efficient structure of rates that confronts paging customers with the interconnection costs their consumption decisions cause to be incurred.

---

[1] *See Telecommunications Reports* (August 18, 1998).

We recommend that the FCC adopt three simple rules:

1. Require paging companies (and all providers of *complementary* services) to pay for the facilities used to connect their customers.
2. Require meaningful negotiation of the terms for interconnection as called for by the Telecom Act.
3. Do not cross-subsidize paging service through higher charges for POTS and other services.

These three rules would go a long way toward satisfying the four general principles enumerated above. They would maximize consumer welfare in the aggregate and provide a framework for efficient interconnection and efficient competition.

I. Introduction: Purpose of Paper

This paper focuses on issues of economically efficient network integration that have been raised by former CCB Chief Richard Metzger's letter (the "ML") regarding interconnection arrangements for paging services.[2] Our analysis is based on a general economic framework for consideration of reciprocal compensation issues in the context of competitive interconnection and delineates the unique issues posed by paging interconnection.

Paging interconnection issues are of particular analytical interest (and practical importance), because the interpretation enunciated in the ML, in essence, prevents economically efficient arrangements. Serious distortions of economic efficiency are virtually certain to occur under this regime. Paging services supply an economic complement rather than a substitute for the services supplied by incumbent and competing local exchange carriers (*i.e.*, ILECs and CLECs). Unfortunately, the ML fails to distinguish between paging services and "competitors" that supply competitive substitutes for local exchange services.

Particularly troubling from an economic standpoint is the ML's conclusion that LECs are prohibited from charging paging carriers for the dedicated facilities used to connect paging carriers to LEC networks. This determination is deeply flawed as a matter of economic principle. It is guaranteed to produce serious economic inefficiencies and adverse distributional impacts among consumers. It also is likely to encourage uneconomic investments in efforts to appropriate benefits through the regulatory process (*viz.*, rent-seeking behavior). The ML interpretation fails to draw relevant economic distinctions among suppliers of economically non-comparable services. It creates an institutional environment that is conducive neither to efficient competition nor to an economically efficient allocation of scarce resources.

More broadly, the idea that paging carriers should be cross-subsidized and permitted to off-load costs on general ratepayers and LEC shareholders is contrary to the Telecommunications Act's economically sensible approach of relying primarily on negotiations to establish economically efficient terms and conditions of interconnection.[3] How can reciprocal compensation (or free

---

[2] *See* letter from A. Richard Metzger, Jr., Chief, Common Carrier Bureau, to Mr. Keith Davis, *et al.*, DA 97-2726 (released December 30, 1997) ("ML").

[3] *See* The Telecommunications Act of 1996, §§ 251 and 252.

services in lieu of reciprocal compensation) be appropriate when there is no reciprocal exchange of traffic? Imposition of transport and termination liabilities on LECs in an operating environment in which there is no reciprocal exchange of traffic and no relevant input substitution is inconsistent with economically-efficient interconnection.[4] If the FCC's rules are to be interpreted in the manner suggested by the ML, there is no meaningful negotiation that can occur between LECs and paging carriers, because there is no trade to be transacted — the ML mandates an outright subsidy to the paging industry in lieu of a negotiated transaction.

Efficient resource deployment requires economically-efficient compensation arrangements. As we detail herein, economic analysis indicates that the best way to achieve efficient results is for paging customers and their economic agents, the paging service suppliers, to bear primary responsibility for recovery of the costs of dedicated facilities utilized to supply paging service. Paging customers are the primary beneficiaries of paging service and the principal cost-causers in economic terms. Paging service suppliers are best positioned to set appropriate charges to recover interconnection costs from customers in an efficient manner. Also, on the assumption that they (and their customers) will bear the costs they cause to be incurred, paging providers would possess economic incentives to design and size their facilities efficiently. If prime beneficiaries and cost-causers do *not* bear relevant costs, that will promote inefficient consumption decisions and leave a cost burden for others (*viz.*, general ratepayers, LEC shareholders, *etc.*) to bear. If costs of providing paging services are to be recovered in charges for POTS or other telephone services, such charges will themselves be distorted with adverse consequences for economic efficiency and distribution. If uncompensated cost burdens reduce returns to equity holders, there will be adverse consequences for network investment.

The paper is organized as follows: We begin with a characterization of the main requirements that a sound economic framework for resolving interconnection pricing issues must meet. We enumerate some basic economic principles, reliance upon which can help ensure that these require-

---

[4] Paging differs in this regard from two-way CMRS services. To be sure, the latter have historically been used primarily, but not entirely, for calls in one direction; *viz*, outgoing. However, recent CMRS pricing plans are certain to stimulate more incoming traffic. For example, Sprint's PCS service allows subscribers to receive calls of up to one minute at no charge. AT&T's recent Digital One service includes a minimum of 600 minutes of use per month, with low charges for additional usage; so incoming calls can be received at low cost — or no additional cost for subscribers having less than 600 minutes of use that month. Paging, on the other hand, is an inherently one-way service.

ments are satisfied. We then turn to the specifics of paging interconnection and evaluate what economically-efficient interconnection entails and contrast that to the ML interpretation. We provide an assessment of the kinds of problems the ML interpretation is likely to pose as the future unfolds and conclude with recommendations for efficiency-enhancing reforms.

II. Economic Principles for Efficient Interconnection Policy

In a competitive regime, the principal focus of regulation should be to develop and enforce a set of interconnection rules that allows the forces of competition to work effectively to maximize economic welfare. The evolution of competition in telecommunications poses a challenging set of pricing and coordination issues, as the delivery of an effective communications capability increasingly requires cooperative behavior among disparate service suppliers. It is important that government interconnection policies not themselves be the source of negative externalities, which undermine efficiency and reduce economic welfare (*e.g.*, by imposing costs on *non*-cost-causers). This is particularly relevant for reciprocal compensation policies that influence economic incentives in powerful and potentially harmful ways. To the extent such policies thwart the operation of salutary negotiation processes, they constitute part of the problem rather than part of the remedy.

In our view, there are four basic principles that should underpin an economically-efficient interconnection regime:

(1) *Costs should be borne by the cost-causers and principal beneficiaries of particular telecommunications services.*[5]

This principle should be applied to end users to the extent that it is feasible and meaningful to do so, *i.e.*, carriers should be treated as agents or intermediaries who pass costs on to their customers. If costs are conceived as the value of foregone alternative resource usage, mis-assignment of paging costs that produces under-charges for paging services and overcharges for POTS, leads to (a) over-consumption of paging services and under-consumption of POTS, and (b) redistribution of economic benefits from general ratepayers and LEC shareholders to paging customers and paging company owners.

(2) *Rewards should be commensurate with productivity.*

---

[5] To the extent that assigning cost recovery responsibility in this fashion itself entails transactions costs, this principle should obviously be honored only to the extent that it is economic to do so.

In the context of network interconnection, the performance of an activity within a specific chain of production is "compensation-relevant" only to the extent that it involves effective *substitution* for economic value added that would otherwise have been supplied by a cooperating carrier. This is simply to say that in an interconnection context the productivity relevant for purposes of (reciprocal) compensation consists of the specific resource savings associated with a shift of responsibility for carrying out a particular activity from one carrier to another.[6] Failure to attune rewards to productivity can spawn an entire industry whose sole purpose is to obtain rewards, while contributing little or no value-added.[7] In the paging context, tying rewards to productivity in this specifically relevant sense is problematical since there is no functional substitution of one carrier's call-handling capacity for another's. To be sure, a paging company may offer its customers added value in terms of paging service sufficient to attract their business, notwithstanding the added costs. Such costs have historically been and are appropriately borne by the principal cost-causers and beneficiaries; *viz.*, paging customers. There is no economic rationale for calling upon general ratepayers, who do not directly benefit, to pay these costs via reciprocal compensation.[8]

(3) *Interconnection pricing policies should be designed so that efficient pricing mechanisms can be utilized and easily implemented.*

---

[6] Competition *means* contesting for the right to meet particular supply requirements. If, in supplying a particular service, a firm does not *substitute* any of its own productive capacity for that of a rival, it is difficult to comprehend in what sense they can be said, meaningfully, to compete with each other.

[7] There is some evidence that interconnection policies are already having that effect. For example, PacWest, a California CLEC, has embarked on a campaign to induce paging and Internet service providers to collocate with it; so it can get reciprocal compensation for their incoming calls. Given that these providers are collocated, PacWest would be providing no value-added beyond PBX functionality and inside wiring in return for reciprocal compensation. An analogous example was the recent scheme by Beehive Telephone Co. to induce large toll users to locate (at least virtually) in its territory in order to generate access revenues (rewards from which were not commensurate with productivity).

[8] The argument that a paging terminal is the functional equivalent of a LEC terminating switch and is thus entitled to equivalent compensation simply misses the point. (*See Reply Comments by Cook Telecom, Inc., et al., in Opposition to Applications for Review*, In the Matter of Requests for Clarification of the Commission's Rules Regarding Interconnection Between LECs and Paging Carriers, March 5, 1998.) The economic issue is not one of equivalence, but of substitution. Where there is no effective substitution and cost savings — as, for example, when an *additional* switching occurrence is interposed — the claim for compensation has no sound economic basis. Reciprocal compensation does not require equal compensation for unequal work. Where an interconnecting carrier provides no effective substitution or cost savings, compensation should not be required (*i.e.*, set at zero). To do anything else would promote inefficiency by breaking the desirable link between reward and productivity.

Efficient pricing mechanisms will embody the first two principles stated above. They economize on scarce information and typically do not require extensive and detailed regulatory intervention for successful implementation.[9]

(4) *Terms and conditions of interconnection should be based on negotiations between/ among the carriers, subject to guidelines that ensure realization of public interest objectives.*

Following the guidance embodied in the Telecommunications Act, the Commission should rely upon general principles rather than attempt to specify detailed rules to guide negotiations. The Act envisions that mutually agreeable terms and conditions of interconnection in the first instance result from business negotiations between interconnecting carriers, with arbitration by state regulatory authorities if need be. Detailed rules will often turn out to be inappropriate in network configurations that differ from those on which the rules are based. To the extent outcomes reflect mandated rules rather than voluntary negotiated agreements, incentives will exist to invest scarce resources to acquire regulatory favor in the form of favorable arrangements. The resources expended in such efforts would represent a deadweight loss to the economy.[10]

This is hardly a startling set of policy guidelines. They would seem uncontroversial and unexceptionable on their face. Indeed, they are, in essence, the economic principles embodied in the Telecommunications Act. Yet their systematic application yields conclusions that are fundamentally at odds with the policy suggested by the ML for LEC-paging interconnection.

III. Paging Service and LEC-Paging Interconnection

We now turn from the general to the specific and focus on economically appropriate arrangements for paging interconnection. The ML's characterization of paging companies as telecommunications carriers does not mean that paging companies should be entitled to get

---

[9] Contrast, in this regard, the complexities (in terms of implementation) involved in attempting to recover NTS costs in per-minute charges compared to simple line charges.

[10] If rights are awarded to carriers independently of productivity, then the predictable consequence will be significant investments to meet the criteria necessary to achieve such status — a classic "signaling" inefficiency. *See* A. Michael Spence, *Market Signaling* (Harvard University Press, 1974). Such resource expenditures do not produce genuine economic productivity in the form of an expansion of output. Instead, they merely redistribute economic burdens to the detriment of the general population of telephone ratepayers whose payments must subsidize such benefits. A world in which "everyone seeks to live off everyone else" might be viable, but would hardly constitute an efficient state of affairs. Policy rules that encourage investments to redistribute rather than enhance wealth encourage wasteful and economically non-productive investments.

telecommunications services and facilities for free. Such a regulatory "free lunch" is particularly anomalous in the context of policymaking with regard to *competitive* network interconnection — the primary focus of the Telecommunications Act. The anomaly, economically speaking, is that paging is a complement to rather than a competitive substitute for local telephone service.

Product market definition is a matter of the degree of substitutability, from the consumer's standpoint, of one service offering for another. Service offerings are normally said to compete only to the extent that customers can readily substitute one for another and would thus display a high positive cross-elasticity of demand in the face of changes in their relative prices.[11] Paging and local telephone services do not qualify as substitutes on this criterion. They supply different services that largely complement rather than substitute for one another.

When customers subscribe to a local telephone service, they acquire the ability to make and receive telephone calls on a particular line. A paging service, in contrast, supplies a subscriber with the means to receive a page. The latter capability may be highly valued in its own right and, as an economic complement to telephone service, may make telephone service more valuable[12] in the same way that service stations make automobile ownership more valuable. But the existence of service stations does not make automobiles less costly to manufacture. Their value to consumers does not provide a rationale for adding a surcharge to the sales price of a vehicle or passing along part of the proceeds from automobile sales to service-station owners.

The essence of competition is rivalrous behavior to induce customers to choose the productive inputs of one supplier over another. When a consumer chooses to purchase a Ford rather than a General Motors automobile, that implies the substitution of Ford's design and manufacturing capabilities and the raw materials Ford has acquired for GM's supply capabilities and its raw materials. When a consumer purchases a paging service, in contrast, that does not typically imply a significant substitution of the paging firm's resource inputs for a LEC's. It is not a matter of MCI Metro or Commonwealth Telecom supplying a functionality *in lieu of* SBC or Bell Atlantic, but

---

[11] This is the essence of the competitive criteria set forth in the Justice Department's Merger Guidelines. *See* U.S. Department of Justice and Federal Trade Commission, "Horizontal Merger Guidelines," *Antitrust Trade Regulation Report*, 1992, No. 1559.

[12] As might any number of goods and services — cordless phones, Roladex files and their electronic equivalent, *etc.*

rather typically a case of a call being delivered to a paging company. Interconnection policy should recognize the differences between different types of carriers.

Long-distance service and the policies that address the integration between local and long-distance services supply an apt analogy. Long-distance service suppliers are telecommunications carriers; yet they are not entitled, as a matter of interconnection policy, to receive reciprocal compensation for completion of calls. If IXCs and LECs were entitled to compensation from one another and reciprocal compensation were required, that would be highly uneconomic for precisely the same reason as for paging; *viz.*, IXCs provide a complement — not a substitute — for LEC services. Instead, under the FCC's existing policies each LEC and IXC recovers remuneration for its productivity contribution to call completion in specific charges for long-distance calling and for provision of access. Note, in particular, that long-distance service suppliers' status as "carriers" does not qualify them for *free* interconnection of whatever sort they deem suitable.[13]

Paging terminations often occur at end offices typically using DID with calls rated to the specific terminating end office (*See* Figure 1).[14] This is known as Type 1 interconnection. The costs of interconnecting paging companies via Type 1 interconnection are significantly greater than the costs of interconnecting other types of carriers, notably CLECs. In contrast to CLECs, paging carriers obtain telephone numbers (from the LEC) that reside in a particular LEC end office as well

---

[13] Similarly, other providers of complementary electronic services (*e.g.*, audio-text and alarm companies) should not be entitled to free (telephone) services and facilities — even if they reconstitute themselves so as to qualify for carrier status.

[14] This figure shows the usual case in which the originating and terminating end offices differ, and the (local) call does not go through a tandem switch. Our analysis and results about Type 1 interconnection would apply equally if the call originated and terminated at the same end office or if the call were switched at a tandem office (as well as at the originating and terminating end offices).

as facilities that connect end offices to paging equipment.[15] Virtually no other carriers interconnect in this way.[16]

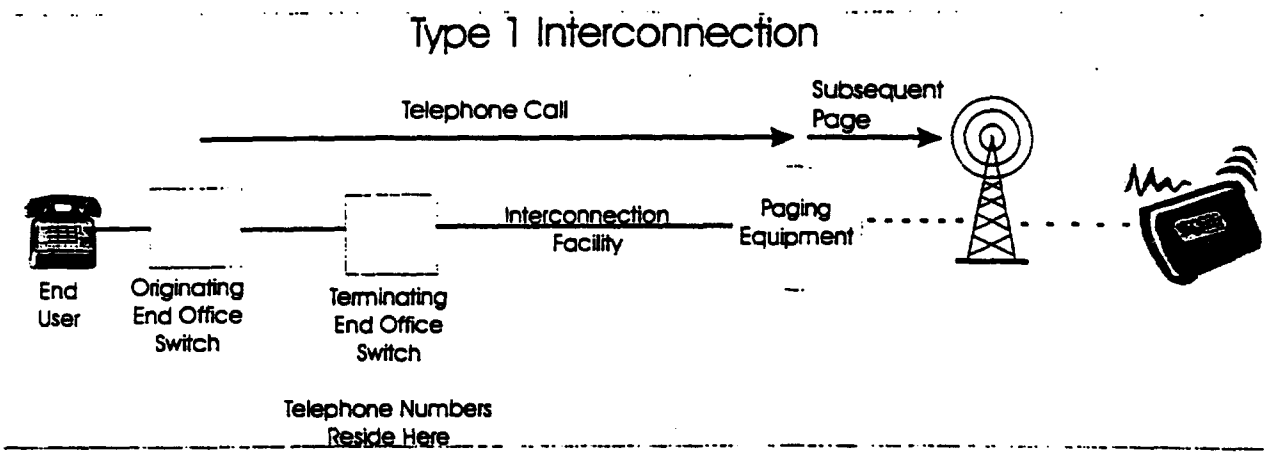

Figure 1

While LEC costs are greater because of the different facilities and call-processing requirements, these costs can only be recovered from charges for POTS, toll and other LEC services. Note that none of these incremental cost burdens are *offset* by reduced call-handling costs as would normally occur when a CLEC *substituted* its call-handling capacity for a LEC's. Type 1 interconnection entails *added* costs.

The policy encapsulated in the ML is even more egregious where a paging company uses FX-like arrangements, which are quite common. (*See* Figure 2). In this case, the paging equipment is not in the same local calling area as the terminating end office. Providing interconnection of this type is *far* more costly than providing interconnection to CLECs. Additional costs are incurred at both wire centers, in addition to the costs of dedicated interoffice transport. There are many locations where paging companies are using interexchange DS-1 facilities with lengths of over 40

---

15 Paging companies are generally more costly to serve than other carriers because of the short duration of their calls. Consider the following example: Assume that a paging company with 100 lines probably has about the same rate of line utilization (minutes of use per line per month) as a mail-order company with 100 lines (so as to provide the same frequency of blocked calls). However, calls to paging companies are of much shorter duration. Consequently, the paging company receives far more calls than the mail-order company. These additional calls involve additional set-up costs that are borne by the ILEC.

16 Our understanding that there is a relatively small amount of cellular interconnection that occurs in this manner, but that generally is *de minimus* or is being phased out.

miles and tariffed rates of thousands of dollars per month. Application of the ML could, however, imply that all of these costs should be borne by the LEC.

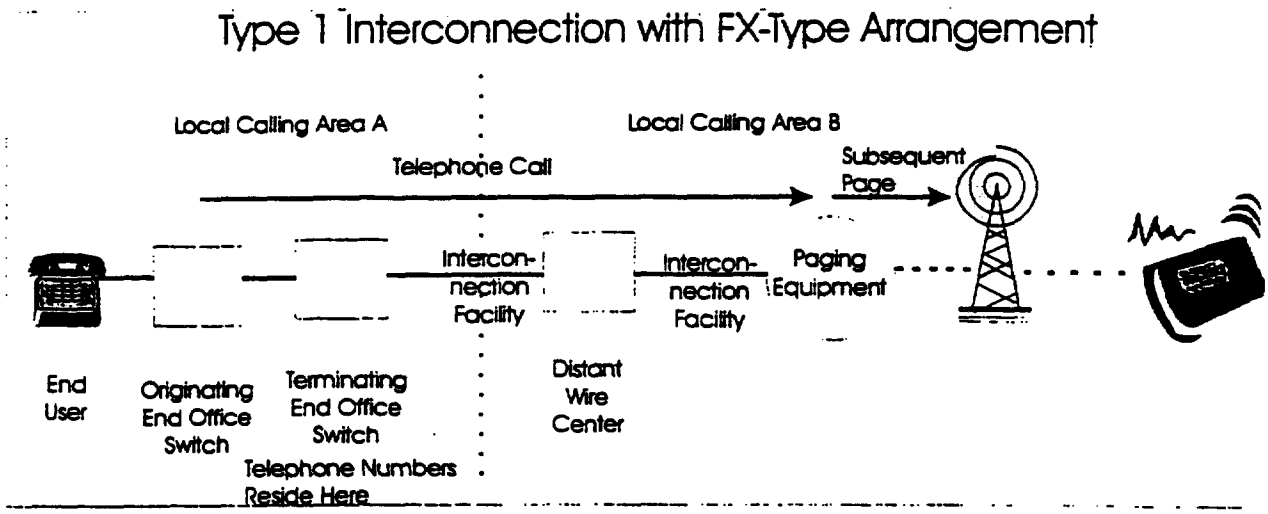

Figure 2

Paging terminations also occur occasionally at tandem offices (rather than at end offices as is more often the case) using NXX with calls rated as per the location of rating point for an NXX. (*See* Figure 3).

It may be in the LEC's interests to try to induce Type 2 interconnection where it is less costly. One would anticipate attempts to provide price incentives in negotiations for adoption of this type of interconnection where there are cost savings relative to Type 1 interconnection. Paging companies sometimes attempt to bootstrap the assertion that Type 2 interconnection is comparatively less costly than Type 1 into an argument for receiving compensation. That argument has no sound economic basis, however, since no paging-company value-added substitutes for ILEC value-added. Hence, there is no economic justification for any reward.

Costs of paging interconnection, even using Type 2 interconnection, are quite high. In particular, the cost per minute for paging calls substantially exceeds the cost per minute of standard calls because paging calls are usually of short duration; so the costs of setting up the call are spread over fewer minutes. Another reason is the cost of the dedicated facility. Different cost models might yield different numerical results, but we believe that (because of the shorter average duration) any reasonable estimate of the per-minute costs of paging interconnection would substantially exceed

the estimated per-minute costs of a standard call. Thus, even a paging company that uses Type 2 interconnection *imposes* significant costs on the ILEC. On a per-minute basis, the imposed costs substantially exceed the costs of standard calls.

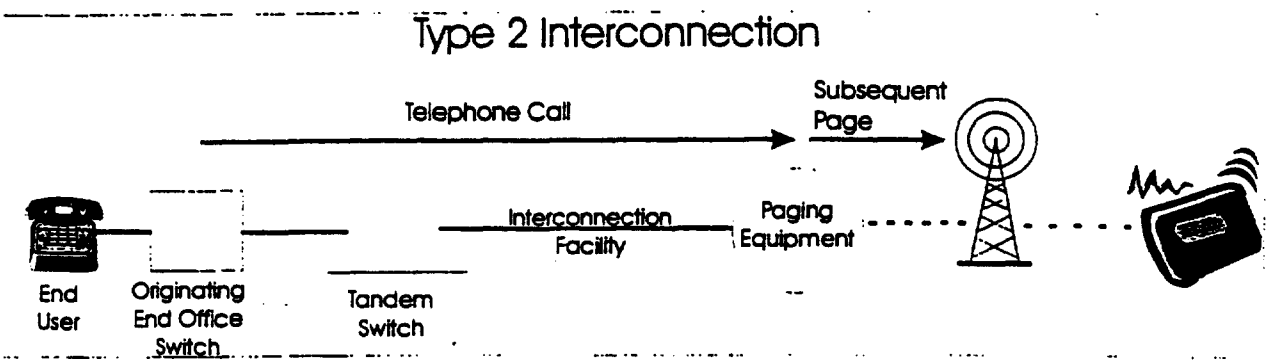

Figure 3

To summarize, the ILEC's cost of serving a paging company that uses Type 1 interconnection is greater than the cost of interconnection between competing LECs — especially if FX-like arrangements are used. Type 2 interconnection may, in certain circumstances, be less costly than Type 1 interconnection. In any event, paging carriers, unlike CLECs, do not provide any significant value-added that substitutes for the value-added that would otherwise be provided by an ILEC. Consequently, there are no reasons for affording paging companies special treatment in the form of free interconnection facilities and compensation for call termination. Negotiated agreements could be expected to give appropriate incentives for deployment of Type 2 Interconnection where it is cost-effective.

Giving free service and facilities to paging companies involves an outright cross-subsidy. In particular, the ILEC and its customers (general ratepayers) subsidize paging companies and their customers. The latter group makes decisions to acquire interconnection facilities and reaps most or all of the benefits deriving therefrom. The former group bears the cost and derives minimal (if any) benefit therefrom. These are precisely the defining characteristics of economic cross-subsidy.[17] Provision of some customer access lines (*viz.*, basic connectivity that affords the option of making and receiving calls) is subsidized on universal service grounds; it is impossible to justify general

[17] *See* Gerald Faulhaber, "Cross-Subsidization: Pricing in Public Enterprise," *American Economic Review, December*, December 1975, at 966-977.

cross-subsidization of paging facilities that simply afford specific customers the option of receiving pages (on a selective basis at that) on such grounds.

One other adverse consequence of an interconnection regime that is uneconomically skewed toward the consumption of paging services is worth highlighting. We have noted that consumption of services whose prices must be higher to support cross-subsidies of paging service will be uneconomically restrained below efficient levels. In addition, uneconomically low rates for paging service will also discourage development and consumption of paging substitutes (*e.g.*, two-way CMRS). These services are rendered relatively more expensive from the consumers' perspective and relatively less profitable from an investment perspective since demand is reduced compared to a subsidy-free environment.

IV. Pricing of Paging Interconnection

A. Comparison with CLEC Interconnection

In an earlier paper,[18] we developed a framework for evaluating local interconnection pricing, applying economic analysis to the particular circumstances of local interconnection and examining several alternatives for governance of interconnection pricing. Our economic framework focuses on productive efficiency in call processing in a competitive regime and examines ILEC cost savings resulting from facilities-based CLEC entry. It considers cost savings associated with provision of loops, central office connections and handling of calls that result from *substitution* of CLEC *for* ILEC performance of specific functional tasks. There are conceivable settings wherein a CLEC's offering will significantly reduce the resources the ILEC needs to deploy. When the calling and called party are served by different ILEC central offices and the CLEC serves a large geographic area, the ILEC may experience substantial cost savings associated with call handling if it needs to switch the call only once and does not need to transport the call from one central office to another. These cost savings are over and above any savings in loop costs and connection costs.

One policy implication of our earlier work is that economically efficient reciprocal compensation should vary depending on the extent to which the work performed by one carrier

---

[18] *See* John Haring and Jeffrey H. Rohlfs, "Telecommunications Pricing and Competition," in G.L. Rosston and D. Waterman (eds.), *Interconnection and the Internet* (1997), at 33-47.

effectively substitutes for work the other might otherwise perform. Thus our analysis supports the efficacy of the approach that has been adopted in most states where reciprocal compensation varies depending on where a call is passed off for completion. Higher compensation is paid the sooner the call is passed along (*viz.*, at a tandem office rather than the terminating end office). Another important implication is that symmetrical compensation, notwithstanding substantial differences in productive contributions, provides incentives for interconnecting service providers to do less work. This is fundamentally at odds with the goals of the Telecommunications Act, which are to promote maximum feasible competition. If competitors can achieve comparable rewards regardless of whether they add a lot or a little value, their incentives will obviously be to add as little value as possible consistent with obtaining the specified rewards. Promotion of facilities-based competition requires that incentives be properly scaled to afford greater rewards for greater productivity and larger investments in deployment of facilities.

Our earlier analysis focused specifically on the effects of genuine competition that involves competitively-driven *substitution* of one carrier's capabilities for another's. Such competition alters the distribution of productive resources contributed by competing/cooperating carriers in processing calls. Some types of CLEC competition may have only minimal impact on the resources an ILEC may have to deploy to complete a call. In these circumstances, the value added by the CLEC is minimal and the appropriate remuneration is comparably small, both in absolute terms and relative to the remuneration that the ILEC should receive when it performs the bulk of the work.

We review this analysis here because it is pertinent to the issue of paging interconnection. As we have seen, paging service is, in actuality, an economic complement rather than a substitute for (and competitor to) local telephone service. As such, paging service suppliers typically do not supply functionalities that *substitute* for those which an ILEC supplies in terms of call handling. They are, in essence, a "CLEC" that does not compete — a contradiction in terms, the import of which is that no compensation-relevant, competitive input substitution occurs.

There are, in reality, a variety of different types of carriers: some add little value in terms of call completion (*cf.* pure resellers), some add a lot (*cf.* a facilities-based CLEC), others such as long-distance carriers supply services that are complements rather than substitutes for LEC functionalities. Like long-distance carriers, paging carriers supply a service that is complementary to LEC service. Given the differences among different types of carriers, regulatory policy needs to permit variations

to reflect relevant differences in terms of effective substitution of one carrier's call-handling capacity for another's. One size will not fit all, as most states have recognized in setting CLEC compensation so as to vary to reflect differences in the switching point where a call is passed along for completion. In the case of complementary services, such as long-distance and paging, there is no basis for reciprocal compensation based on input substitution.

Rather than enabling a LEC to save costs in terms of call handling, interconnection to paging carriers entails higher costs. As a complement rather than a substitute, paging services do not compete for any LEC activity involved in the processing of local telephone calls. There is, consequently, no economic justification for LEC compensation to paging companies for call completion services. The activities of paging companies, unlike those of CLECs, do not generally substitute for ILEC activities. On the contrary, paging companies provide value-added over and above, and largely not overlapping with, the value provided by LECs. Under these circumstances, the notion that paging companies are entitled to any kind of reciprocal compensation or free interconnection facilities cannot be economically justified.[19] To the contrary, these policies would place additional cost recovery burdens on non-cost-causers, encourage uneconomic consumption of paging substitutes, and depress LEC earnings and investment if costs are not recovered. If LECs are not permitted to recover costs of supplying paging carriers interconnection facilities free of charge in charges for other services, the burden of cost recovery will fall to returns on stockholders' equity. Reduced returns will deter otherwise cost-effective investments in network infrastructure.

How then should the costs of paging interconnections be recovered? The ML would apparently have the LECs recover such costs in service and call charges of various sorts levied on the general population of network users (*i.e.*, general ratepayers). Application of the guideline principles we enumerated earlier suggests that this approach is uneconomic and does not represent sound policy.

---

[19] We note that at least one state (California) requires such economically unjustified compensation. The FCC could perhaps deter this kind of error by adopting regulations that interprete Section 251(b)(5) that explicitly exclude carriers from recovering compensation for added costs.

B. Applying Principles of Efficient Pricing

1. Cost-Causer/Cost-Bearer

The costs of telephone calls are caused by the people communicating with each other via a call — the calling and called parties. By convention, calling parties typically pay for calls they initiate except where other billing arrangements have been made (*e.g.*, 800 service). This convention may reflect the fact that called parties do not always wish to receive all calls they receive (*cf.* telemarketing calls at dinner time), whereas call initiators almost always wish to complete a call or they presumably would not have initiated it.[20] In the case of paging, the notion that the called party may not wish to receive a particular page is obviously more difficult to sustain. The *purpose* of purchasing a paging service is precisely to enable the reception of pages. In this case there is thus less presumption in favor of the traditional convention that the calling party is the primary beneficiary of the call. Moreover, people making calls to paging services have usually been empowered to do so as a result of the paging customer's having made their number available on a selective basis.

Paging customers decide who gets their number. They control distribution of their number. Even if regulation permitted recovery of these costs from general ratepayers, it is difficult to fathom how a person who is not capable of calling a paging customer, given selective availability of paging numbers, can benefit in such a manner as to warrant paying higher charges for POTS or other LEC-supplied services to support free provision of interconnection facilities to paging services.

Generally speaking, calling parties do not pay for the called party's network connection. That connection is necessary to complete a call, but is not, economically speaking, part of the *cost* of a call. It is rather a cost associated with the decision to procure an access line which gives the *option* of making and receiving calls. The costs of supplying an access line that has been ordered are, in fact, incurred regardless of whether any calls traverse the path (*i.e.*, they are quintessentially non-traffic-sensitive — NTS — costs).

The cost-causers and the beneficiaries of paging service are the callers and the persons who receive paging calls. Together, they rather than general telecommunications customers thus should — on bedrock economic principle — bear the costs of paging interconnection. As in the case of

---

[20] Sometimes people place or return calls at times when they estimate the called party will not be available and, via this ploy, avoid communication while having fulfilled an implicit obligation (*viz.*, to return a call).

access lines, the access trunks that connect the paging company to the LEC are NTS costs — so long as the paging company determines the number of trunks. In that case, the trunks are provided because the paging company orders them — regardless of whether they are necessary (in a traffic-engineering sense) to handle the traffic. Provision of such trunks is not caused by calls to pagers and is not attributable to any activity by general telecommunications customers. It derives solely from paging companies' desire (for whatever reason) to have a certain number of trunks.[21]

Because these costs are not part of the costs of making any call, they should not be embodied in call charges that are properly designed to recover call-processing costs. Were such costs included in charges for completion of all telephone calls, the economic effect would be to distort prices and bias consumption decisions inefficiently, and to redistribute income from general ratepayers to paging customers. This cross-subsidy is exacerbated to the extent that paging calls are incremental and network call-handling capacity must be greater and charges for telephone service greater to recover the added costs of handling these calls.

The costs of the paging network itself (including its network connection) are most efficiently borne by the paging customer. The customer chooses the paging company and should, therefore, be responsible for the costs resulting therefrom. We note also that in the case of paging service there is no economically compelling universal service rationale for socializing interconnection costs in the rates general telecommunications customers pay for basic telephone service. Indeed, paging numbers are usually not universally available — paging services produce benefits for subscribers and those to whom they wish to make their paging number available.

2. Rewards Reflective of Real Productivity

As we have stressed, paging services are primarily a complement to ILEC services. In contrast, CLECs generally provide value-added that substitutes for value-added that would otherwise be provided by an ILEC. Also, many (but not all) two-way CMRS calls displace calls that would otherwise be carried on the ILEC's wireline network, perhaps prior to subsequent travel. Paging services may meet a consumer demand, but do not perform call-processing functions a telephone

---

[21] Access trunks would, however, be TS costs if the LEC determined, on the basis of estimated traffic, how many trunks the paging company needed. Under these circumstances, it would still be appropriate to charge the paging company for the costs (because the paging company and its customers cause the costs), but the charges should depend on usage.

company would otherwise perform. The value a paging service produces does not consist of a telephone company cost saving, but rather the utility consumers of paging services derive from the service. That productivity should be rewarded/compensated by the consumers who benefit from it rather than subsidized through inflated charges for the services telephone companies supply. To compensate paging carriers for cost savings they do not produce is economically unjustified. Paging interconnection does not reduce LEC call-handling costs; it raises them compared to other types of calling. This should not provoke a reward.

3. Promotion of Efficient Cost Recovery

As we have noted, one of the adverse consequences of recovering costs incurred by paging customers in charges for services paid by *other* customers is that this promotes inefficient consumption decisions (*viz.*, under-consumption of taxed services (POTS) and over-consumption of subsidized paging services). Relatedly, a sensible interconnection pricing policy would be one that consciously sought to assign cost-recovery responsibility in a manner that lends itself to efficient cost recovery.

The problem of recovering NTS paging interconnection costs is analogous to the problem of recovering customer access line costs. As the Commission is well aware, it is not easy, even in simple mechanical terms, to determine the appropriate usage charge that will approximate the revenues required to meet any given access burden. Relevant burdens need to be identified and estimates of demand and repression effects must be made, and true-ups are often required. Usage charges are, in any event, less efficient than fixed charges since they distort consumption decisions at the margin. This problem is exacerbated by paging interconnection policies that increase the cost recovery burden by misassigning costs of paging interconnection facilities for recovery in charges to general ratepayers and imposing paging call termination charges on LECs.

The thrust of the Commission's various access charge revisions has sensibly been to try to reduce the magnitude of such burdens through greater direct assignment of NTS costs and to move away from economically inefficient usage-based charges. It is thus ironic that ML's paging interconnection policy heads in precisely the opposite direction. That policy moves away from direct assignment of NTS costs and puts upward pressure on call charges given the LEC's limited flexibility to increase fixed service charges.

We find it impossible to square the ML's interpretation as regards paging interconnection pricing with the Commission's access pricing policies. Consider the Commission's discussion of general rate structure rules in its Interconnection *Order*:[22]

> We conclude, as a general rule, that incumbent LECs' rates for interconnection and unbundled elements must recover costs in a manner that reflects the way they are incurred. This will conform to the 1996 Act's requirement that rates be cost-based, ensure requesting carriers have the right incentives to construct and use public network facilities efficiently, and prevent incumbent LECs from inefficiently raising costs in order to deter entry . . . . [W]e require that the charges for dedicated facilities be flat-rated, including, but not limited to, charges for unbundled loops, dedicated transport, interconnection, and collocation. These charges should be assessed for fixed periods, such a month. We are requiring flat-rated charges for dedicated facilities. Usage-based charges for dedicated facilities would give purchasers of access to network elements an uneconomic incentive to reduce their traffic volumes. Moreover, purchasers of access to network elements with low volumes of traffic would pay below-cost prices, and therefore have an incentive to add lines that they would not add if they had to pay the full cost. As stated in the NPRM, a flat-rated charge is most efficient for dedicated facilities, because it ensures that a customer will pay the full cost of the facility, and no more.

Since virtually everyone agrees this is good policy for pricing in the context of access, how can the policies reflected in the ML constitute sound policy? These would entail trying to recover NTS costs for dedicated facilities used to supply paging services from the general population of telephone users. Such charges would likely be access and toll charges to a significant extent given the difficulty of raising charges for local telephone service.

It is not easy for a LEC to determine the appropriate usage charge that will approximately recover the interconnection costs from callers to paging systems. And a usage charge would, in any event, be less efficient than a fixed monthly charge. In contrast, paging companies are in a good position to set appropriate charges to recover interconnection costs from their customers in an efficient manner. In particular, the rate structures they offer could include fixed monthly charges as

---

22 *See First Report and Order*, In the Matter of Implementation of the Local Competition Provisions of the Telecommunications Act of 1996, August 8, 1996, at 358-59.

well as usage charges. One can easily conceive of a variety of service plans embodying different mixes of charge types to appeal to different paging customer preferences.

We thus conclude that the best public policy from the standpoint of *enabling* efficient cost recovery would be to require paging companies to bear NTS interconnection costs. The paging companies may then pass them along to their customers (the cost-causers) in a much more efficient manner than they could be collected through general charges for telephone calls and service. In this manner, the Commission's enlightened approach to structuring access charges would be translated to the paging venue.

4. Efficacy of Negotiated Arrangements

The Telecommunications Act of 1996 dictates that terms and conditions of competitive interconnection be based on negotiations between ILECs and CLECs subject to arbitration by state regulatory authorities. As we have noted, under the ML's interpretation of the FCC's rules, paging companies would not have to pay for the facilities that interconnect them to local exchange carriers. The ML interpretation thus renders negotiations largely pointless. By mis-assigning rights, the ML interpretation has created a situation where there is little if anything to negotiate. Normally, buyer and seller negotiate over what specific goods are to be delivered and the prices that are to be paid. The ML implies that buyers should be able to decide what they want and receive it without paying — hardly a setting conducive to normal business negotiations.

A negotiation generally involves attempts to identify mutually advantageous trades and, in particular, to specify what is to be exchanged for what. The ML's interpretation implies that paging companies are to receive interconnection facilities without having to pay for them. It specifies a particular result with respect to what would obviously be principal aspects of any real negotiation.

Under the ML interpretation efficient outcomes are likely to prove impossible to achieve. In particular:

- With a zero price, if the paging company is permitted to decide which interconnection facilities it obtains, it possesses an obvious incentive to order far more capacity (along any relevant dimension) than the efficient amount (*i.e.*, the amount that equalizes marginal costs and benefits). For example, to ensure that no calls ever get blocked, it is likely to order excessive trunk capacity. Essentially, ILECs would

be called upon to write a blank check and paging companies would fill in the amount. Such an arrangement seems wholly untenable.[23]

- With a zero price, if the ILEC chooses the level of interconnection capacity, it will be held to service-quality standards, but even so, it may not properly take into account the cost (to paging customers) of blocked calls. In any event, the ILEC cannot be expected to forecast traffic loads for a particular paging company at all precisely (to determine the appropriate capacity).

The problem with specifying a zero price is that it largely removes the price mechanism as a tool negotiating partners can use to provide incentives to economize on demands and elicit expanded supplies. Instead, it leaves the resolution of economically and technically complex supply provisioning issues to the government, which is not especially well equipped to resolve them efficiently.

We also earlier remarked that when a paging carrier connects to the network at a tandem, there may or may not be cost savings relative to connecting at the terminating end office. Where such interconnection is cost effective, a LEC may wish to provide incentives to paging companies to interconnect at tandem switches rather than at end offices. With a zero price, how is the LEC to impart such an incentive effectively? In a normal business negotiation setting, the LEC might propose to offer to share any cost savings in the form of a discounted interconnection charge, thereby providing an inducement to implement the less-costly form of interconnection.

The problem in this case is that, under the ML there is no charge to be discounted and thus no interconnection pricing method to provide the correct incentives. Given the way rights are currently defined, the only way for LECs to impart efficient incentives to paging companies is to provide financial inducements directly. But this creates a problem in that it provides incentives for strategic behavior and it is not clear how such a contract could be enforced. With rights as currently defined, the prospect of financial inducements would lead paging companies to exaggerate their capacity requirements greatly in an attempt to maximize the prospective payoff designed to induce a shrinkage in requirements and more efficient arrangements. By the same token, were the rights assignment reversed, LECs would possess incentives to understate what they would willingly supply

---

[23] We have been apprised of instances where SBC LECs were asked to supply large-capacity (including, in one instance, an OC-12) interconnection facilities significantly in excess of expected traffic volumes.

in the absence of an inducement to maximize their potential payoff. By insisting on a zero price, the regulator puts parties in a position where problematic side payments are necessitated to elicit more efficient outcomes and, depending on how rights are assigned, encourages posturing about requirements and capabilities as a tactic to maximize payoffs.

These problems of efficient facilities deployment largely did not arise under the *status quo ante* where paging carriers decided which facilities to purchase and paid the rates for these facilities that were generally established under the auspices of state Commissions. There was no "externalization" of costs burdening other network users under this "voluntary exchange" paradigm. This approach can supply a workable means for negotiated discounts to impart incentives for more efficient forms of interconnection.

V. Conclusion

Economic principles suggest that an efficient paging interconnection regime should recover costs from paging customers and their economic agents, the paging companies. This assignment of responsibility for cost recovery places burdens squarely on cost-causers who exercise the critical consumption and economizing decisions and are in a position to implement efficiently structured charges. It avoids imposing cost burdens unfairly and inequitably on general telecommunications customers whose rates must necessarily be higher if paging interconnection costs are allowed to be externalized/socialized. And it would provide an institutional setting in which negotiations could effectively impart incentives to adopt technically efficient methods of interconnection. The ML interpretation promotes economic inefficiency and mal-distribution of economic benefits. It entails outright cross-subsidy to paging companies and their customers from ILECs and general ratepayers.