defined alternatives may be found. Examples of potential alternatives may be: Service Class Routing, Dial Pulse Address Signaling, and Cut Through.

Signaling

Signaling arrangements extend trunk circuit or signaling circuit alerting information on metallic or fiber facilities from one customer premises location to another customer premises location. These signals are the means by which the end user initiates a request for service, holds a connection or releases a connection. The signaling arrangements can be terminated on line-like or trunk side interfaces of the LEC switch. Examples of point-of-termination supervisory signaling arrangements that may be ordered are Multi-Frequency (in-band), Signaling System 7 (SS7) (out of band), reverse battery and E&M.

Transmission

The subject of transmission covers a broad range of performance considerations related to the physical facilities that compose network architecture. Transmission parameters are designed to provide objective transmission performance characteristics, as perceived by the end user and LEC, between the points of termination. Transmission parameters are defined for each Network Interface (see below) supporting this BSA. These parameters are defined in the reference documentation.

Network Interfaces

The electrical and physical interface with the LEC is described by a Network Channel Interface (NCI) code for each end user termination and each service provider termination. NCI codes are provided to aid the user in understanding the relationship of the network interface to the electrical or optical characteristics of the interface. NCI codes have four basic components: (1) number of conductors (wire or fibers), (2) protocol code, (3) nominal reference impedance code, and (4) any applicable protocol options.

References

- GR-334 Switched Access Service: Transmission Parameter Limits and Interface Combinations, Issue 1, June 1994
- TR-TSY-000698 Feature Group B FSD 20-24-0300, Issue 1, June 1989, Rev. 1, July 1990
- LSSGR FR-64 (formerly FR-NWT-000064), GR-690, FSD 20-24-0000, Exchange Access Interconnection, Issue 1, March 1991, Issue 2, September 1995, Revision 01, October 1996
- TR-NPL-000258 Compatibility Information for Feature Group D Switched Access Service, Issue 1, October 1985.
- SR-NPL-001321 Connection Setup Time for Feature Group D and Termination Feature Group B, Special Report, Issue 1, February 1989.
- Ameritech reference: AM TR-TMO-000094 Switched Access Service Feature Group D, August 1992. (Written as a companion document to TR-NWT-000334, Switched Access Service: Transmission Parameter Limits and Interface Combinations.)

References for SS7

- GR-905 Common Channel Signaling Network Interface Specification (CCSNIS) Supporting Network Interconnection, Message Transfer Part (MTP), and ISDN User Part (ISDNUP), Issue 2, Rev01 - December 1997, Rev02 – December 1998 (replaces TR-TSV-000905)

- GR-394, Switching System Generic Requirements for Interexchange Carrier Interconnection Using the Integrated Services Digital Network User Part (ISDNUP) (A module of LSSGR FR-64), Issue 2, December 1997, Rev01 – November 1998 (replaces TR-NWT-000394)

References for Signaling Arrangements

- TA-NPL-000912 Compatibility Information for Telephone Exchange Service, Issue 1, February 1989.
- SR-2275 Bellcore Notes on the Networks, Issue 3, December 1997 (replaces SR-TSV-02275, Issue 2)

2. Category 2 - Packet Switched Basic Serving Arrangement

A packet switched BSA provides an ESP with a connection to the packet switched network via virtual and permanent virtual circuit connections. This BSA is capable of supporting analog or digital signals of various transmission rates. The transmission interface may be 2-wire or 4-wire, or derived from a variety of multiplexing alternatives (for example, Digital Signal (DS) level 0 from DS level 1, or DS1 from DS3).

2.1 Category 2, Type A - X.25 Packet Switched BSA (1001)

Service Description

The Type A Packet Switched BSA provides an ESP with X.25 or X.31 access to the BOC packet switching network via virtual and permanent virtual circuit connections. This interface conforms to Recommendations X.25 and X.31 of the International Telecommunication Union-Telecommunication Standardization Sector (ITU-TS) (formerly the International Telegraph and Telephone Consultative Committee [CCITT]).

X.25 includes physical, link and packet level procedures. At the physical level, data signaling rates of 1.2, 2.4, 4.8, 9.6 and 56 kbps are supported. The link level protocol supported at the interface is Link Access Protocol Balanced (LAPB). The main functions of the link level protocol are to ensure that the packets cross the Data Terminal Equipment/Data Communications Equipment (DTE/DCE) interface essentially error free and reach their destination in a correctly transmitted sequence. The network level access protocol provides the procedures required to set up, maintain and clear virtual calls. X.31 defines the recommended procedures for using Q.931 protocol to establish digital customer premises equipment (CPE) calls to a packet network in accordance with defined bearer services.

Generic Name of BSA	Regional Company BSA Name
Category 2, Type A - X.25 Packet Switched BSA	AM - Packet Switched Network Service (X.25)
	BA - Public Data Network: X.25
	BS - PulseLink® Packet Switching - X.25
	NX - INFOPATH® Packet Switching Service
	PB - Public Packet Switching (X.25)
	SWB - Packet Switched - MicroLink II℠ (X.25 Version)
	USW - Packet Switching (X.25)

® PulseLink is a registered trademark of BellSouth.

® INFOPATH is a registered service mark of NYNEX.

℠ MicroLink II is a registered service mark of Southwestern Bell Telephone.

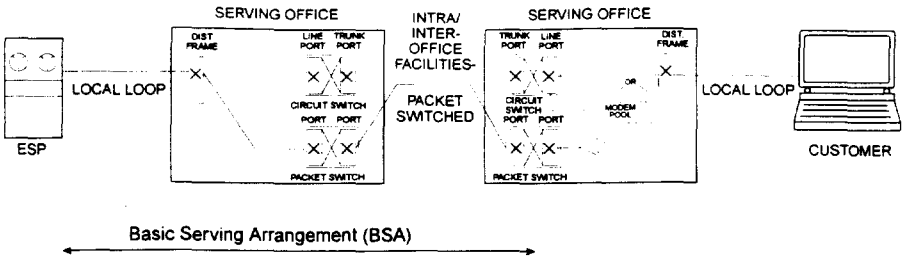

Alternatives

An alternative is an item that must be selected for the BSA to be technically meaningful. Alternative items may be available from some or all of the Local Exchange Carriers (LECs). Refer to the individual LEC tariff reference diskette for the reference information where LEC defined alternatives may be found. Examples of potential alternatives may be: Logical Channel, Flow Control Parameters, and Multiple Network Addresses.

Signaling

Signaling arrangements extend alerting information on metallic or fiber facilities from one customer premises location to another customer premises location. Dial (circuit-switched) access provides low- to moderate-throughput Public Packet Switched Network (PPSN) access through the voice telephone network. With dial-in access, a customer terminal and modem are attached to the Public Switched Telephone Network (PSTN) loop. The customer dials a North American Numbering Plan (NANP) address and the PSTN routes the call to a PPSN dial-up port. The PPSN answers the call with a modem supporting one of several modem protocols.

With dial-out access, a call is routed to a PPSN interface supporting dial-out service. At this interface, the access concentrator obtains the NANP address and uses the ITU-TS (formerly CCITT) V.25 calling procedures to instruct the PPSN modem to establish a physical connection with the customer via the PSTN.

Dedicated (nonswitched) access provides the customer with continuously available interfaces to the PPSN.

Transmission

The subject of transmission covers a broad range of performance considerations related to the physical facilities that compose network architecture. Transmission parameters are designed to provide objective transmission performance characteristics, as perceived by the end user and LEC, between the points of termination. Transmission parameters are defined for each Network Interface (see below) supporting this BSA. These parameters are defined in the reference documentation.

Network Interfaces

The electrical and physical interface with the LEC is described by a Network Channel Interface (NCI) code for each end user termination and each service provider termination. NCI codes are provided to aid the user in understanding the relationship of the network interface to the electrical or optical characteristics of the interface. NCI codes have four basic components: (1) number of conductors (wire or fibers), (2) protocol code, (3) nominal reference impedance code, and (4) any applicable protocol options.

References

- GR-301 Public Packet Switched Network Generic Requirements (PPSNGR) (replaces TR-TSY-301, Issue 2), Issue 2, December 1997
- TR-NPL-000011 Asynchronous Terminal and Host Interface Reference, Issue 1, March 1985
- Ameritech TR-NPL-000001 Public Packet Services Technical Interface Specifications, Issue 2, September 1988
- Ameritech TR-NPL-000002 Technical Interface Specifications for X.25 Service, Issue 2, May 1988
- Ameritech TR-NPL-000003 Technical Interface Specifications for Asynchronous Service, Issue 2, May 1988
- Ameritech TR-NPL-000007 Digital Service Interface Specifications, Type 1, Issue B, December 1988
- Bell Atlantic TR 72211 Interface Specification For The Bell Atlantic Public Data Network, Issue C, December 1991
- BellSouth TR-73513 PulseLink® X.25 Interface Specification, Issue A, June 1987
- BellSouth TR-73516 PulseLink® Physical Interface Specification, Issue C, September 1991
- NYNEX NTR-74250 INFOPATH® Packet Switching Service X.25 Interface Specification, Issue 2, January 1988
- NYNEX NTR-74252 INFOPATH® Packet Switching Service Asynchronous Interface Specification, Issue 2, January 1988
- Pacific Bell PUB L-780060-PB Public Packet Switching (PPS) - Technical Interface Specification, Issue 1, August 1989
- Southwestern Bell Telephone Technical Publication TP 76800, MicroLink II℠ X.25/X.75 Reference, Issue 4, September 1994
- U S WEST USWTR 77359 DIGIPAC® Service Interface Specifications For Public Packet Switching Network, Issue E, May 1994

® PulseLink is a registered trademark of BellSouth.

® INFOPATH is a registered service mark of NYNEX.

℠ MicroLink II is a registered service mark of Southwestern Bell Telephone.

® DIGIPAC is a registered service mark of U S WEST.

2.2 Category 2, Type B - X.75 Packet Switched BSA (1002)

Service Description

The Type B Packet Switched BSA provides an ESP with X.75 access to the BOC packet switching network. The X.75 interface conforms to Recommendation X.75 of the International Telecommunication Union-Telecommunication Standardization Sector (ITU-TS) (formerly the International Telegraph and Telephone Consultative Committee [CCITT]).

X.75 includes physical, link and packet level procedures. At the physical level data signaling rates of 9.6 kbps are supported over analog or digital facilities. Speeds of 56 kbps are supported over digital facilities only. The link level protocol supported at the interface is Link Access Protocol Balanced (LAPB). The main functions of the link level protocol are to ensure that the packets cross the network interface essentially error free and reach their destination in a correctly transmitted sequence. The network level access protocol provides the procedures required to set up, maintain and clear virtual calls.

Generic Name of BSA	Regional Company BSA Name
Category 2, Type B - X.75 Packet Switched BSA	AM - Packet Switched Network Service (X.75) BA - Public Data Network: X.75 BS - PulseLink® Packet Switching - X.75 NX - INFOPATH® Packet Switching Service PB - Public Packet Switching (X.75) SWB - Packet Switched - MicroLink II℠ (X.75 Version) USW - Packet Switching (X.75)

Packet Switching BSA

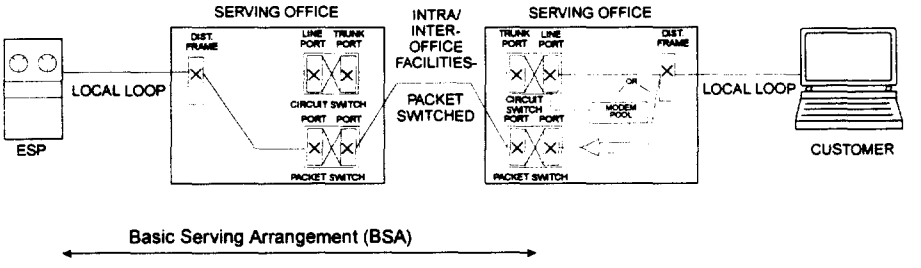

® PulseLink is a registered trademark of BellSouth.

® INFOPATH is a registered service mark of NYNEX.

℠ MicroLink II is a registered service mark of Southwestern Bell Telephone.

Alternatives

An alternative is an item that must be selected for the BSA to be technically meaningful. Alternative items may be available from some or all of the Local Exchange Carriers (LECs). Refer to the individual LEC tariff reference diskette for the reference information where LEC defined alternatives may be found. Examples of potential alternatives may be: Logical Channel, Flow Control Parameters, and Multiple Network Addresses.

Signaling

Signaling arrangements extend alerting information on metallic or fiber facilities from one customer premises location to another customer premises location. Dial (circuit-switched) access provides low- to moderate-throughput Public Packet Switched Network (PPSN) access through the voice telephone network. With dial-in access, a customer terminal and modem are attached to the Public Switched Telephone Network (PSTN) loop. The customer dials a North American Numbering Plan (NANP) address and the PSTN routes the call to a PPSN dial-up port. The PPSN answers the call with a modem supporting one of several modem protocols.

With dial-out access, a call is routed to a PPSN interface supporting dial-out service. At this interface, the access concentrator obtains the NANP address and uses the ITU-TS (formerly CCITT) V.25 calling procedures to instruct the PPSN modem to establish a physical connection with the customer via the PSTN.

Dedicated (nonswitched) access provides the customer with continuously available interfaces to the PPSN.

Transmission

The subject of transmission covers a broad range of performance considerations related to the physical facilities that compose network architecture. Transmission parameters are designed to provide objective transmission performance characteristics, as perceived by the end user and LEC, between the points of termination. Transmission parameters are defined for each Network Interface (see below) supporting this BSA. These parameters are defined in the reference documentation.

Network Interface

The electrical and physical interface with the LEC is described by a Network Channel Interface (NCI) code for each end user termination and each service provider termination. NCI codes are provided to aid the user in understanding the relationship of the network interface to the electrical or optical characteristics of the interface. NCI codes have four basic components: (1) number of conductors (wire or fibers), (2) protocol code, (3) nominal reference impedance code, and (4) any applicable protocol options.

References

- GR-301 Public Packet Switched Network Generic Requirements (PPSNGR) (replaces TR-TSY-301, Issue 2), Issue 2, December 1997
- TR-NPL-000011 Asynchronous Terminal and Host Interface Reference, Issue 1, March 1985
- Ameritech TR-NPL-000001 Public Packet Services Technical Interface Specifications, Issue 2, September 1988
- Ameritech TR-NPL-000003 Technical Interface Specifications for Asynchronous Service, Issue 2, May 1988

- Ameritech TR-NPL-000007 Digital Service Interface Specifications, Type 1, Issue B, December 1988
- Ameritech TR-NPL-000016 Technical Interface Specifications for X.75 Service, Issue 2, May 1988
- Bell Atlantic TR 72211 Interface Specification For The Bell Atlantic Public Data Network, Issue C, December 1991
- BellSouth TR-73515 PulseLink® X.75 Interface Specification, Issue B, April 1991
- BellSouth TR-73516 PulseLink® Physical Interface Specification, Issue C, September 1991
- NYNEX NTR-74250 INFOPATH® Packet Switching Service X.25 Interface Specification, Issue 2, January 1988
- Pacific Bell PUB L-780060-PB Public Packet Switching (PPS) - Technical Interface Specification, Issue 1, August 1989
- Southwestern Bell Telephone Technical Publication TP 76800, MicroLink II℠ X.25/X.75 Reference, Issue 4, September 1994
- U S WEST USWTR 77359 DIGIPAC® Service Interface Specifications For Public Packet Switching Network, Issue E, May 1994

® PulseLink is a registered trademark of BellSouth.

® INFOPATH is a registered service mark of NYNEX.

℠ MicroLink II is a registered service mark of Southwestern Bell Telephone.

® DIGIPAC is a registered service mark of U S WEST.

3. Category 3 - Dedicated Basic Serving Arrangement

A dedicated BSA provides an ESP with a dedicated point-to-point connection through the network. This category of serving arrangements are available full-time so that individual calls are not set up and taken down. This BSA is capable of supporting analog or digital signals at various transmission rates. The transmission interface may be 2-wire or 4-wire, or derived from a variety of multiplexing alternatives (for example, Digital Signal (DS) level 0 from DS level 1, or DS1 from DS3). It is also capable of providing supervisory signaling in some configurations.

Route diversity may be available with this serving arrangement.

3.1 Category 3, Type A - Dedicated Metallic BSA (1015)

Service Description

The Dedicated Metallic BSA provides a non-switched channel between the ESP and the ESP's client for the transmission of low speed varying signals at rates up to 30 baud. This service can only be provided where metallic facilities are available.

Metallic dedicated services are nonswitched services used for applications such as alarm, pilot wire protective relaying, and direct current (DC) tripping protective relaying. Interoffice metallic facilities will be limited in length to a total of five miles per channel. Metallic dedicated service (called MT1 in TR-NPL-000336 reference documentation) provides a metallic or equivalent pair between an end user and the service provider's point of termination.

Metallic dedicated service MT1 may have a second end user point of termination bridged to the first.

Generic Name of BSA	Regional Company BSA Name
Category 3, Type A - Dedicated Metallic BSA	BA - Dedicated Metallic NX - Dedicated - Metallic PB - Metallic Service SWB - Special Access - Metallic USW - Analog PLS - DCCS

Dedicated – Private Line – BSA

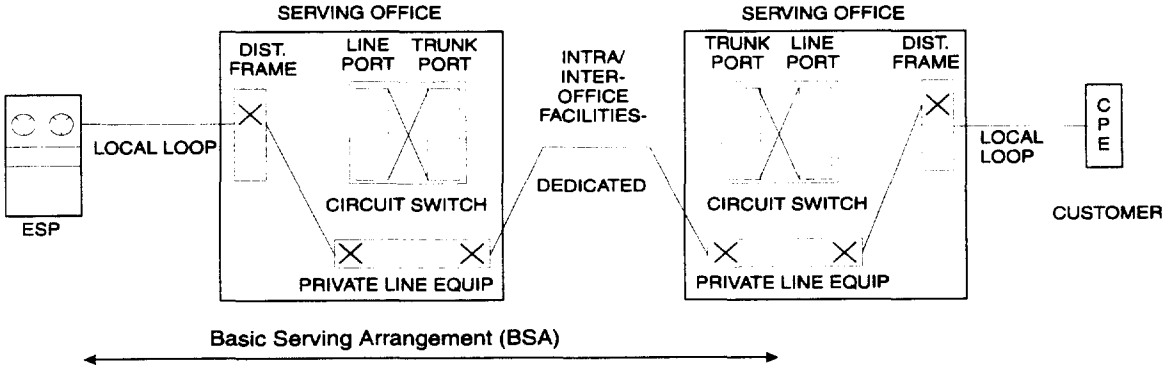

Alternatives

An alternative is an item that must be selected for the BSA to be technically meaningful. Alternative items may be available from some or all of the Local Exchange Carriers (LECs). Refer to the individual LEC tariff reference diskette for the reference information where LEC defined alternatives may be found. Examples of potential alternatives may be provision of services between customer designated premises through serving wire centers or between a customer designated premises and a telephone company hub.

Signaling

Metallic dedicated serving arrangements are available full-time and therefore signaling arrangements are not applicable.

Transmission

The subject of transmission covers a broad range of performance considerations related to the physical facilities that compose network architecture. Transmission parameters are designed to provide objective transmission performance characteristics, as perceived by the end user and LEC, between the points of termination. Transmission parameters are defined for each Network Interface (see below) supporting this BSA. These parameters are defined in the reference documentation.

Network Interfaces

The electrical interface with the LEC for metallic services is described by a Network Channel Interface (NCI) code for each end user termination and each service provider termination. NCI codes are provided to aid the user in understanding the relationship of the network interface to the electrical or optical characteristics of the interface. NCI codes have four basic components: (1) number of conductors (wire or fibers), (2) protocol code, (3) nominal reference impedance code, and (4) any applicable protocol options.

Reference

- TR-NPL-000336 Metallic and Telegraph Grade Special Access Service Transmission Parameter Limits and Interface Combinations, Issue 1, October 1987

3.2 Category 3, Type B - Dedicated Telegraph BSA (1016)

Service Description

The Dedicated Telegraph BSA provides a non-switched channel between the ESP and the ESP's client for the transmission of binary signals at rates of 0 to 75 baud or 0 to 150 baud.

Telegraph dedicated services are nonswitched services used for applications such as teletypewriter, telegraph grade control/remote metering, telegraph grade channel, telegraph grade extension, and telegraph grade entrance facilities. Certain applications must be provided using metallic facilities, and may only be offered where appropriate metallic facilities are available.

Telegraph Special Access services TG1 and TG2 may be available.

— TG1 service provides transmission of asynchronous transitions between two current levels at rates up to 75 baud between an end user and the ESP's point of termination. This service may be furnished for half-duplex or duplex operation in a two-point or multipoint configuration. Neither direct current (DC) continuity of this service nor the capability to continuously transport varying alternating current (AC) is assured.

— TG2 service provides transmission of asynchronous transitions between two current levels at rates up to 150 baud between an end user and the ESP's point of termination. This service may be furnished for half-duplex or duplex operation in a two-point or multipoint configuration. Neither DC continuity of this service nor the capability to continuously transport varying AC is assured.

Telegraph services TG1 and TG2 may have active or passive multipoint-bridging, the maximum number of bridges to be determined by service application design limitations.

Generic Name of BSA	Regional Company BSA Name
Category 3, Type B - Dedicated Telegraph BSA	BA - Dedicated Telegraph NX - Dedicated - Telegraph Grade PB - Telegraph Grade Service USW - Analog PLS - LSDS

Dedicated – Private Line – BSA

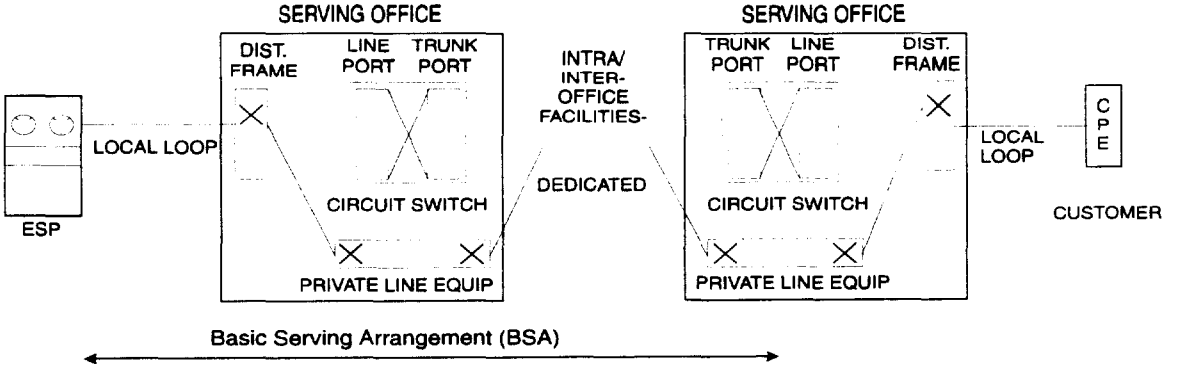

Alternatives

An alternative is an item that must be selected for the BSA to be technically meaningful. Alternative items may be available from some of all of the Local Exchange Carriers (LECs). Refer to the individual LEC tariff reference diskette for the reference information where LEC defined alternatives may be found. Examples of potential alternatives may be: half duplex or full duplex operation in a two-point or multipoint configuration.

Signaling

Telegraph dedicated serving arrangements are available full-time and therefore signaling arrangements are not applicable.

Transmission

The subject of transmission covers a broad range of performance considerations related to the physical facilities that compose network architecture. Transmission parameters are designed to provide objective transmission performance characteristics, as perceived by the end user and LEC, between the points of termination. Transmission parameters are defined for each Network Interface (see below) supporting this BSA. These parameters are defined in the reference documentation.

Network Interfaces

The electrical interface with the LEC for metallic services is described by a Network Channel Interface (NCI) code for each end user termination and each service provider termination. The NCI codes for the desired service must be specified by the customer when ordering telegraph grade services. NCI codes are provided to aid the user in understanding the relationship of the network interface to the electrical or optical characteristics of the interface. NCI codes have four basic components: (1) number of conductors (wire or fibers), (2) protocol code, (3) nominal reference impedance code, and (4) any applicable protocol options.

Reference

- TR-NPL-000336 Metallic and Telegraph Grade Special Access Service Transmission Parameter Limits and Interface Combinations, Issue 1, October 1987

3.3 Category 3, Type C - Dedicated Voice Grade BSA (1017)

Service Description

The dedicated voice grade BSA provides an ESP with a dedicated connection through the network to the ESP's client. This BSA is capable of supporting the transmission of analog signals within an approximate bandwidth of 300 - 3000 Hz. The transmission interface may be 2-wire or 4-wire. Voice grade services are provided between service provider designated premises through serving wire centers or between a service provider designated premises and a telephone company hub. It is capable of providing various supervisory signaling alternatives.

Generic Name of BSA	Regional Company BSA Name
Category 3, Type C - Dedicated Voice Grade BSA	AM - Direct Analog BA - Dedicated Voice-Grade BS - Dedicated - Private Line NX - Dedicated - Voice Grade PB - Voice Grade Service SWB - Special Access - Voice Grade USW - Analog PLS - VGS

Dedicated – Private Line – BSA

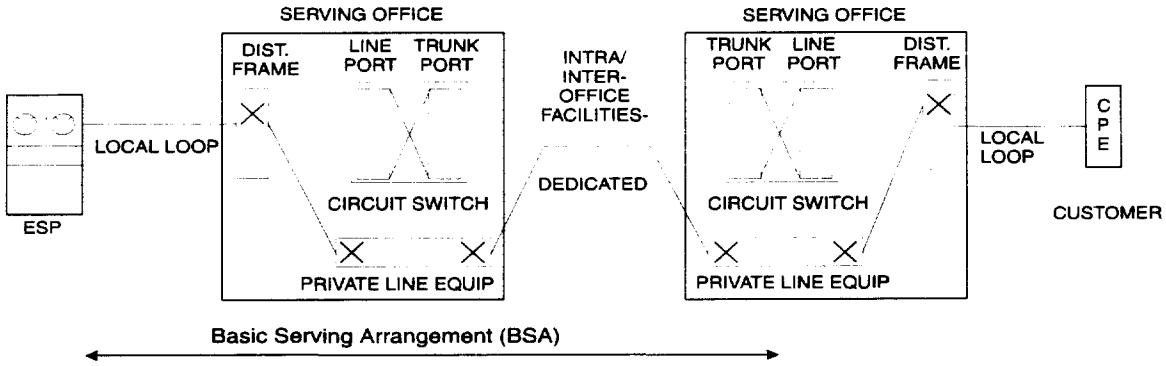

Alternatives

An alternative is an item that must be selected for the BSA to be technically meaningful. Alternative items may be available from some or all of the Local Exchange Carriers (LECs). Refer to the individual LEC tariff reference diskette for the reference information where LEC defined alternatives may be found. Examples of potential alternatives may be: transfer arrangement, improved termination, data capability, telephoto capability, and signaling capabilities.

Signaling

Signaling capability provides for the process by which one customer premises alerts another customer premises on the same service with which it wishes to communicate. These signals are the means by which the end user initiates a request for service, holds a connection or releases a connection. Examples of signaling arrangements are: loop-start, ground-start, E&M, and reverse-battery.

Transmission

The subject of transmission covers a broad range of performance considerations related to the physical facilities that compose network architecture. Transmission parameters are designed to provide objective transmission performance characteristics, as perceived by the end user and LEC, between the points of termination. Transmission parameters are defined for each Network Interface (see below) supporting this BSA. These parameters are defined in the reference documentation.

Network Interfaces

The electrical and physical interface with the LEC is described by a Network Channel Interface (NCI) code for each end user termination and each service provider termination. NCI codes are provided to aid the user in understanding the relationship of the network interface to the electrical or optical characteristics of the interface. NCI codes have four basic components: (1) number of conductors (wire or fibers), (2) protocol code, (3) nominal reference impedance code, and (4) any applicable protocol options.

References

- TR-NWT-000335 Voice Grade Special Access Services - Transmission Parameter Limits and Interface Combinations, Issue 3, May 1993
- TR-NWT-000965 IntraLATA Voice Grade Private Line Services Transmission Parameter Limits and Interface Combinations, Issue 1 - October 1989, Revision 1 - December 1989, Issue 2 - December 1991
- GR-342 High-Capacity Digital Special Access Service - Transmission Parameter Limits and Interface Combinations, Issue 1, December 1995 (replaces TR-INS-000342)

3.4 Category 3, Type D - Dedicated Program Audio BSA (1018)

Service Description

The dedicated program audio BSA provides an ESP with a one-way non-switched channel to the ESP's client that can pass an analog signal up to 15000 Hz. This serving arrangement is usually provided for transmission of music, but it is capable of voice and data within the band pass limits. Nominal frequency bandwidths for this serving arrangement are: 50 to 15000 Hz, 200 to 3500 Hz, 100 to 5000 Hz, 300 to 2500 Hz, or 50 to 8000 Hz.

Generic Name of BSA	Regional Company BSA Name
Category 3, Type D - Dedicated Program Audio BSA	AM - Dedicated Program Audio BA - Dedicated Program Audio BS - Dedicated Program Audio NX - Dedicated - Program Audio PB - Program Audio Service SWB - Special Access - Program Audio USW - Analog PLS - AS

Dedicated – Private Line – BSA

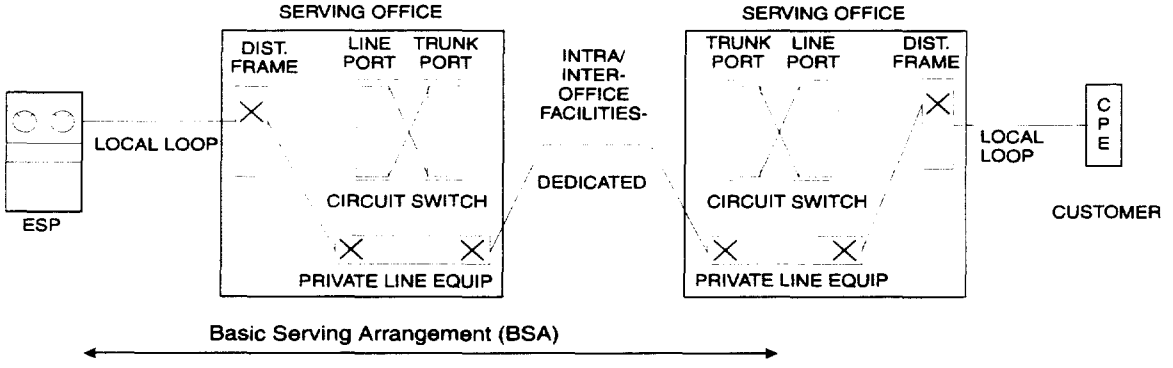

Alternatives

An alternative is an item that must be selected for the BSA to be technically meaningful. Alternative items may be available from some or all of the Local Exchange Carriers (LECs). Refer to the individual LEC tariff reference diskette for the reference information where LEC defined alternatives may be found. Examples of potential alternatives may be: stereo and gain conditioning.

Signaling

Program Audio services are available full-time and therefore signaling arrangements are not applicable.

Transmission

The subject of transmission covers a broad range of performance considerations related to the physical facilities that compose network architecture. Transmission parameters are designed to provide objective transmission performance

characteristics, as perceived by the end user and LEC, between the points of termination. Transmission parameters are defined for each Network Interface (see below) supporting this BSA. These parameters are defined in the reference documentation.

Network Interfaces

The electrical and physical interface with the LEC is described by a Network Channel Interface (NCI) code for each end user termination and each service provider termination. NCI codes are provided to aid the user in understanding the relationship of the network interface to the electrical or optical characteristics of the interface. NCI codes have four basic components: (1) number of conductors (wire or fibers), (2) protocol code, (3) nominal reference impedance code, and (4) any applicable protocol options.

References

- GR-337 Program Audio Special Access and Local Channel Services, Issue 1, December 1995 (replaces TR-NPL-000337, Issue 1)
- TR-TSY-000431 15 kHz Digital Audio Terminal for Program or Television Requirements and Objectives, Issue 1, October 1987
- GR-342 High-Capacity Digital Access Service - Transmission Parameter Limits and Interface Combinations, Issue 1, December 1995 (replaces TR-INS-000342, Issue 1)
- TR-NPL-000339 Wideband Analog Special Access Service - Transmission Parameter Limits and Interface Combinations, Issue 1, October 1987

3.5 Category 3, Type E - Dedicated Video BSA (1019)

Service Description

The dedicated video BSA provides an ESP with a dedicated, broadband communications channel to the ESP's client. Applications may include (but are not limited to): full-time and part-time commercial broadcast quality television, noncommercial broadcast quality television, video teleconferencing, distance-learning applications, surveillance, closed-circuit television. The channel is capable of transmitting a standard 525 line/60 field monochrome or National Television Systems Committee (NTSC) color video signal and associated audio signals. The associated audio signal(s) may be either duplexed or provided as separate channels. Video services are provided between customer designated premises through Serving Wire Center(s) or between a customer designated premises and a telephone company hub.

Generic Name of BSA	Regional Company BSA Name
Category 3, Type E - Dedicated Video BSA	AM - Dedicated Video
	BA - Dedicated Video Service
	BS - Dedicated Video
	NX - Dedicated - Video
	PB - Video Service
	SWB - Special Access - Video
	USW - Analog PLS - VS

Dedicated – Private Line – BSA

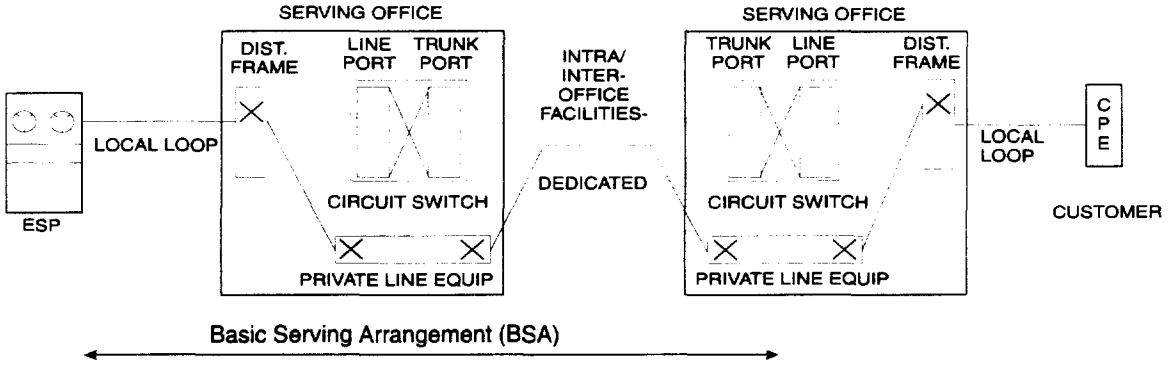

Alternatives

An alternative is an item that must be selected for the BSA to be technically meaningful. Alternative items may be available from some or all of the Local Exchange Carriers (LECs). Refer to the individual LEC tariff reference diskette for the reference information where LEC defined alternatives may be found. Examples of potential alternatives may be: 5 or 15 Hz audio channels, duplexed or separate channel audio signals, and video/audio delay difference.

Signaling

Video services are available full-time and therefore signaling arrangements are not applicable.

Transmission

The subject of transmission covers a broad range of performance considerations related to the physical facilities that compose network architecture. Transmission parameters are designed to provide objective transmission performance characteristics, as perceived by the end user and LEC, between the points of termination. Transmission parameters are defined for each Network Interface (see below) supporting this BSA. These parameters are defined in the reference documentation.

Network Interfaces

The electrical and physical interface with the LEC is described by a Network Channel Interface (NCI) code for each end user termination and each service provider termination. NCI codes define the bandwidth and the provision of the audio signal(s) associated with a broadcast video channel. NCI codes are: (1) Total Conductors, (2) Protocol, (3) Impedance, (4) Protocol Options, and (5) Transmission Level Point (ignored for Television Special Access).

References

- GR-338 Set: Television Special Access and Local Channel Services - Transmission Parameter Limits and Interface Combinations, Issue 1, December 1995 (replaces TR-TSV-000338, Issue 2)
- TR-TSY-000431 15 kHz Digital Audio Terminal for Program or Television Requirements and Objectives, Issue 1, October 1987
- U S WEST Publication 77326 U S WEST Fiber Optic Commercial Video Services, Issue D, December 1994

3.6 Category 3, Type F - Dedicated Digital (< 64 kbps) BSA (1020)

Service Description

The dedicated digital (< 64 kbps) BSA provides an ESP with a 4-wire digital channel to the ESP's client This serving arrangement provides for digital transmission of synchronous serial data at primary rates of 2.4, 4.8, 9.6, 19.2, or 56 kbps, plus associated secondary channel rates of 2.4, 4.8, 9.6, 19.2, or 56 kbps. Error Detection/Correction is an inherent part of this BSA.

Digital Data special access services are nonswitched channels that provide the capability to transmit digital data between two end user points of termination or and end user point of termination and a service provider point of termination.

Generic Name of BSA	Regional Company BSA Name
Category 3, Type F - Dedicated Digital (< 64 kbps) BSA	AM - Ameritech Base Rate Services BA - Digital Data Service BS - SynchroNet® /DDS NX - Dedicated - Digital Data PB - Digital Data Service, Private Line Services SWB - Special Access - MegaLink℠ Data USW - Digital Data Service

Dedicated – Private Line – BSA

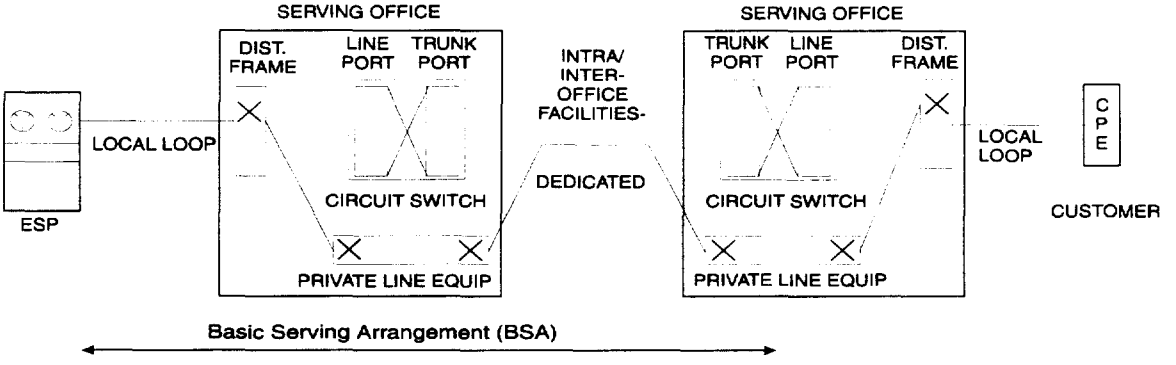

Alternatives

An alternative is an item that must be selected for the BSA to be technically meaningful. Alternative items may be available from some or all of the Local Exchange Carriers (LECs). Refer to the individual LEC tariff reference diskette for the reference information where LEC defined alternatives may be found. Examples of potential alternatives may be: Transfer Arrangement.

® SynchroNet is a registered service mark of BellSouth Corporation.

℠ MegaLink is a service mark of Southwestern Bell Telephone.

Signaling Arrangements

These services are available full-time and therefore supervisory signaling arrangements are not applicable. The signaling service is synchronous with timing provided through the LEC's facilities to the end user on the received bit stream. Individual calls are not set up and taken down.

Transmission Capabilities

The subject of transmission covers a broad range of performance considerations related to the physical facilities that compose network architecture. Transmission parameters are designed to provide objective transmission performance characteristics, as perceived by the end user and LEC, between the points of termination. Transmission parameters are defined for each Network Interface (see below) supporting this BSA. These parameters are defined in the reference documentation.

Network Interfaces

The electrical and physical interface with the LEC is described by a Network Channel Interface (NCI) code for each end user termination and each service provider termination. NCI codes are provided to aid the user in understanding the relationship of the network interface to the electrical or optical characteristics of the interface. NCI codes have four basic components: (1) number of conductors (wire or fibers), (2) protocol code, (3) nominal reference impedance code, and (4) any applicable protocol options.

References

- TR-NWT-000341 Digital Data Special Access Service Transmission Parameter Limits and Interface Combinations, Issue 2, February 1993
- U S WEST document 77312 U S WEST Digital Data Service, Technical Description, Issue D, October 1994

3.7 Category 3, Type G - Dedicated High Capacity Digital (1.544 Mbps) BSA (1021)

Service Description

The dedicated high capacity digital (1.544 Mbps) BSA provides an ESP with a dedicated channel. High Capacity Digital service is defined as a service that provides two-point, private-line, full duplex transmission at 1.544 Mbps isochronous serial data with a payload of 1.536 Mbps between an end user and an end user or between an end user and a LEC central office.

In some cases, this BSA can be provisioned for dedicated transport of Extended Superframe Format (ESF) datachannel capability.

Generic Name of BSA	Regional Company BSA Name
Category 3, Type G - Dedicated High Capacity Digital (1.544 Mbps) BSA	AM - Ameritech DS1 Services BA - High Capacity Digital Service BS - MegaLink® /HiCap NX - Dedicated Digital - 1.544 Mbps PB - High Capacity Services (1.544 Mbps) SWB - Special Access - High Capacity (1.544 Mbps) USW - DS1 Service

Dedicated – Private Line – BSA

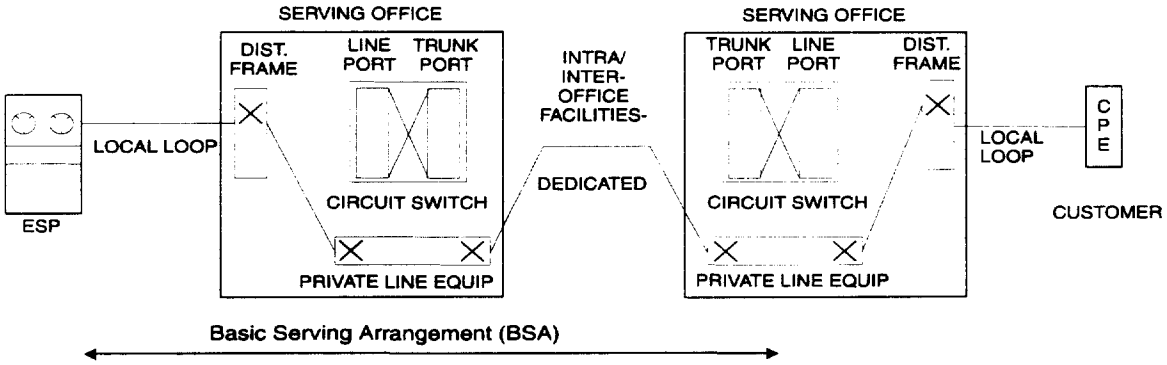

Alternatives

An alternative is an item that must be selected for the BSA to be technically meaningful. Alternative items may be available from some or all of the Local Exchange Carriers (LECs). Refer to the individual LEC tariff reference diskette

® MegaLink is a registered service mark of BellSouth Corporation.

for the reference information where LEC defined alternatives may be found. An example of a potential alternative may be: transfer arrangement.

Signaling

The signaling service is isochronous with timing provided through the LEC's facilities to the end user on the received bit stream. Individual calls are not set up and taken down.

Transmission

The subject of transmission covers a broad range of performance considerations related to the physical facilities that compose network architecture. Transmission parameters are designed to provide objective transmission performance characteristics, as perceived by the end user and LEC, between the points of termination. Transmission parameters are defined for each Network Interface (see below) supporting this BSA. These parameters are defined in the reference documentation.

Network Interfaces

The electrical and physical interface with the LEC is described by a Network Channel Interface (NCI) code for each end user termination and each service provider termination. NCI codes are provided to aid the user in understanding the relationship of the network interface to the electrical or optical characteristics of the interface. NCI codes have four basic components: (1) number of conductors (wire or fibers), (2) protocol code, (3) nominal reference impedance code, and (4) any applicable protocol options.

References

- GR-342 High-Capacity Digital Special Access Service - Transmission Parameter Limits and Interface Combinations, Issue 1, December 1995 (replaces TR-INS-000342, Issue 1)
- GR-54 DS1 High Capacity Digital Service End User Metallic Interface Specifications, Issue 1, December 1995 (replaces TR-NPL-000054, Issue 1)
- TR-TSY-000312 Functional Criteria for the DS1 Interface Connector, Issue 1, February 1988
- Ameritech document AM-TR-OAT-000033, DS1 Customer Installation: Metallic Interface, Issue B, January 1990
- Pacific Telesis technical reference PUB L-780021-PB/NB Requirements and Objectives for Network Interface Unit and Mounting, Issue 2, November 1994
- U S WEST engineering publication 77327 Digicom® III High Capacity Digital Access Service "Joint Designed" Network Channel Interface, December 1988

® Digicom is a registered trademark of U S WEST Communications, Inc.

3.8 Category 3, Type H - Dedicated High Capacity Digital (>1.544 Mbps) BSA (1022)

Service Description

The dedicated high capacity digital (>1.544 Mbps) BSA provides an ESP with a dedicated channel to the ESP's client via a digital facility. High Capacity Digital service is defined as a service that provides two-point, private-line, transmission at speeds above 1.544 Mbps between an end user and an end user or between an end user and a LEC central office. Individual calls are not set up and taken down. The ESP must specify the desired transmission speed as an alternative with this BSA.

Generic Name of BSA	Regional Company BSA Name
Category 3, Type H - Dedicated High Capacity Digital (>1.544 Mbps) BSA	AM - Ameritech DS3 Services BA - High Capacity/Lightwave Service BS - LightGate® /HiCap NX - Dedicated - Digital - 45 Mbps PB - High Capacity Services (>1.544 Mbps) SWB - Special Access - High Capacity MegaLink℠ Custom USW - DS3 Service

Dedicated – Private Line – BSA

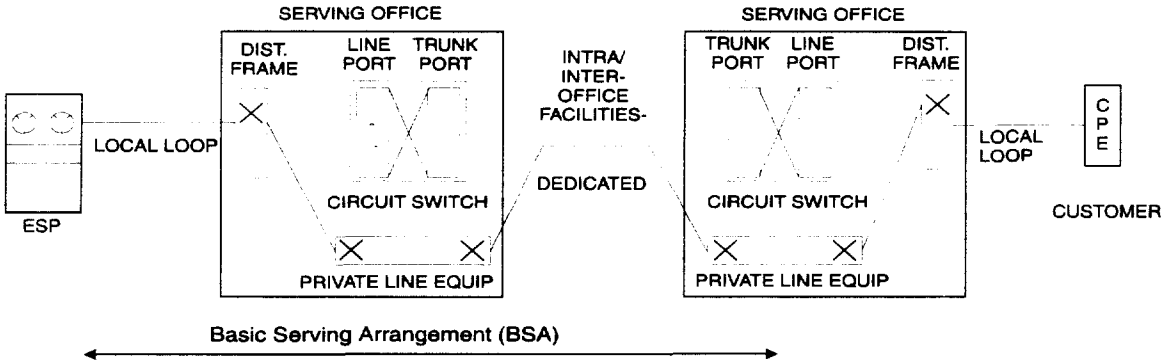

Alternatives

An alternative is an item that must be selected for the BSA to be technically meaningful. Alternative items may be available from some or all of the Local Exchange Carriers (LECs). Refer to the individual LEC tariff reference diskette for the reference information where LEC defined alternatives may be found. Examples of potential alternatives may be: transmission speed and transfer arrangement.

® LightGate is a registered service mark for BellSouth Corporation.

℠ MegaLink is a service mark for Southwestern Bell Telephone.

Signaling

The signaling service is isochronous with timing provided through the LEC's facilities to the end user on the received bit stream. Individual calls are not set up and taken down.

Transmission

The subject of transmission covers a broad range of performance considerations related to the physical facilities that compose network architecture. Transmission parameters are designed to provide objective transmission performance characteristics, as perceived by the end user and LEC, between the points of termination. Transmission parameters are defined for each Network Interface (see below) supporting this BSA. These parameters are defined in the reference documentation.

Network Interfaces

The electrical and physical interface with the LEC is described by a Network Channel Interface (NCI) code for each end user termination and each service provider termination. NCI codes are provided to aid the user in understanding the relationship of the network interface to the electrical or optical characteristics of the interface. NCI codes have four basic components: (1) number of conductors (wire or fibers), (2) protocol code, (3) nominal reference impedance code, and (4) any applicable protocol options.

References

- GR-342 High-Capacity Digital Special Access Service - Transmission Parameter Limits and Interface Combinations, Issue 1, December 1995 (replaces TR-INS-000342, Issue 1)
- U S WEST engineering publication 77327 Digicom® III High Capacity Digital Access Service "Joint Designed" Network Channel Interface, December 1988
- U S WEST publication 77324 U S WEST DS3 Service, Issue C, April 1993.

® Digicom is a registered trademark of U S WEST Communications, Inc.

3.9 Category 3, Type I - Dedicated Alert Transport BSA (1023)

Service Description

The dedicated alert transport BSA using derived local channel technology and a LEC provided scanner offers ESPs a 24 hour supervised monitoring capability using compatible local loop access lines.

The scanner continuously monitors the status of all clients. A host processor monitors all scanners and, in response to a change in status, will identify the subscriber from which the alert condition originates and notify the appropriate ESP.

This serving arrangement utilizes derived channels which comply with Underwriter's Laboratories (UL) AA and National Fire Protection A and National Fire Protection Association (NFPA) requirements.

Generic Name of BSA	Regional Company BSA Name
Category 3, Type I - Dedicated Alert Transport BSA	BA - REACT[SM] BS - WATCHALERT® NX - PULSENET[SM] Alert Transport Service PB - POLLSTAR[SM] DLC Security Transport

Dedicated – Private Line – BSA

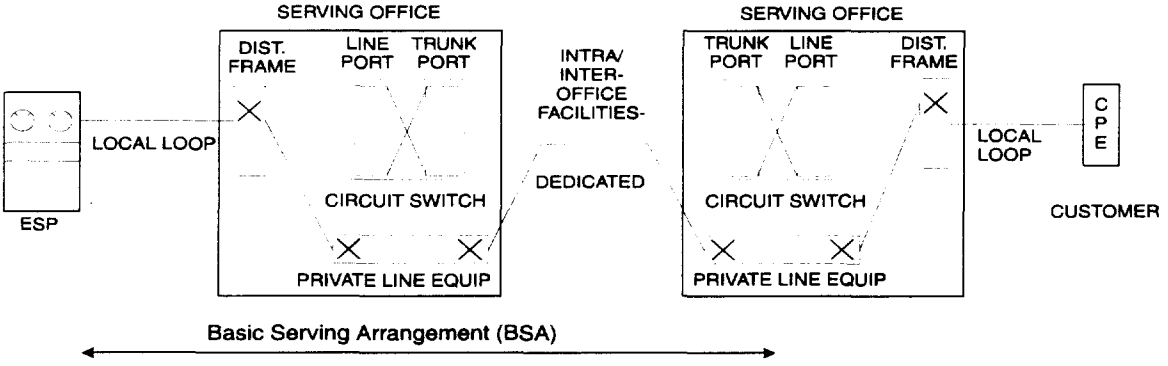

Alternatives

An alternative is an item that must be selected for the BSA to be technically meaningful. Alternative items may be available from some or all of the Local Exchange Carriers (LECs). Refer to the individual LEC tariff reference diskette for the reference information where LEC defined alternatives may be found.

[SM] REACT is a service mark of Bell Atlantic.

® WATCHALERT is a registered service mark of BellSouth Corporation.

[SM] PULSENET is a service mark of NYNEX.

[SM] POLLSTAR is a service mark of Pacific Bell.