STEPTOE & JOHNSON LLP

ATTORNEYS AT LAW

DOCKET FILE COPY DUPLICATE

330 Connecticut Avenue, NW
Washington, DC 20036-1795

Telephone 202.429.3000
Facsimile 202.429.3902
www.steptoe.com

Pantelis Michalopoulos
202.429.6494
pmichalo@steptoe.com

EX PARTE OR LATE FILED

October 29, 1999

RECEIVED
OCT 29 1999
FEDERAL COMMUNICATIONS COMMISSION
OFFICE OF THE SECRETARY

Ms. Magalie Salas
Secretary
Federal Communications Commission
445 Twelfth Street, S.W.
Washington, D.C. 20554

Re: Ex Parte Presentation In File No. 0094-EX-ST-1999
ET Docket No. 98-206, RM-9147; RM-9245

Dear Ms. Salas:

Pursuant to Section 1.206 of the Commission's Rules and Regulations, 47 C.F.R. § 1.1206, EchoStar Satellite Corporation ("EchoStar") hereby submits a written ex-parte presentation in the above-captioned matters entitled "Preliminary Report on the Impact of Northpoint on the Direct Broadcast Satellite Service Based Upon Testing Performed to Date."

This Report draws the following main conclusions regarding the test conducted by Diversified Communications Engineering, Inc. ("Northpoint") in the Washington, D.C. area: ***first,*** Northpoint's own submissions reveal that it designed its tests to conceal interference problems by, among other things, taking advantage of unique geographical characteristics (like the predictable lack of DBS subscribers on the Potomac River) that cannot be the basis for nationwide licensing. Northpoint's trumpeting that its testing produced no consumer complaints is meaningless in light of the test design as well as its failure to provide adequate notice to DBS providers, effectively preventing them from monitoring Northpoint's rain testing.

Even so, ***second,*** Northpoint's own purported measurements reveal the occurrence of harmful interference into many of the receive sites where Northpoint states it has conducted its measurements. To explain away its own measurements, Northpoint resorts to the completely unscientific method of "averaging" – *i.e.*, it tries to make something of its assertion

No. of Copies rec'd 0+1
List ABCDE

that the *average* measurement reflected a slight degradation of DBS signal reception. Even if it were true, averaging is an invalid method for assessing harmful interference into ubiquitous users: simply put, the consumers suffering from the interference cannot take any comfort from the fact that other consumers may be in a better position.

In essence, therefore, Northpoint is telling the Commission: you should allow us to operate throughout the country in the DBS band because we will be able to locate our transmitters in all U.S. cities so that the worst-impact areas will be rivers and deserts or parklands; and you should disregard the harmful interference received from Northpoint by a DBS subscriber if other DBS consumers receive less interference. These are unreasonable requests, and Northpoint's own claims cannot sustain a Commission decision to license its system.

In any event, ***third,*** what little monitoring was afforded by Northpoint's dubious methods has revealed a picture that is even bleaker than Northpoint's own measurements. Even in these circumstances, Northpoint's "result-oriented" testing produced harmful interference that exceeded by many orders of magnitude any acceptable standard.

In its aggressive public relations campaign, Northpoint has been discounting the technical concerns of DBS operators. According to Northpoint, these concerns hide EchoStar's "true" reason for opposing Northpoint's system – fear of competition. This carefully orchestrated campaign of innuendo and intimation may help Northpoint portray itself as the righteous new entrant, but it is irresponsibly false. EchoStar has long welcomed competition from, and has never opposed, terrestrial wireless technologies for delivering multichannel video. EchoStar did not oppose the Commission's proposal and eventual decision to allocate 1,000 MHz of spectrum for Local Multipoint Distribution Services. Nor did EchoStar object to the Commission's proposal to allow digital wireless cable services (Multichannel Multipoint Distribution Services). EchoStar's objection to Northpoint is not based on fear of competition, but on fear that Northpoint's service would wipe out reliable DBS reception for many subscribers. The attached preliminary technical report, documenting the harmful interference to result from Northpoint, and the further technical studies being prepared by EchoStar, are all based on technical concerns alone, and should help further dispel Northpoint's innuendo about the DBS operators' motives.

An original and one copy of this presentation are submitted for inclusion in the above-captioned file numbers.

Very truly yours,

Pantelis Michalopoulos
Attorney for EchoStar Satellite Corporation

cc: Antoinette Cook Bush, Skadden Arps Slate
Meagher & Flom, LLP (Northpoint) (w/encl.)
Tom Derenge (OET) (w/encl.)
Jim Burtle (OET) (w/encl.)
Bruno Pattan (OET) (w/encl.)
Charles Iseman (OET) (w/encl.)
Tom Stanley (WTB) (w/encl.)
Michael Pollak (WTB) (w/encl.)
Harry Ng (IB) (w/encl.)
Kim Baum (IB) (w/encl.)
Donald Abelson, Bureau Chief (IB) (w/encl.)
Bruce Franca, Deputy Chief (OET) (w/encl.)
Dale Hatfield, Chief (OET) (w/encl.)
Chairman William E. Kennard (w/encl.)
Commissioner Susan Ness (w/encl.)
Commissioner Harold W. Furchtgott-Roth (w/encl.)
Commissioner Michael K. Powell (w/encl.)
Commissioner Gloria Tristani (w/encl.)

Preliminary Report on the Impact of Northpoint on the Direct Broadcast Satellite Service Based Upon Testing Performed to Date

1 Introduction

This report has been prepared by EchoStar Satellite Corporation ("EchoStar") following the limited measurements that DIRECTV, Inc. ("DIRECTV") and EchoStar have been able to conduct during the period when Northpoint has been performing test transmissions in the Washington D.C. area. It provides the results of those EchoStar measurements and the conclusions that can be drawn concerning the harmful interference that would occur to Direct Broadcast Satellite ("DBS") services nationwide if the Northpoint system was deployed across the USA. It discusses the need for further controlled measurements that would be essential before the FCC could seriously consider licensing a co-frequency interfering system such as Northpoint. Finally it provides a very preliminary technical response to the October 7 letter from Northpoint to the FCC and to an October 1999 Progress Report filed by Northpoint.

Briefly, Northpoint's own submissions reveal that it designed its tests to conceal interference problems by, among other things, taking advantage of unique geographical characteristics (like the predictable lack of DBS subscribers on the Potomac River) that cannot be the basis for nationwide licensing. Northpoint's trumpeting that its testing produced no consumer complaints is meaningless in light of the test design as well as its failure to provide adequate notice to DBS providers, effectively preventing them from monitoring Northpoint's rain testing. Even so, Northpoint's own purported measurements reveal the occurrence of harmful interference into many of the receive sites where Northpoint states it has conducted its measurements. To explain away its own measurements, Northpoint resorts to the completely unscientific method of "averaging" – *i.e.*, it tries to make something of its assertion that the *average* measurement reflected a slight degradation of DBS signal reception. Even if it were true, averaging is an invalid method for assessing harmful interference into ubiquitous users, as the consumers suffering from the interference cannot take any comfort from the fact that other consumers may be in a better position.

In essence, therefore, Northpoint is telling the Commission: you should allow us to operate throughout the country in the DBS band because we will be able to locate our transmitters in all U.S. cities so that the worst-impact areas will be rivers and deserts or parklands; and you should disregard the harmful interference received from Northpoint by a DBS subscriber if other DBS consumers receive less interference. These are unreasonable requests, and Northpoint's own claims cannot sustain a Commission decision to license its system.

In any event, what little monitoring was afforded by Northpoint's dubious methods has revealed a picture that is even bleaker than Northpoint's own measurements. Even in these circumstances, Northpoint's "result-oriented" testing produced harmful interference that exceeded by many orders of magnitude any acceptable standard.

In its aggressive public relations campaign, Northpoint has been discounting the technical concerns of DBS operators. According to Northpoint, these concerns hide EchoStar's "true" reason for opposing Northpoint's system – fear of competition. This carefully orchestrated campaign of innuendo and intimation may help Northpoint portray itself as the righteous new entrant, but it is irresponsibly false. EchoStar has long welcomed competition from, and has never opposed, terrestrial wireless technologies for delivering multichannel video. EchoStar did not oppose the Commission's proposal and eventual decision to allocate 1,000 MHz of spectrum for Local Multipoint Distribution Services. Nor did EchoStar object to the Commission's proposal to allow digital wireless cable services (Multichannel Multipoint Distribution Services). EchoStar's objection to Northpoint is not based on fear of competition, but on fear that Northpoint's service would wipe out reliable DBS reception for many subscribers. This technical report, documenting the harmful interference to result from Northpoint, and the further technical studies being prepared by EchoStar, are all based on technical concerns alone, and should help further dispel Northpoint's innuendoes about the DBS operators' motives.

2 Northpoint's Tests are Totally Inadequate to Conclude that the Proposed Northpoint System is Compatible with Existing DBS Services

The tests performed to date by Northpoint have been designed to conceal the interference problems that would exist if a system such as Northpoint was ever deployed across the USA. We will explain this assertion in this section.

There were fundamental flaws with the design of the Northpoint tests, as they were performed in the Washington D.C. area The problems can be divided into three categories, as follows:

1 Crucial information about the test parameters was not provided to the DBS operators either before or during the tests. The July 6, 1999 Northpoint Test Plan and subsequent periodic test plans, which were the only source of information concerning what Northpoint would be doing during the tests, were vague, and gave no specific information that would allow the DBS operators to know the important characteristics of the transmissions at any particular time. Specific areas of uncertainty were as follows:

- The transmit EIRP was planned to be varied between +12.5 dBm and +37.5 dBm, a range of 25 dB (or 316 to 1 variation in transmitted power).[1] When the interference was measured by DIRECTV and EchoStar it was uncertain as to where in this range of transmit power Northpoint was actually operating. If indeed the actual EIRP was +12.5 dBm, and Northpoint plans to operate its transmitters in the field at +37.5 dBm, then the interference would be 25 dB higher than that measured here.

---

[1] In fact the contents of the Northpoint STA leads to the conclusion that the EIRP could be as high as +40 dBm, based on the stated maximum power of +30 dBm and peak antenna gain of +10 dBi. (see the Request for Special Temporary Authority of Diversified Communications Engineering, Inc., date-stamped March 12, 1999).

- While Northpoint was required by the conditions to its experimental authorization to disclose the orientation of its antenna, "including the beam tilt if appropriate," Northpoint's test plans do not disclose beam tilt (i.e., elevation relative to horizontal) of the Northpoint antenna. Indeed Northpoint proposed to adjust the tilt, depending on the results they were obtaining, throughout the test period. Clearly the beam tilt was a variable that Northpoint could use to try to "tune out" the interference to the DBS receivers, which is a totally unsatisfactory test philosophy. This fact alone illustrates how the Northpoint test was designed and implemented to produce the best possible results (from the Northpoint perspective) for interference into the DBS receivers, rather than to provide an objective assessment of the interference situation.

  Without knowledge of the Northpoint transmit antenna beam tilt we cannot determine where the EchoStar test receive site was located in terms of the gain of the Northpoint antenna, and therefore have no idea whether the interference results are maximum or minimum.

- There is no information available to the DBS operators from the Northpoint test plans that details the building blockage and foliage effects that could have been artificially shielding the DBS receivers in certain directions. The building blockage we are referring to here is that which results from the structure of the building on which the Northpoint test transmitter was located. There may well have been (and most likely there were) one or more structures on the rooftop of the USA Today that would have completely blocked the transmissions from the Northpoint transmitter in some azimuth directions. In addition, the rooftop itself would have blocked the signal path in directions towards points on the ground that were closer than about 1000 yards or more from the transmitter DBS receivers in such locations are particularly vulnerable to interference from the proposed Northpoint system, and it is crucially important to know the details of the signal path for such situations. Indeed, Northpoint's concluding report concedes that dishes observed on buildings adjacent to the USA Today building "were naturally shielded from the Northpoint transmitter by the buildings to which these dishes were attached," and that the Northpoint transmit antenna "was installed four feet down the face of the building" in order to protect two DIRECTV dishes at the rooftop of the building [2]. This is another example of the way in which Northpoint has deliberately distorted the interference problem that would arise if the Northpoint system was ever freely deployed.

- Northpoint also deprived DBS operators of the ability to monitor its testing. Particularly for its rain testing, Northpoint did not give notice of its plan until September 16, 1999 (the date on whose morning it had already commenced testing), despite the one-week advance notice requirement in its authorization.

2. The Northpoint test site (on top of the USA Today building in Rosslyn, VA) appears to have been deliberately chosen because of its unique characteristics. The first and most important

---

[2] Northpoint October 1999 Report at 8.

transmitter would have to be located in the Potomac River! Figure 1 below illustrates this fact.

Figure 1 - Map Showing the Area Around the Northpoint Test Transmitter

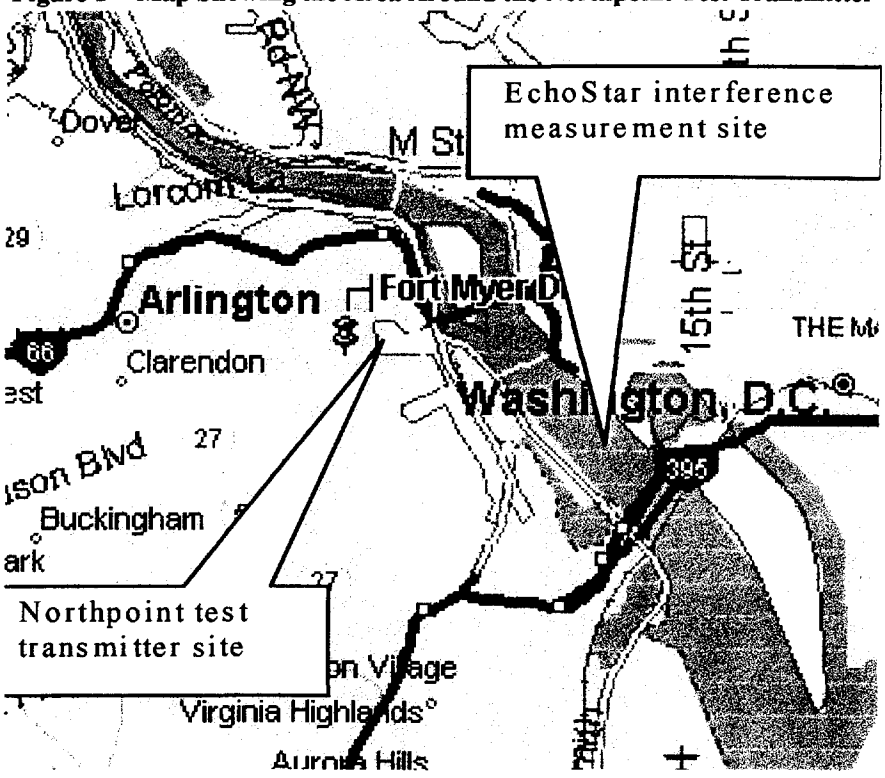

The USA Today building is surrounded on the north and east sides by wide stretches of the Potomac River. In addition, the land areas that were most seriously affected by interference, in the case of DBS service from the EchoStar satellite at 61.5°W.L., were totally uninhabited. Northpoint itself emphatically points out in its October 1999 Report that "[t]he tiny area within the 15 dB contour of Northpoint's transmitter is completely located in the Potomac River," and that, while a portion of the 20 dB contour falls over land, "it is important to note that this area is primarily uninhabited . . . ."[3]. According to Northpoint, "[t]his installation is typical of the way in which Northpoint installations will be made in the real world."[4]. Of course, however, proximity to substantial rivers and uninhabited federal lands cannot be a solid basis for nationwide licensing of a ubiquitous urban service.

In the direction where the EchoStar test receiver was located, which was approximately south-east from the Northpoint transmitter, EchoStar and DIRECTV had to perform tests

---

3 Northpoint October 1999 Report at 4-5. *See also* Letter from Northpoint counsel to FCC dated October 7, 1999 (page 6, 2nd full paragraph).

4 October 1999 Report at 5.

at a distance of more than 1.2 miles from the Northpoint transmitter. As Northpoint rightly points out[5] the relationship between interference and distance from the Northpoint transmitter is a simple predictable characteristic; the interference level varies inversely as the square of the distance. Therefore, had EchoStar been able to measure the interference at 0.6 miles from the Northpoint transmitter (which was unfortunately in the middle of the Potomac River) the measured interference would have been 4 times (or 6 dB) higher. Northpoint claims to have performed tests at shorter distances from the test transmitter by obtaining federal and other permits (which of course DIRECTV and EchoStar did not have the time to receive), and we will address these measurements in our more detailed response to the October 1999 Report.

While on the one hand EchoStar is relieved by the proximity of the Potomac River and uninhabited federal lands to Northpoint's transmitters, as it minimized the disruption of DBS service to actual customers, <u>it is entirely inappropriate for Northpoint to draw any conclusions from these tests relating to the lack of any known actual complaints of harmful interference from EchoStar subscribers</u>.

3. The Northpoint measurement campaign appears to have placed great importance on the measurement of BER (Bit Error Rate) in the DBS receivers, on the presumption that this is the sole indicator of harmful interference. This simplistic approach to assessing the interference from a planned Secondary service to an operating Primary service is completely wrong, and ignores the fundamental aspects of digital RF links (whether they be satellite or terrestrial). These links need, and must have, adequate link margin to provide the required level of service to the customers. This issue is so fundamentally important that we will spend some time discussing it here.

   Northpoint would have us believe that, as long as the Northpoint interference does not force the DBS receiver below threshold (where the BER is suddenly reduced), even in clear-sky conditions, then the interference should be acceptable. Northpoint's argument is essentially that harmful interference only occurs when the interference reaches these levels under clear sky conditions. As an example of how ludicrous this is, let us consider a DBS link that has a clear sky margin of 6 dB above threshold. If the Northpoint interference reduces the clear-sky link margin by say 5.5 dB to a value of 0.5 dB above threshold, the Northpoint approach would conclude that this interference level should be acceptable. In practice such an interference level would reduce the <u>availability</u> of the DBS link from approximately 99.8% to approximately 97%. This would mean that for 3% of the year the link would be below threshold and the DBS subscriber would have no service. 3% of the year amounts to 263 hours per year or, on average, 43 minutes per day, which would be a totally unacceptable service quality. If this level of service were acceptable then DBS operators would have implemented significantly lower satellite EIRP levels, by almost 6 dB, thereby allowing four times as many transponders per satellite than are currently possible, with huge savings.

   Clearly, something is wrong with the Northpoint approach to interference. Northpoint

---

[5] Letter from Northpoint counsel to FCC dated October 7, 1999 (page 6, 1st full paragraph).

repeatedly refuses to consider the availability of the individual DBS links in its assessment of interference. DBS operators have spent billions of dollars in the form of high power satellites just to achieve the required link availability for all of their subscribers (not just *average* availability as Northpoint suggests). Northpoint argues that the DBS individual link availability is of no consequence and that everything will be fine as long as the Northpoint interference does not cause the DBS receiver to go below threshold when tested under clear sky conditions.

Therefore it is absolutely essential that the FCC takes into account the DBS individual link availability in any assessment of whether the interference from a proposed Secondary service is harmful or not. It is no coincidence that reduction in link availability is the fundamental measure used by the ITU (and the FCC) in assessing the acceptability of interference levels from the proposed NGSO systems. This matter is addressed further in section 6 below.

3 Summary Description of the EchoStar/DIRECTV Measurements Made During the Northpoint Transmission Tests

As the Commission is aware DIRECTV and EchoStar have conducted field measurements of interference during some of the period when Northpoint was transmitting test signals from the experimental transmit site in Rosslyn, VA. These measurements are described in detail in Annex 1.

The measurements consistently recorded harmful interference over two days, August 11th and 12th, and again on September 8th, on transponder 18 (Ku frequency 12.47186 GHz) of EchoStar's satellite located at 61.5° W.L. This interference was measured at the "polo field" -- an area in the Northeast corner of West Potomac Park just south of Independence Avenue and about 1/3 mile south of the Lincoln Memorial. This location is approximately 1.2 miles from the Northpoint test transmitter in Rosslyn, VA.

The Northpoint interference was measured by means of the DBS receiver signal strength meter, in conjunction with a spectrum analyzer and associated equipment. The clear-sky signal strength readings during these days were consistent with values of 93 (August 11), 93 (August 12) and 94 (September 8). With the Northpoint transmitter turned on, however, the signal strength was reduced to 90 (August 11 and 12) and 86 (September 8). This corresponds to signal strength degradation as high as 8 counts. The differences of the data measurements between August 11 and 12 and the measurements on September 8 appears to be due to the fact that the DIRECTV test antenna, which was located immediately adjacent to the EchoStar antenna, was shielding the Northpoint interference on August 11 and 12, and it was therefore removed prior to the September 8 measurement.

The EchoStar receiver signal strength meter was carefully calibrated during the tests so the 8 point reduction in the meter reading, due to Northpoint interference, was verified as being equivalent to approximately 2.1 dB reduction in the signal-to-noise ratio of the EchoStar signal. As shown in Annex 1 this level of interference can be equated to a C/I in clear-sky conditions of approximately 16 dB.

There are several important points to note concerning this level of measured interference, as follows:

- The interference level closer to the transmitter will vary inversely as the square of the distance. Therefore, at a distance of 0.6 mile the interference would be 6 dB higher (C/I = 10 dB, link degradation = 5.3 dB), and at 0.3 mile the interference would be 12 dB higher (C/I = 4 dB, link degradation = 10.1 dB). Of course these latter two cases could not be measured because they would have been located in the Potomac River.

- Because of the unknown factors about the Northpoint test transmissions, as discussed in section 2 above, we cannot be certain that the measured interference levels are the worst that existed. There could well be locations with even higher levels of interference.

4 Analysis and Conclusions Based on the EchoStar/DIRECTV Measurements

In this section we will demonstrate the effect that the measured Northpoint interference has on the EchoStar DBS service from the 61.5° W.L. satellite for subscribers in Washington D.C.

Table 1 gives a detailed link budget for EchoStar DBS service to Washington D.C. from the EchoStar satellite at 61.5° W.L. This is the "best case" link budget in that it represents the situation where the DBS receive antenna is perfectly aligned to the satellite, and the satellite is providing the EIRP levels as currently measured (i.e., "beginning of life"). This link budget is therefore applicable to the actual EchoStar test set-up at the "polo field" during the Northpoint test transmissions.

The link budget in Table 1 shows four cases in the four data columns (some of the entries are common across all four columns). The first two data columns show the situation without Northpoint interference, with one column for clear-sky conditions and one column for rain faded conditions. The two right hand columns show the situation as it exists with the Northpoint interference levels that were actually measured at the polo field. The Northpoint interference levels are entered into the link budget as a clear-sky C/I of 16.0 dB, and as a rain-faded C/I of 13.75 dB (assuming that there is negligible rain attenuation on the short interference path).

From Table 1 note that the clear-sky margin is reduced by 2.0 dB from 6.1 dB to 4.1 dB due to the Northpoint interference. Under these conditions the link will support a 3.0 dB rain attenuation (99.893% availability) without Northpoint interference and 2.25 dB rain attenuation (99.803% availability) with Northpoint interference. The link unavailability is therefore increased from 0.107% (i.e., 100%-99.893%) to 0.197% (i.e., 100%-99.803%), which is an increase in unavailability of 84.1%, far in excess of the aggregate allowance for all NGSO systems which is 10%. The more conventional measure for assessing interference for static situations is the increase in system noise temperature ($\Delta T/T$), which is also calculated in Table 1. In this case the $\Delta T/T$ is 57.4%, almost ten times greater than the standard criterion for acceptable interference between co-Primary services, which is a $\Delta T/T$ of 6%.

Table 1 - Link Budget – Washington D.C. – Best Case

Link Parameters		Without Northpoint		With Northpoint	
		Clear Sky	Rain	Clear Sky	Rain
Link Geographical Characteristics:					
Satellite Longitude	(°East)	-61.5			
Rx E/S Longitude	(°East)	-77.0			
Rx E/S Latitude	(°North)	38.5			
Rx E/S Altitude (AMSL)	(km)	0.010			
Rx E/S ITU Rain Zone	(ITU)	K			
Rx E/S Range to Satellite	(km)	37,588			
Rx E/S Elevation to Satellite	(°)	42.6			
Downlink (per carrier):					
Carrier Frequency	(GHz)	12.450			
EIRP per Carrier towards Rx E/S	(dBW)	52.2			
Clear-Sky Atmospheric Losses	(dB)	0.50			
Rain Attenuation	(dB)	0.00	3.00	0.00	2.25
Free Space Loss	(dB)	205.8			
Rx E/S Antenna Diameter	(m)	0.45			
Rx E/S Antenna Gain (69% eff.)	(dB)	33.8			
Rx E/S Pointing and Other Losses	(dB)	0.0			
Receive Power	(dBW)	-120.4	-123.4	-120.4	-122.6
Rx Noise Temperature	(K)	85			
Sky Noise Temp	(K)	32	160	32	136
(C/T) Thermal Downlink	(dBW/K)	-141.1	-147.3	-141.1	-146.1
Total Link:					
Carrier Noise Bandwidth	(kHz)	24,000			
(C/N) - Thermal Uplink	(dB)	33.0			
(C/N) - Thermal Downlink	(dB)	13.7	7.5	13.7	8.7
(C/I) - Other BSS Assignments	(dB)	30.0			
(C/I) - Northpoint Interference	(dB)	100	100	16.00	13.75
(C/N) - Total Actual	(dB)	13.6	7.5	11.6	7.5
(C/N) - Total Required	(dB)	7.5			
Margin	(dB)	6.1	0.0	4.1	0.0
Resulting Availability using ITU Rain Model	(%)	99.893		99.803	
Increase in Unavailability due to Northpoint Interference	(%)	84.1			
Increase in System Noise Temp due to Northpoint Interference (ΔT/T)	(%)	57.4			

A reliable DBS system needs margin, not only to compensate for rain attenuation but also to allow for other factors which degrade the link, such as mispointing of the DBS receive antenna and other degradations of the DBS antenna and receiver performance over time, as well as degradation of the satellite High Power Amplifier (HPA) over the lifetime of the satellite. These factors must be taken into account when offering a reliable long-term service to millions of low-cost DBS receiver installations. Table 2 shows a link budget, applicable to the

Washington DC receive location, for the situation where these real-life factors are taken into account, resulting in a link that achieves the minimum 99.7% availability objective. We refer to this link budget as the "marginal case" (compared with the "best case" link given in Table1).

In Table 2 the satellite EIRP is reduced by 0.6 dB to represent lifetime degradation, a 1 dB factor is included to take account of receive antenna mispointing and the receive system noise temperature is assumed to be 15 K higher than in the best case. Under these conditions the link achieves the assumed target availability of 99.7%. When the measured Northpoint interference is included the link availability is reduced to 99.235%, which is a 155% increase in unavailability for the EchoStar service. The $\Delta T/T$, resulting from the Northpoint interference, is 51.6%, still almost nine times greater than the well established 6% criterion.

Note that the C/I for the Northpoint interference in Table 2 is set to be 1.6 dB lower than in Table 1, to reflect the fact that the wanted signal is 1.6 dB lower. This correctly assumes that the interfering signal power is the same for the marginal case as it was for the best case link budget.

Table 2 - Link Budget – Washington D.C. – Marginal Case

Link Parameters		Without Northpoint		With Northpoint	
		Clear Sky	Rain	Clear Sky	Rain
Link Geographical Characteristics:					
Satellite Longitude	(°East)	-61.5			
Rx E/S Longitude	(°East)	-77.0			
Rx E/S Latitude	(°North)	38.5			
Rx E/S Altitude (AMSL)	(km)	0.010			
Rx E/S ITU Rain Zone	(ITU)	K			
Rx E/S Range to Satellite	(km)	37,588			
Rx E/S Elevation to Satellite	(°)	42.6			
Downlink (per carrier):					
Carrier Frequency	(GHz)	12.450			
EIRP per Carrier towards Rx E/S	(dBW)	51.6			
Clear-Sky Atmospheric Losses	(dB)	0.50			
Rain Attenuation	(dB)	0.00	1.83	0.00	1.12
Free Space Loss	(dB)	205.8			
Rx E/S Antenna Diameter	(m)	0.45			
Rx E/S Antenna Gain (69% eff.)	(dB)	33.8			
Rx E/S Pointing and Other Losses	(dB)	1.0			
Receive Power	(dBW)	-122.0	-123.8	-122.0	-123.1
Rx Noise Temperature	(K)	100			
Sky Noise Temp	(K)	32	120	32	90
(C/T) Thermal Downlink	(dBW/K)	-143.2	-147.2	-143.2	-145.9
Total Link:					
Carrier Noise Bandwidth	(kHz)	24,000			
(C/N) - Thermal Uplink	(dB)	33.0			
(C/N) - Thermal Downlink	(dB)	11.6	7.6	11.6	8.9
(C/I) - Other BSS Assignments	(dB)	30.0			
(C/I) - Northpoint Interference	(dB)	100	100	14.40	13.28
(C/N) - Total Actual	(dB)	11.5	7.5	9.7	7.5
(C/N) - Total Required	(dB)	7.5			
Margin	(dB)	4.0	0.0	2.2	0.00
Resulting Availability using ITU Rain Model	(%)	99.700		99.235	
Increase in Unavailability due to Northpoint Interference	(%)	155.0			
Increase in System Noise Temp due to Northpoint Interference (ΔT/T)	(%)	51.6			

The key results obtained in Table 2 above are shown in Figure 2 as a function of the distance of the EchoStar receiver from the Northpoint transmitter. The scaling with distance has been based, consistent with Northpoint's statements,[6] on the assumption that the interference level will vary inversely as the square of the distance from the Northpoint transmitter, using the measured interference levels at (conservatively) 1.2 mile distance as the reference point.

---

[6] Letter from Northpoint counsel to FCC dated October 7, 1999 (page 6, 1st full paragraph).

The solid line in Figure 2 (see left hand axis for scale) shows the resulting EchoStar availability, which drops dramatically below approximately 1 mile to the point where the EchoStar service is unavailable at approximately 0.7 mile. At this distance the interference from the Northpoint transmitter causes such degradation to the EchoStar link that there is no margin left, even in clear-sky conditions, and the EchoStar link fails to operate.

The dotted line in Figure 2 (see right hand axis for scale) shows the increase in the unavailability of the EchoStar link as a result of the introduction of the Northpoint interference. The increase is already 100% (i.e., ten times more than the aggregate NGSO interference criterion) at a distance of approximately 1.3 miles, and rises steeply to 1000% at a distance of approximately 0.9 mile. Even for a distance of 3 miles the increase in unavailability is approximately 13%, still greater than the aggregate NGSO interference criterion of 10%.

Figure 2 - Northpoint Interference to EchoStar Receivers – Washington DC

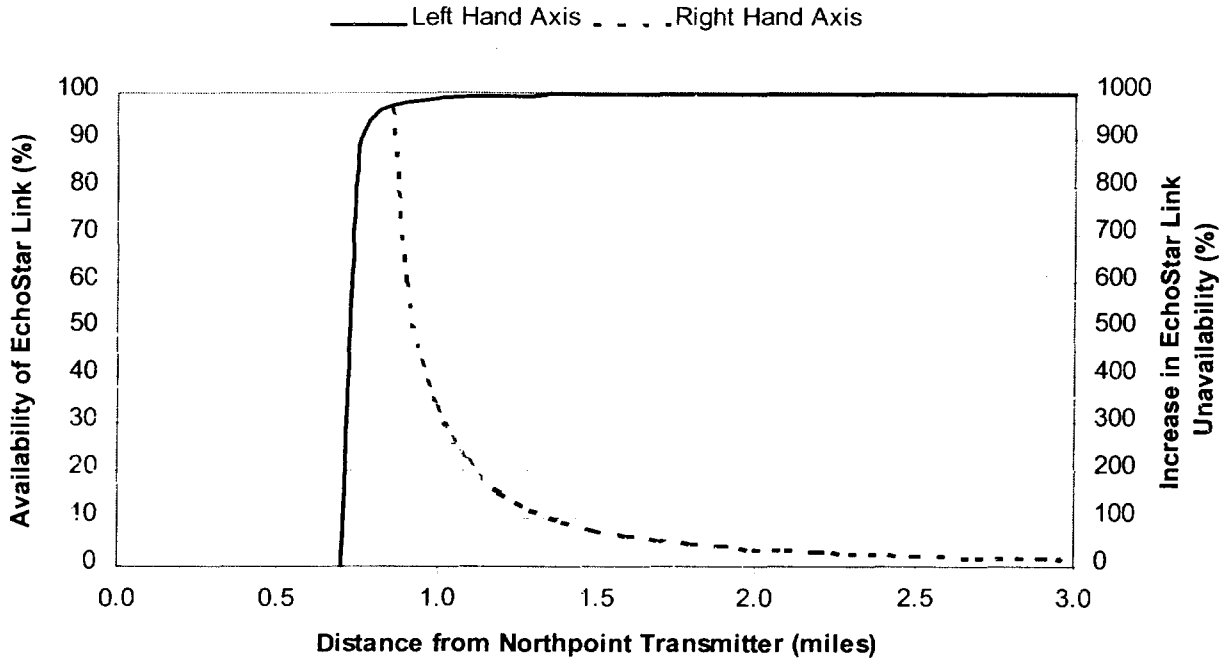

In Figure 3 the ΔT/T of the EchoStar receiver, as a result of the Northpoint interference, is shown, also as a function of the distance of the receiver from the Northpoint transmitter. The scaling with distance is the same as that used in Figure 2 above. The reference point for this data is the ΔT/T value of 51.6% for the case of 1.2 mile distance, as derived in Table 2 above. The normally accepted interference criterion, in the case of co-Primary services, is a ΔT/T value of 6%. Even at a distance of 3 miles, the Northpoint interference causes a ΔT/T of approximately 8%.

Figure 3 - EchoStar Receiver ΔT/T Caused By Northpoint Interference

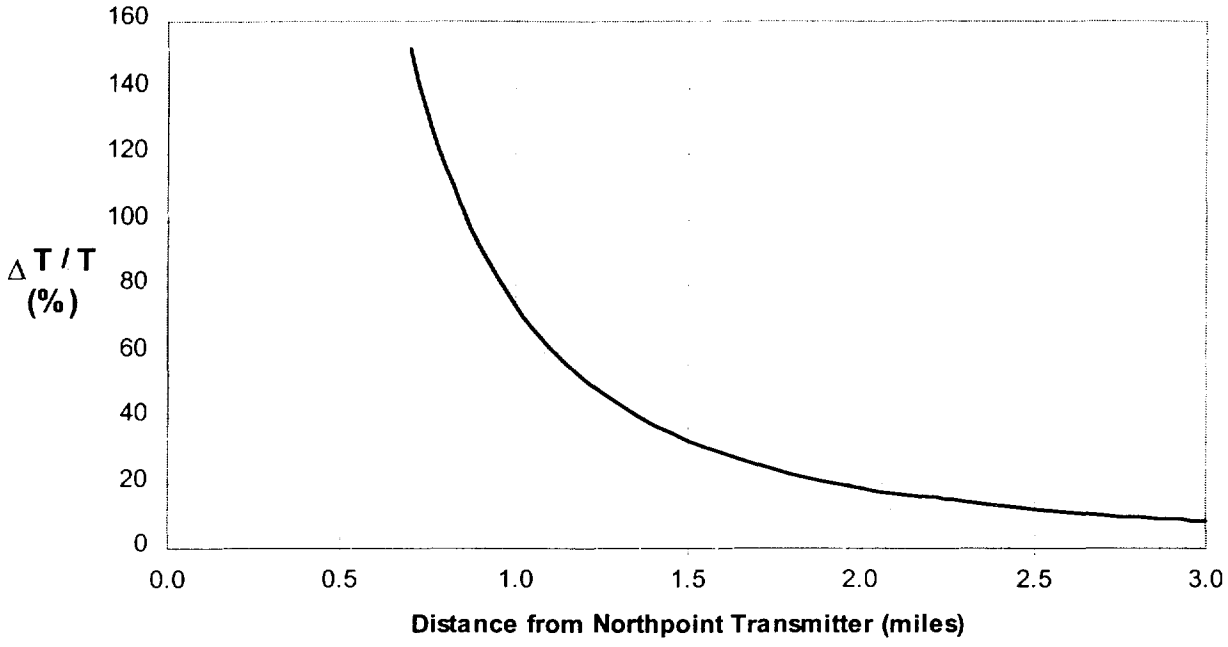

EchoStar will soon submit an analysis using the limited observations that were possible during the Northpoint experiment to measure the effect from Northpoint's operations on EchoStar's DBS service in other U.S. cities.

Conclusions

The DIRECTV/EchoStar measurements of interference show conclusively that the proposed Northpoint system would cause harmful interference to EchoStar subscribers at distances of several miles from the Northpoint transmitters. The effect of this interference will vary at different locations across the USA depending on the rain margin that exists on the EchoStar links at those locations. These variations in rain margin have been deliberately designed into the EchoStar system in order to closely match the climatic regions of the USA. Drier regions of the USA will suffer significantly greater from Northpoint interference than the Washington DC situation that was measured.

The results presented here are based on limited measurements made by EchoStar in the Washington DC area. For various reasons associated with Northpoint's selection of its test transmitter site, EchoStar was unable to comprehensively measure the Northpoint interference for a range of possible interference geometries. Therefore we cannot be certain that the results presented here represent the worst interference levels that existed. It is quite possible that even higher levels of interference could exist in practical situations.

The measured results, and the conclusions based on further analysis, should come as no surprise. EchoStar and other parties have consistently informed the FCC that the introduction of a ubiquitous terrestrial service, such as the proposed Northpoint one, into the frequency bands already in use for DBS services, is simply not practical. The resulting interference to the incumbent Primary DBS service would be disastrous and the billions of dollars of investment already made by the DBS operators would be effectively wasted.

5 Need for Further Controlled Measurements to Better Demonstrate the Impact of the Proposed Northpoint Transmissions on the Operating DBS Services

The conclusions drawn in this report have a weakness: we cannot be certain that the actual interference levels that might occur if the Northpoint system were ever deployed would not be higher than those measured here. On the other hand, we know, with a high degree of confidence, that they will never be lower. This weakness is a direct result of the poorly defined and controlled test transmissions that Northpoint has conducted, and the deliberate choice by Northpoint of a test site and test arrangement that conceals the true interference that would occur in practice.

In light of this fact, EchoStar believes that further tests would more accurately define and demonstrate the actual interference levels that would occur in a real-life deployment scenario. However, EchoStar also believes that the evidence presented here, together with the previous submissions to the Commission by the DBS operators and their proponents, demonstrates already the incompatibility of the proposed Northpoint system with the fully operational DBS systems.

Further tests should be based on the following principles:

1. The DBS operators should be in control of the test transmitter so they fully understand its technical characteristics, and the features of the test installation.

2. The test transmitter should use the actual Northpoint transmit antenna so as to ensure that its sidelobe characteristics are truly representative of the antennas Northpoint is proposing to deploy. Northpoint should define the possible pointing directions and the beam tilt for this antenna that are the basis of their proposed system.

3. The site chosen for the test transmitter should be one that permits full access up to quite close range for the DBS test receivers in all azimuth directions (some exceptions to this could be permitted provided they were for very limited ranges of azimuth directions).

4. The structure on which the test transmit antenna is installed should be such that there is no building blockage in any azimuth direction and for quite high elevation angles from the DBS test antennas to the test transmitter (some exceptions could be permitted provided they were for very limited ranges of azimuth directions).

6 Response to Northpoint Letter to FCC Dated October 7, 1999

Many of the points raised by Northpoint in its letter to the FCC have been addressed in some detail above. These will be reiterated here for completeness. In addition, the following section will address all the other points of contention arising from the Northpoint letter.

- Northpoint's refusal to consider significant loss of link availability as harmful interference goes against all common sense and normal engineering practice.[7] It sets the scene for a whole new regime whereby Secondary services could be introduced in bands where there are incumbent Primary services, cause devastation to the reliability of those services, and still not be considered as causing harmful interference.

- Northpoint's assertion that "... *the "peak" signal strength recorded by the consumer set top box is a transient value well above the average value of the signal strength indicator* ..."[8] is simply incorrect. As Northpoint and its engineers well know, rain attenuation, which causes the more significant link attenuation (compared with that due to clouds alone) is a phenomenon with a well known statistical pattern, whether it be on a satellite or a terrestrial radio link. The effect of these statistics is that the link attenuation is very low for large percentages of the time, and therefore the signal strength meter on a DBS receiver will in fact be near to the peak value for the vast majority of the time. As an illustration of this, for an EchoStar DBS receiver located in the Washington DC area and receiving signals from the EchoStar satellite at 61.5° W.L., the rain attenuation will be less than 0.5 dB for 96.8% of the time, and less than 1 dB for 99.0% of the time (based on ITU rain models). This means that the signal strength meter reading will only drop more than 0.5 dB below peak for an average of 46 minutes in a 24 hour period, and more than 1 dB below peak for an average of 14 minutes in a 24 hour period. In fact the <u>average</u> rain attenuation (i.e., for 50% of the time) is a small fraction of a dB, and so the Northpoint statement cited above is completely untrue and very misleading.

  Northpoint also suggests that there could be significant fluctuation in the received signal level from the satellite due to variations in the EchoStar receive antenna orientation. This is simply not the case. The test antenna was a standard 45 cm diameter one, and therefore insensitive to any small variations in the pointing of the antenna. The test antenna was carefully pointed to the EchoStar satellite and consistently gave the same signal strength meter readings in the absence of Northpoint interference.

  It is therefore highly unlikely that, between the consecutive measurements made by EchoStar of the Northpoint interference, the satellite signal path attenuation changed by any measurable amount, particularly in light of the fact that the weather was good

---

7 Letter from Northpoint counsel to FCC dated October 7, 1999 (page 4, last paragraph).

8 Letter from Northpoint counsel to FCC dated October 7, 1999 (page 5, 1st paragraph).

during the test results presented here. This statement is supported by the detailed measurement data given in Annex 1, and particularly by reference to Figure A-3 of that annex, where the exact timing of the signal strength meter readings is given. It can be seen that the measurements were made at approximately two to three minute intervals,[9] and the signal strength meter reading returned to the peak level immediately after the Northpoint interference occurred, on both occasions when the Northpoint transmitter was turned on during the test period.

In conclusion, the EchoStar measurements are not concealing any inherent variation in the received signal level from the satellite, but clearly demonstrate the effect of the Northpoint interference alone.

- Northpoint also questions whether in fact the Northpoint transmitter was turned on at times when claimed DIRECTV and EchoStar claim they measured Northpoint interference.[10] As explained in Annex 1, EchoStar took great care in its measurements to ensure that it knew when the Northpoint transmitter was turned on and when it was off. A special Northpoint monitoring antenna was set up which clearly showed the Northpoint signal spectrum on a spectrum analyzer whenever the Northpoint transmitter was turned on. For this reason it was not necessary for DIRECTV and EchoStar to contact Northpoint (or DCE) during the tests to request that the Northpoint transmitter be turned on or off.

  There is therefore no doubt that the interference measured by the DBS operators was due to the Northpoint transmissions, and that alone. Northpoint's statement that "... *it is possible (probably likely) that the data was not in fact collected when the Northpoint transmitter was on and then off* ..." [11] is completely unfounded and factually incorrect.

- Northpoint suggests that the measurements reported here were based on "simulated" interference using an additional reflector to redirect the interfering signal into the EchoStar antenna. This is not the case. Annex 1 reports on the use of an aluminum shield that was used to <u>block</u> the interfering signal path, as an additional means of verifying the source of the interference. This shield was not used when the actual measurement of the Northpoint interference level was made.

- Northpoint makes an argument in its letter that suggests that harmful interference should be considered to be acceptable if it only occurs in a small part of the service area.[12] This is a totally unacceptable philosophy and the Commission should firmly

---

9 This fact confirms that Northpoint's claims that "... *it is likely that the DBS data for "Northpoint on" and "Northpoint off" was collected several hours apart* ..." is completely incorrect.

10 Letter from Northpoint counsel to FCC dated October 7, 1999 (page 5, 2nd and 3rd full paragraphs).

11 Letter from Northpoint counsel to FCC dated October 7, 1999 (page 5, last paragraph).

12 Letter from Northpoint counsel to FCC dated October 7, 1999 (page 6, 1st full paragraph).

reject this notion.[13] The DBS satellite service exploits one of the greatest assets of communications satellites - the ability to provide ubiquitous service of the same high quality over the entire service area. To suddenly take away this key feature would be devastating for the DBS service operators. The harmful levels of unacceptable interference have been shown in this report to occur up to several miles distance from the Northpoint transmitter. In a typical urban or suburban area, where it would be expected that numerous Northpoint transmitters are proposed to be located, the Northpoint transmissions would cause harmful interference to large numbers of DBS subscribers – a totally unacceptable situation.

- We are in agreement with Northpoint regarding its observation that West Potomac Park, where the EchoStar interference tests were performed, is uninhabited (from a DBS subscriber point of view).[14] Again, the illusory expectation that NorthPoint could likewise locate all of its transmitters in deserted areas or close to rivers in the midst of the densely populated areas it wants to serve cannot be a rational basis for nationwide licensing.

- Northpoint states that "... *Emboldened by their* <u>*inconsistent*</u> (emphasis added) *and* <u>*erroneous*</u> (emphasis added) *data, the DBS operators then proceed to draw conclusions about the impact of the Northpoint system on DBS as a whole ...*" [15]. The results presented in this report are neither <u>inconsistent</u> nor <u>erroneous</u>, as is evidenced by the detailed measurement data and careful analysis presented here. Neither are our conclusions inappropriate concerning the impact of the Northpoint interference on the DBS service as whole. The only extrapolation we have used beyond the actual measurement data is to assess the variation in interference level as a function of distance from the Northpoint transmitter. In drawing that inference, we have used the simple "inverse square of distance" propagation law that Northpoint itself makes reference to.[16] In summary there are no "leaps of faith" required to fully understand the EchoStar measurement results.

- Northpoint makes much about a semantic difference between "link margin" and "rain margin."[17] We agree that rain attenuation raises the receive system noise temperature of the DBS link, and we have never claimed otherwise. Indeed this factor is fully

---

13 Neither is it clear that such harmful interference would occur in only a small part of the service area, especially in a situation where multiple Northpoint transmitters were operating to provide contiguous Northpoint service across the Northpoint service area.

14 Letter from Northpoint counsel to FCC dated October 7, 1999 (page 6, 2nd full paragraph).

15 Letter from Northpoint counsel to FCC dated October 7, 1999 (page 6, 3rd full paragraph).

16 Northpoint states that "... *DBS undoubtedly knows that simple attenuation of the Northpoint signal as it travels through space ...*" in the letter from Northpoint counsel to FCC dated October 7, 1999 (page 6, 1st full paragraph).

17 Letter from Northpoint counsel to FCC dated October 7, 1999 (pages 6 and 7).

taken account of in all the link budgets presented above. Nevertheless, even with this factor included the harmful interference due to Northpoint interference is a reality and occurs at the levels given above.

- Again Northpoint makes a completely inaccurate statement that "... *the DBS operators base a 0.5 dB link degradation on an interpretation of the signal strength pointer which has no basis in fact ....*"[18] The signal strength meter of the EchoStar test receiver was carefully calibrated, as explained in Annex 1, and it is a perfectly accurate way of measuring the DBS link degradation due to the Northpoint interference. The calibration curve in Figure A-4 of Annex 1 is quite linear, and gives accurate relative C/N measurements within a very small fraction of a dB. As Annex 1 shows, the link degradation measured under essentially clear-sky conditions was 2.1 dB (not 0.5 dB as Northpoint suggests), a value that is much greater than the possible error of the measurement set-up.

- Northpoint essentially argues the interference criterion applied to NGSO interference (i.e., 10% increase in unavailability of the DBS link) is totally inappropriate for use in assessing the allowable interference from Northpoint.[19] Secondary services are, by definition, services that are not expected to significantly interfere with Primary services. Northpoint's argument that it would be within its bounds as a Secondary service provided it does not cause "serious degradations or repeated interruptions" to a DBS link <u>under clear-sky conditions</u> is complete nonsense. It is equally possible for the DBS operator to unequivocally demonstrate that there will be times for all DBS receivers when they are critically near to losing signal (due to rain fades), and the introduction of the Northpoint interference forces the DBS receiver to lose signal. Clearly in this case the Northpoint interference is causing a "serious degradation" of the DBS link, and therefore is rightfully judged as causing harmful interference. Therefore it is necessary to move beyond the simple definition of harmful interference in order to determine acceptable levels of interference, and this is the reason why interference criteria, such as the one applicable to NGSO, have been developed.

- Northpoint resorts to some necessarily creative ideas when suggesting that perhaps the 10% increase in unavailability criterion could be interpreted as an <u>average</u> across all the DBS subscribers rather than a level to protect <u>all</u> subscribers [20]. Unfortunately the assertion that this is the way the criterion is used in the NGSO interference situation is completely wrong. The 10% criterion as applied to NGSO systems is supposed to be met for even the most disadvantaged DBS link, and this is the basis for the submission of <u>sensitive</u> DBS links to the ITU's Joint Task Group 4-9-11 which has been responsible for studying this matter. The reason for this is again that

---

18 Letter from Northpoint counsel to FCC dated October 7, 1999 (page 7, 1st full paragraph).

19 Letter from Northpoint counsel to FCC dated October 7, 1999 (page 7, 2nd paragraph).

20 Letter from Northpoint counsel to FCC dated October 7, 1999 (page 8, 1st paragraph).

DBS is a ubiquitous service that must be protected across its service area, and not just some percentage of it. If this "average" idea were to be accepted it would logically mean that a DBS subscriber has a 50% chance of getting the proper service quality that he expects, and which the DBS service provider offers -- a horrifying prospect for the DBS operator (and the subscriber).

- Northpoint correctly makes the observation that the interference from Northpoint is essentially constant with time, and is therefore unlike the time-varying NGSO interference [21]. This would indicate that a more conventional interference criterion, such as that used in the past for static interference situations, should be used. In this case the well-established $\Delta T/T$ criterion, which limits the interference to 6% of the clear-sky system noise temperature, could be a candidate criterion. Alternatively, the kind of interference criterion included in the ITU's Appendix S30 Plan, which limits the interference to a value that does not degrade the clear-sky C/(N+I) by more than 0.25 dB, may be more appropriate in this DBS scenario. However, it can easily be shown that the imposition of either of these two criteria would place much greater interference constraints on a service such as Northpoint. In fact, the DBS operators are being generous to Northpoint by even suggesting that the 10% unavailability criterion might be appropriate.

- Northpoint states [22] that the DBS operators erroneously reference international proceedings in their discussion of Appendix S30 which suggest that terrestrial systems should not operate in the 12.2 – 12.7 GHz. The existence of both BSS and terrestrial FS allocations in the international table of frequency allocations in the 12.2 -- 12.7 GHz band does not mean that BSS and FS services are compatible within the same service area and operating at the same frequency. It is well recognized internationally that the ITU Appendix S30 Plan for BSS does <u>not</u> support the use of terrestrial FS services in countries where assignments in the Plan are made for the provision of the BSS. The only reason there is a co-primary ITU allocation to the BSS and FS in this band is that certain countries were not assigned the entire 500 MHz of spectrum in the case of Regions 2 and 3, or the entire 800 MHz of spectrum in the case of Region 1. In countries where all the frequencies were not assigned for BSS that country is able to use those unassigned frequencies for other services such as FS, the MS (terrestrial mobile service) or BS (terrestrial broadcasting service), which are also allocated on a co-primary basis, but clearly not all compatible with each other on a co-frequency co-coverage basis. It is for this reason that the Appendix S30 interference criteria to protect the BSS from the terrestrial FS takes the form of a power flux density limit at the edge of the BSS service area. In the USA and in the countries that border the USA (Canada and Mexico) the entire 500 MHz, i.e. all 32 BSS channels, were assigned in the Appendix S30 Plan for the BSS and

---

21 Letter from Northpoint counsel to FCC dated October 7, 1999 (page 8, 2nd paragraph).

22 Letter from Northpoint counsel to FCC dated October 7, 1999 (page 8, last paragraph).

therefore terrestrial FS in these countries was never envisioned in the 12.2 – 12.7 GHz band.

7 Initial Summary Response to Northpoint "Progress Report – WA2XMY – Northpoint-DBS Compatibility Tests, Washington, D.C., October 1999"

This document, which was only recently made available, provides Northpoint's own measurement results and conclusions regarding the interference arising from the Northpoint tests in Washington DC. We will be providing a detailed response to this report as soon as possible, but in the meantime we will address here the fundamental failings in this report, which effectively destroy all of the arguments of Northpoint.

1. Northpoint's claims that they received no complaints from actual subscribers are meaningless.

   Northpoint's self-contradictions in this respect are alarming. On the one hand Northpoint claims that it deliberately constructed its test so that there were no inhabitants in the areas that would be most affected by harmful interference from the Northpoint test transmitter. Then Northpoint argues that the lack of subscriber complaints somehow vindicates its claim that the Northpoint system will not cause any problem to actual DBS subscribers if it were ever to be deployed across the USA. This inconsistency is remarkable, but it permeates throughout the entire story told by Northpoint.

2. Statistical averaging approach is completely invalid for assessing interference to the ubiquitous DBS service.

   Most of Northpoint's conclusions are based on the premise that statistical averaging is a suitable way to assess whether the Northpoint interference is acceptable or not. This is completely inappropriate for assessing the impact to the DBS service from a proposed Secondary ubiquitous service such as Northpoint. Earlier in this report we have explained the crucial importance to the DBS operator in offering a ubiquitous service, and we will not repeat those arguments again here. Statistical averaging is a totally invalid method for assessing harmful interference into ubiquitous users, as it would destroy the presumption that a subscriber can rely on the service quality offered by the DBS operator. Instead a subscriber could find that, in fact, the DBS dish service he has just purchased will not work reliably (if at all) where he has planned to install it. In such a situation the subscriber will take no comfort from the fact that other subscribers are in a better position.

3. Northpoint's refusal to consider impact of the Northpoint interference on the individual DBS link availability shows complete disregard for the well-established methods used by spectrum planners and communications engineers throughout the world.

   Northpoint is proposing a radically different approach to assessing compatibility between different radio services. Their approach completely ignores the fundamental measure of service quality in the service that would be interfered with, which is to determine the impact on the quality of the affected link. Northpoint is effectively saying that all the technical bases on which compatibility is normally assessed, both by the FCC and in other jurisdictions

throughout the world, are no longer appropriate. Instead a crude averaging across all the variables Northpoint can think of is the basis of the Northpoint proposal. It is not surprising that Northpoint has to resort to this, as their proposed system was clearly completely incompatible with DBS from the outset, necessitating this revolutionary stance.

Annex 1 Description of the EchoStar/ DIRECTV Tests Performed in Washington DC to Measure Northpoint Interference

A team of DIRECTV and EchoStar engineers monitored Northpoint's experimental transmissions in the Washington, D.C. area during the week of August 9 and the week of September 6, 1999. The tests were primarily performed at the "polo field" - a convenient location on the northeast corner of West Potomac Park, just south of Independence Avenue and about 1/3 mile south of the Lincoln Memorial. The coordinates of the polo field are Latitude 38°53.169'N and Longitude 77°02.631'W. The polo field test site was more than 1.2 miles to the south east of Northpoint's test transmitter which was located on top of the USA Today building in Rosslyn, VA.

Equipment Description

Figure A-1 gives the block diagram of the equipment used to calibrate the EchoStar integrated receiver decoder (model 4000) and to measure the Northpoint interference. This equipment consisted of an 18 inch (45 cm) DBS antenna, LNB (Low Noise Block Downconverter), IRD (Integrated Receiver Decoder) Model 4000, a two-way splitter, a video monitor and a spectrum analyzer. The DBS antenna was aligned with EchoStar's satellite located at 61.5°W.L. The LNB down-converted the 500 MHz R.F. signal from the 12.2-12.7 GHz band to an IF frequency range of 950-1450 MHz. The signal was then routed from the antenna/LNB to the IRD via a two-way splitter and 100 feet of RG-6 coaxial cable. The other output of the splitter was routed to a spectrum analyzer via 6 feet of RG-6 coaxial cable. A DC block and 50-to-75 ohm transformer were used on the input to the spectrum analyzer.

Figure A-1 - EchoStar Calibration System Block Diagram

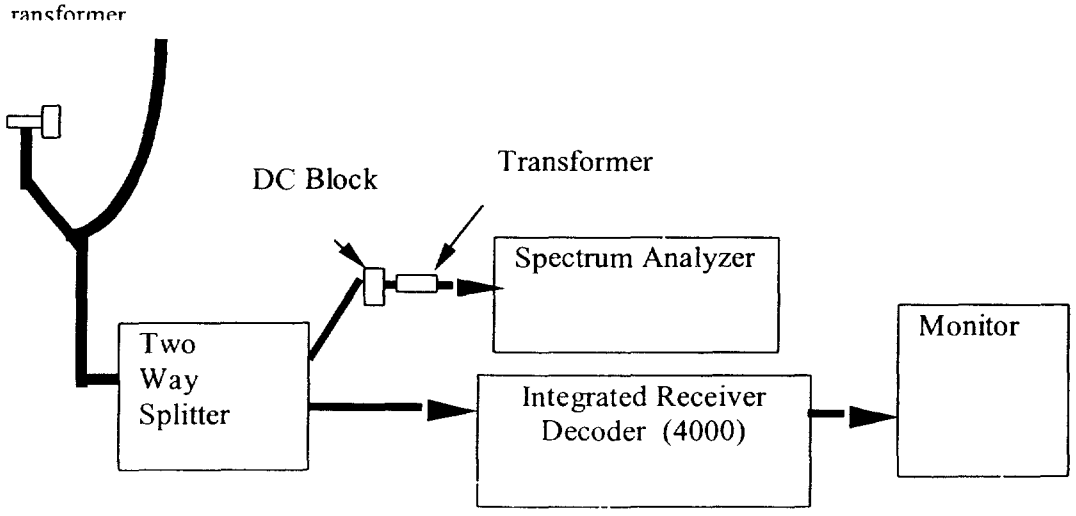

Calibration Procedure

Initially the intrinsic noise levels of the equipment were measured. Power levels were recorded, using a spectrum analyzer, for the spectrum analyzer noise floor, LNB noise floor and antenna noise threshold signal levels. The spectrum analyzer noise floor was measured with the input to the spectrum analyzer removed. The LNB noise floor was measured when the antenna was pointed well away from the 61.5°W.L. orbital position to clear sky. The spectrum analyzer settings used are summarized in Figure A-2. The measured spectrum analyzer and LNB noise floor values were approximately -73.5 dBm and -71.1 dBm for a 24 MHz bandwidth, respectively. The antenna signal strength reading was approximately 40 for these measurements where no satellite signal was present.

Figure A-2: Spectrum Analyzer Settings

Parameters	Settings
Start Frequency	950 MHz
Stop Frequency	1450 MHz
Video Bandwidth	100 Hz
Resolution Bandwidth	3.0 MHz
Span	100 MHz
Sweep	1.0 Sec

The EchoStar receiver signal strength meter was then calibrated as follows. Firstly, the EchoStar antenna pointing was adjusted to perfectly align with the 61.5°W.L. orbital position, and the carrier-to-noise (C/N) ratio was measured on the spectrum analyzer and recorded together with the signal strength meter reading. Then the EchoStar antenna was incrementally pointed away from the 61.5°W.L. orbital position and the changes in C/N ratio, and corresponding signal strength meter readings, were recorded. The results obtained are shown in Figure A-3.

Figure A-3: Calibration of the EchoStar IRD 4000 Signal Strength Meter

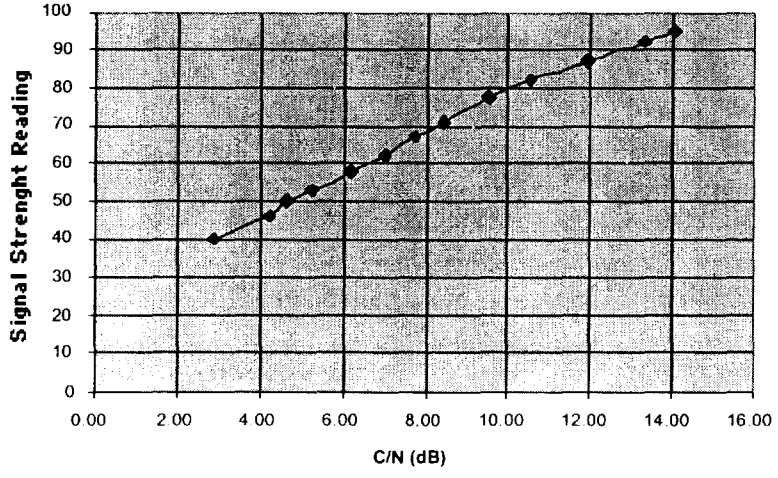

Interference Measurements

The EchoStar signal strength meter was used to measure the signal-to-noise ratio for the following three cases: (1) Northpoint transmitter OFF, (2) Northpoint Transmitter ON (with EchoStar antenna unshielded, (3) Northpoint transmitter ON (with EchoStar antenna shielded). The "shielded" case was measured using a large piece of aluminum material held up so as to completely block the possible Northpoint interfering signal from the EchoStar DBS antenna aperture.

The EchoStar signal strength meter readings from a sequence of measurements are given in Figure A-4. The initial signal strength reading was 93/94 (first three diamond shaped data points) with the Northpoint transmitter turned off. The signal strength degraded by approximately three counts when the Northpoint transmitter was turned on, unshielded (first two square shaped data points). When the Northpoint transmitter was shielded, the signal strength increased to the original signal strength of 93/94 (first triangular shaped data point).

Figure A-4: EchoStar Signal Strength Meter Readings (9/9/99)

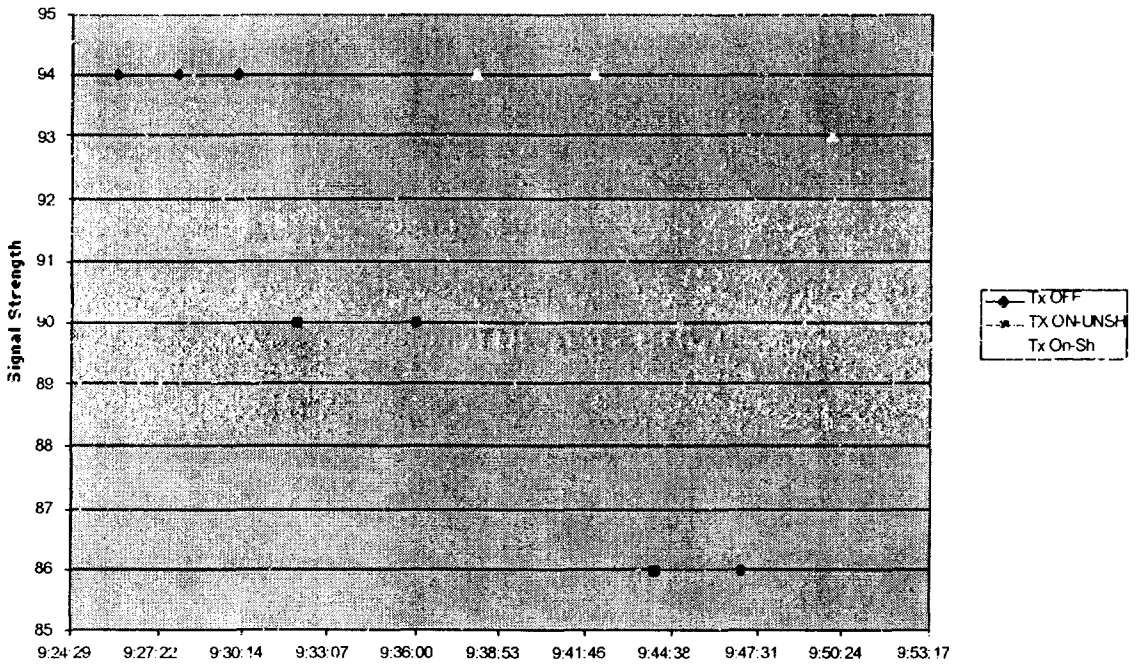

At this point it was realized that the DIRECTV antenna was possibly shielding the EchoStar antenna from the interfering Northpoint signals. The DIRECTV antenna was then removed from its antenna mount and the signal strength measurements were continued. The signal strength reading remained at 93/94 (second triangular shaped data point) with the Northpoint transmitter turned off. The signal strength then decreased to 86 (eight count decrease) when the Northpoint transmitter was turned on, unshielded (second two square shaped data points). When the Northpoint transmitter was then shielded, the signal strength meter reading returned to 93/94 (third triangular shaped data point).

It is not exactly clear why the signal strength meter readings differed for the cases when the Northpoint transmitter was turned on. Two plausible explanations of why the data changed could be either (a) the Northpoint transmit power was changed, or (b) the DIRECTV antenna was shielding the Echostar antenna from the highest level of interfering signal when it was mounted next to the EchoStar antenna. We believe it was due to the latter.

Using the calibration curve of Figure A-3, the C/N ratios were calculated for a range of signal strength meter readings from 95 down to 80. From these C/N values (which can also be considered as C/(N+I)), the C/N degradation due to the interference was calculated, and from this the carrier-to-interference (C/I) was calculated. These calculations are shown in Figure A-5 below. From this data it can be seen that an 8 point reduction in the signal strength meter reading is equivalent to a reduction in C/N (from 13.8 to 11.7 dB) of 2.1 dB, which results from a C/I of 16.02 dB.

Figure A-5: Calculation of C/I Based on Signal Strength Meter Reading

Count Change	Signal Strength	C/N	C/N dedradation	Derived C/I (dB)
	95	14.03		
	94	13.8		
-1	93	13.5	0.3	26.68
-2	92	13.3	0.5	22.90
-3	91	13	0.8	21.40
-4	90	12.8	1	19.75
-5	89	12.5	1.3	18.88
-6	88	12.2	1.6	17.77
-7	87	11.9	1.9	16.84
-8	86	11.7	2.1	16.02
-9	85	11.4	2.4	15.52
-10	84	11.1	2.7	14.83
-11	83	10.8	3	14.19
-12	82	10.5	3.3	13.60
-13	81	10.25	3.55	13.05
-14	80	10	3.8	12.61

CERTIFICATION OF PERSON RESPONSIBLE FOR PREPARING ENGINEERING INFORMATION

I hereby certify that I am the technically qualified person responsible for preparation of the engineering information contained in the foregoing submission, that I am familiar with Part 100 of the Commission's rules, that I have either prepared or reviewed the engineering information submitted in this pleading, and that it is complete and accurate to the best of my knowledge and belief.

Richard Barnett

Richard J. Barnett, PhD, BSc
Telecomm Strategies, L.L.C.
4806 Fort Sumner Drive
Bethesda, Maryland 20816
(301) 229-0204

Dated: October 28, 1999