USWEST

INFORMATION TECHNOLOGIES

Current Processing Flow

USWEST

INFORMATION TECHNOLOGIES

Current Processing Flow

- Order Processing
  - OBF-Standard CLEC Request (LSR)
  - End User and Central Office (CFA) Termination
  - Normal Service Order flow and control
- Provisioning
  - Loop and Central Office Equipment (COE) inventory
  - Loop Qualification and Assignment
  - Dispatch in/out for connections
- Repair Call processing
  - Single Process
- Billing
  - End user or Co-Provider billing

USWEST

INFORMATION TECHNOLOGIES

Processing Flow with Line Sharing and the Changes Needed to Support it.

USWEST

INFORMATION TECHNOLOGIES

Future Processing Flow in Line Sharing Environment

- Order Processing
  - No OBF standards for request
  - End User, Voice (COE), and Data (CFA) Terminations
  - Service Order flow and control - Coordinated cut-over
- Provisioning
  - Inventory and assign to 3 (possibly more), locations dependent upon type of splitter or other equipment in the central office.
  - New assignments on existing facilities
  - Dispatch in to move and reconnect Voice/connect Data
  - Dispatch out for connections, with ILEC/DLEC coordination
- Repair Call processing
  - Separate processes to repair Voice and Data
- Billing
  - Both End user and Co-Provider billing

USWEST

INFORMATION TECHNOLOGIES

US West Current Configuration

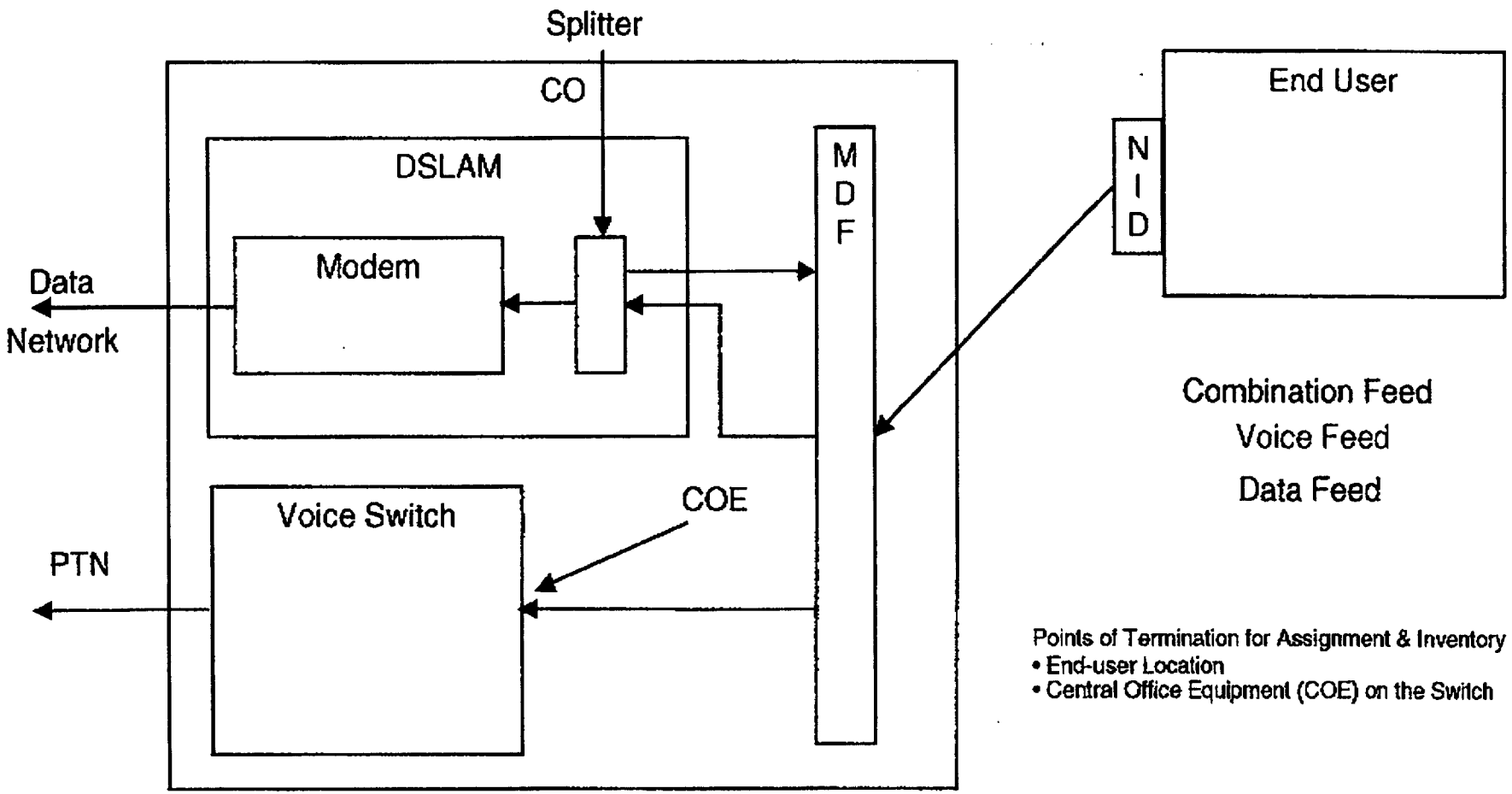

Points of Termination for Assignment & Inventory
- End-user Location
- Central Office Equipment (COE) on the Switch

USWEST

INFORMATION TECHNOLOGIES

Shared Line Configuration

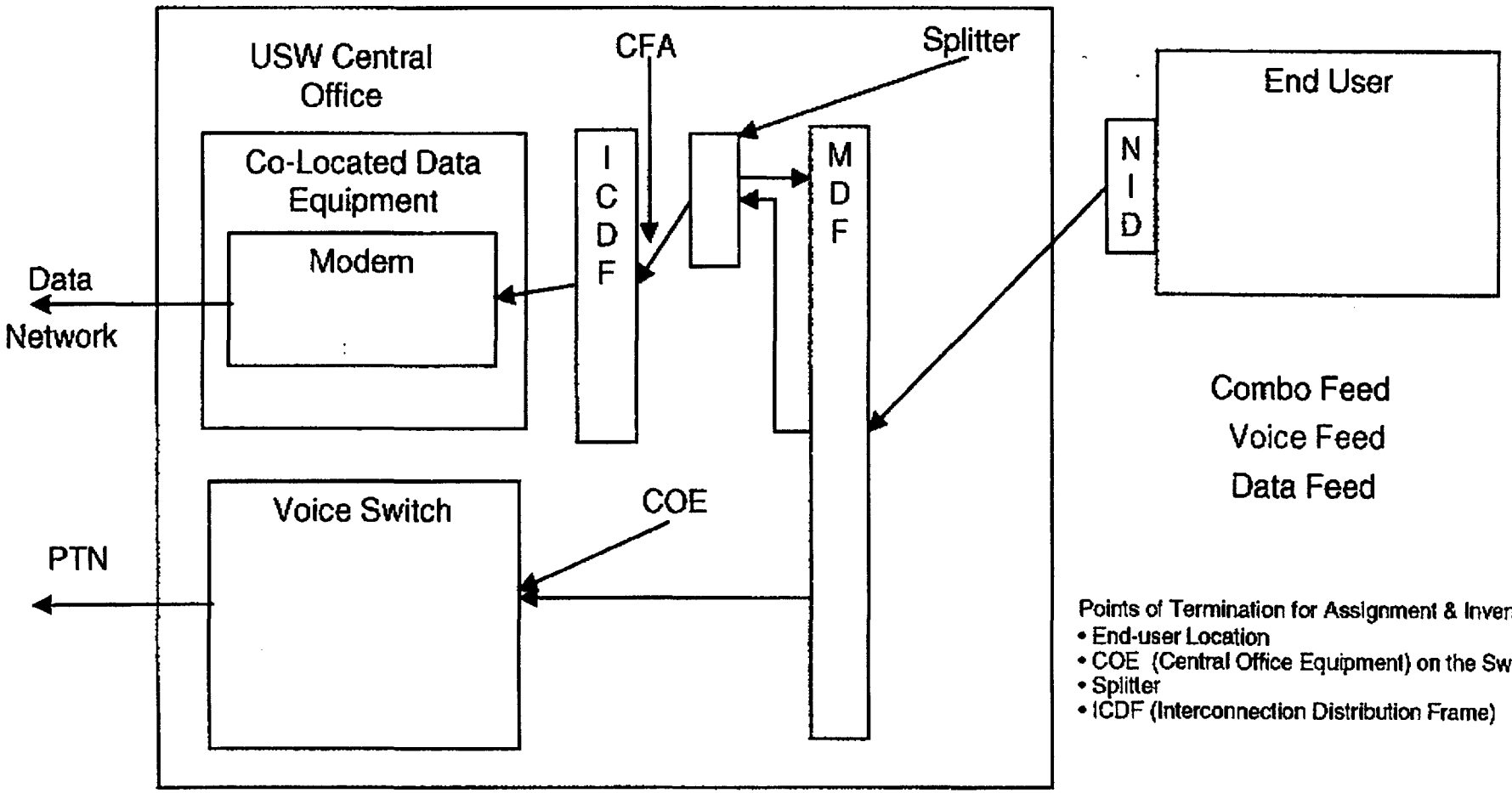

Points of Termination for Assignment & Inventory
- End-user Location
- COE (Central Office Equipment) on the Switch
- Splitter
- ICDF (Interconnection Distribution Frame)

USWEST

INFORMATION TECHNOLOGIES

Process / Data Needs

Name of Process	What It Does	What Information It Uses
Order Processing		
Customer Request	DLEC's method of requesting service	Local Service Order (LSR), End User (EU) form, Loop Service form (e.g., End-user Location TN, NC/NCI codes, CFA of DSLAM)
Service Order	Processes request in U S WEST legacy systems	USOCS and FIDS related to Shared Line order
Provisioning		
Assignment	Assigns loop from End User prem. to CFA, Splitter, and COE.	End User Address, COE, CFA, and splitter location. Must use existing cable and pair.
Dispatch	Notifies technician of inside or outside plant work	CLLI, Cable & Pair, COE, CFA and other information
Repair		
Repair Call Handling	Processes repair calls	Repair ticket
Dispatch	Notifies technician of repair work in the field	Repair ticket
Billing		
Turn up change	Bills DLEC for initial dispatch and cross connection	USOC
Recurring Billing	Bills DLEC for recurring line sharing fees	USOC and State Summary bill CSR
Repair Charges	Bills DLEC for repair call charges	T&C USOCs

USWEST

INFORMATION TECHNOLOGIES

Line Sharing Impact Assessment

Owner/ Functional area	Application Name	Application Description	Description of New Development and Enhancements
Ordering			
USW	IMA	Provides pre-order/order capabilities to the co-provider.	Need a mechanism to identify shared line order.
USW	ICADS	Translates LSR data into Service Order format based on applicable business rules.	Need business rules added to process shared line orders.
USW	Fetch-n-Stuff and Data Arbiter	Query legacy systems for data needed in the pre-order/order stages of IMA.	Enhancement to perform shared line facility availability queries.
USW	SOPAD, SOLAR, RSOLAR	Manages all service orders for each US WEST region. The Service Order Processor maintains a status of a service order from initiation to completion.	Enhancements to accept shared line orders and manage the service order flow.
Telecordia	SOAC	Service Order Analysis and Control. SOAC is the hub of the service order provisioning systems flow and provides service order routing to the SOA/LSMS, inventory, activation, and billing systems.	Enhancements to accept shared line orders and manage the service order flow.

USWEST

INFORMATION TECHNOLOGIES

Line Sharing Impact Assessment - continued

Owner/ Functional area	Application Name	Application Description	Description of New Development and Enhancements
Provisioning			
Telecordia	Telecordia Systems License Fees LFACS (All regions)	Loop Facility Assignment and Control. Provides cable pair information for local loops to SOAC. It does a lookup for addresses, terminals, and services and sends the information to SOAC.	Enhancements to allow for designated assignment locations (constrained loop assignment) and to reuse in place voice facilities.
Telecordia	SWITCH (All Regions)	The SWITCH system takes the telephone number information from CNUM, cable pair information from LFACS and guides the information to the correct network location.	Enhancements to assign to voice/data splitter, switch COE, and data CFA while reusing existing voice facilities.
Telecordia	WFA/C (All Regions)	Work and Force Administration/Control. Mechanizes the administration of the installation and maintenance of designed and non-designed circuits. Directs the flow of work items to WFA/DI and WFA/DO	Table Work for proper dispatch and workflow.
Telecordia	WFA/DI (All Regions)	Work and Force Administration/Dispatch In. Automates the work assignments of technicians in the centers. Assists in pricing, loading, and tracking work requests.	Table work for proper dispatch.

USWEST

INFORMATION TECHNOLOGIES

Line Sharing Impact Assessment - continued

Owner/ Functional area	Application Name	Application Description	Description of New Development and Enhancements
Provisioning			
Telecordia	WFA/DO (All Regions)	Work and Force Administration/Dispatch Out. Automates the support of the dispatch function for outside plant installation, maintenance, and routine work. It provides screening, pricing, mapping, routing, scheduling, and loading functions within a dispatch.	Table work for proper dispatch.
Telecordia	ALOC/CNUM (All Regions)	Access Location System/Customer Number Administration System. Mated pair of systems which provide customer address information and telephone number administration.	No Changes Anticipated.
Lucent	FAS	Field Access System. Used by technicians to dispatch and close jobs in WFA/DO.	Must support shared line dispatch and record appropriate time and cost.
USW	FAST	Field Access Screening Tool. FAST is a voice response system used by the LNO and construction technicians to access facilities information.	Must support shared line dispatch and record appropriate time and cost.
USW	Facility Check, Network Information Applet	This is a group of applications that supports spare facilities for additional lines and services.	Enhancements to perform line sharing loop qualifications.

USWEST

INFORMATION TECHNOLOGIES

Line Sharing Impact Assessment - continued

Owner/ Functional area	Application Name	Application Description	Description of New Development and Enhancements
Provisioning			
USW	APRIL	Receives and views all Service Orders for special service activation. These services include, but are not limited to SS7, POTS, ISDN, and AIN services.	APRIL reviewed every service order sent through the systems. While shared line orders will not be activated by APRIL, the SO must still be handled without errors.
USW	Repair Group Voice Response Unit	Call handling system that routes incoming calls to the appropriate group	Must be able to route to appropriate technicians dependent on the repair process needed.
Repair			
Lucent	Loop Management Operations System (LMOS)	Initiates, tracks and analyzes customer trouble reports on POTS subscribers.	Must store shared line circuit line records for repair processes. Must handle 2 records for a single facility.
Loop Expert Tech	Predictor	Identifies cable pair information associated with each directory number and provides verification of central office based features associated with a directory number.	Changes are not expected for shared line but must still be able to set features on the switch access portion of the loop.
Lucent	MLT	Mechanized Loop Test. Tests and analyzes the condition of customer loops. Provides test results that assist in decisions regarding trouble flow.	Changes are not expected for shared line but must still be able to test on the switch access portion of the loop.
USW	Repair Group Voice Response Unit	Call handling system that routes incoming calls to the appropriate group	Enhancements to handle shared line repair calls.

USWEST

INFORMATION TECHNOLOGIES

Line Sharing Impact Assessment - continued

Owner/ Functional area	Application Name	Application Description	Description of New Development and Enhancements
Billing			
USW	CRIS (all regions)	Customer Record Information System. System that bills for local service telephone products.	Enhancements to bill the Co-Provider for shared line charges.
USW	IABS	Integrated Access Billing Services. System that bills access charges to inter-exchange carriers.	No Changes Anticipated.

USWEST

INFORMATION TECHNOLOGIES

General Assumptions

- A shared line will have a TN (telephone number) for the POTS line and a Circuit ID for the data line.
- Automated testing by ILEC is only available on lines terminating at the switch.
- The DLEC will be given CFA (Connecting Facility Arrangement) information on a Co-Location APOT form.
- The DLEC will provide CFA information on the order for a shared line.
- OBF standards will be developed and adhered to for Line Sharing request.
- U S WEST will inventory and assign all segments of the shared line up to the CFA, including cross connections between the MDF, ICDF, and POTS Office Equipment.
- Initial solutions will target the scenario where U S WEST is providing the POTS service (< 4000 kHz) on a shared line and a DLEC is providing the data services (> 4000 kHz).
- POTS could be provided by an ILEC and the Data service by the CLEC or vice-versa.
- Other scenarios, like 1 CLEC and 1 DLEC sharing a line, or a DLEC in the outside plant would be addressed after the initial solution is in place and understood.

USWEST

INFORMATION TECHNOLOGIES

Risks

- Outages may occur if cut-overs are not coordinated between ILECs and DLECs
- Repair processes will be difficult to define and manage
- This document is not a line sharing solution -- only an initial investigation

USWEST

INFORMATION TECHNOLOGIES

Estimated Cost

	Low	High
Order	$700,000.00	$1,200,000.00
Provisioning	$2,640,000.00	$4,100,000.00
Repair	$80,000.00	$100,000.00
Billing	$80,000.00	$100,000.00
TOTAL	$3,500,000.00	$5,500,000.00

Timeline for deployment of these anticipated systems changes to support Line Sharing is unavailable. Many of these systems are owned and licensed by 3rd-party vendors and modifications have not been negotiated for this functionality.

There were several issues raised in the ex partes that were filed with the Commission. The issues and U S WEST's corresponding reponses are laid out below.

ISSUE: In its August 27, 1999 ex parte, Covad suggested using DAML technology and processes to address the Line Sharing OSS issues.

RESPONSE: DAML – Digital Additional Main Line is configured in a very different manner than what is necessary for Line Sharing and does not provide a model for Line Sharing in a RADSL or ADSL environment. The equipment that gets assigned for DAML is different than the type of equipment that is assigned for DSL. The assignment systems would still need to be changed. We currently cannot use DAML technology to assign a digital loop. DAML is completely voice, creating two voice channels on one loop. It is provisioned and inventoried through the normal POTS flow, whereas DSL is provisioned and inventoried through the designed loop flow.

In addition, DAML is not unbundled, nor is there any need to re-wire the loop or split the signal that is carried over that loop. It is all sent from the switch to the MDF to the F1 (main distribution) and F2. There is also no loop qualification process for DAML (because it is only a voice service, there is no need). There are different distance restrictions for DAML than for DSL and finally, the voice split must be for the same customer and must be on the same bill.

Dr. Dennis J. Austin, commissioned by the DLEC Coalition, prepared a statement that was provided to the Commission on September 30, 1999. That document raised a number of issues to which U S WEST would like to respond.

Response to Dr. Austin's Summary of Findings which is documented on page 7, and entitled Table-1.

ISSUE	U S WEST RESPONSE
Issue 1 – Develop a manual process, utilizing non-standard codes that will have to be changed once standards have been developed, and use paper requests and manual faxes to request service.	This manual processing will completely preclude any flow-through opportunities for these requests. Flow-through for unbundled loops (without manual intervention) is being implemented / deployed within the next month.

Issue 2 – Train employees on the assignment and inventory processes for Line Sharing.	This is not merely a matter of training employees. The systems must also generate new pieces of data (additional points of termination) as well as store that additional data for use in repair and subsequent provisioning activities.
Issue 3 – The address is the same; therefore the customer and service provider can be tracked and cross-referenced. .	It is not the address to the end-user customer that is the issue. Additional points of termination such as, the DLEC splitter, and the interconnection distribution frame must now be assigned and inventoried. These points of termination do not exist today in correlation with an ILEC-provided voice feed.
Issue 4 – Proposals for issues 1 – 3 should resolve the inability to notify both the DLEC and the end-user customer when there are problems on the loop.	Proposals 1 – 3 will not remedy the issues, therefore this issue is still unresolved.
Issue 6 – ILEC OSS have the ability to resolve duplicate trouble tickets and correlate duplicate trouble tickets.	Trouble tickets for the same loop may not be able to identified as duplicates. The POTS (voice) portion of the loop would be identified by a telephone number, whereas the the unbundled loop (data) portion of the loop is identified by a circuit-ID. Mechanized sytems duplicate checking would not be able to identify the duplication.
Issue 8 – Cross-reference end-user customer and DLEC for billing.	No need to cross-reference in billing, cross-referencing is necessary in assignments, inventory, and provisioning systems

ISSUE: Page 13 – Dr. Austin asserts that the functionality provided by the changes needed to implement U S WEST's ADSL service, to meet our obligations under §251 and §271 of the Telecommunications Act, provide much of the functionality needed to support Line Sharing.

RESPONSE: Some of the functionality needed to support Line Sharing is currently available with some modifications, however other portions of the functionality needed has not been developed or deployed at U S WEST.

- U S WEST has developed the capability for the transmission and receipt of the local service requests (LSRs). Modifications are needed to pass the required data needed.
- U S WEST has developed the capability to produce a retail end-user customer bill and a wholesale DLEC bill. Modifications are needed to identify and bill for the specific Line Sharing product.
- U S WEST has not developed the capability to perform assignment, inventory, and provisioning of the additional points of termination.

Technical Trial for Line Sharing

- Federal level technical testing on line sharing is needed.
- This testing needs to cover the areas missing in the Minnesota PUC ordered 45 day technical test of line sharing.
- The Federal level technical testing should allow for the appropriate time to test thoroughly to ensure network reliability.

Technical Trial for Line Sharing

Why the Minnesota PUC ordered the technical trial:

- Concerns for the impact to basic voice service on the PSTN with the introduction into the network of new equipment.
- Concerns for the impact to other fuctions (such as vertical features) from the use of external splitters.

Technical Trial for Line Sharing

What the Minnesota Technical Trial is:

- A lab trial of: CLEC ADSL equipment on U S WEST's voice line, and external splitters for network compatibility.
- A field technical test in a live environment with "friendlies" of the same configurations tested in the lab.

Technical Trial for Line Sharing

Constraints of the Minnesota testing:

- It is ADSL only.
- It does not test different types of xDSL in the same binder group, or multiple customers served by multiple CLECs and the RBOC in the same binder group.
- It does not incorporate the guarded/legacy systems (T1/HDSL) in the testing.
- It needs to test impacts to voice service with G.lite with various xDSL.
- The impacts to life line and 911 need to be tested.
- It does not test what happens in the binder group with non-ADSL versions of DSL when the provider pushes the reach out further in the loop.

Technical Trial for Line Sharing

Benefits of a Federal level technical test in addition to the Minnesota test:

- Identification of industry issues to be worked
- An understanding of power and reach limits and the interference impacts from extended reach
- concrete tests on loop qualification, real data beyond mathematical models
- an understanding of binder group management basic requirements
- an understanding of the requirements for splitter standard parameters
- overall network reliability impacts, which can then be addressed in the appropriate standards forums

Analysis of Market Dynamics

1. **DLECs currently have the ability to offer circuit switched voice and digital data in the same manner as ILECs offer DSL service.**

2. **DLECs will switch to IP telephony when quality equals circuit switched voice services.**

   - **Expected to happen in 9 to 18 months**

3. **DLECs will provide voice using IP by simply interconnecting with the ILEC.**

4. **DLECs do not want to invest in circuit switches during this interim period.**

5. **Line Sharing gives DLECs the following advantages:**

   - **Eliminates disadvantage suffered by refusal to deploy a more robust product line.**
   - **Put investment risk on ILECs for a product with a short life span.**
   - **Regulators might force ILECs to inflate their prices for data retail services.**
   - **DLECs will eventually avoid this added charge by introducing their own data/IP telephony product.**

Compromise on Line Sharing

1. DLEC buys unbundled loop.
2. DLEC resells basic exchange service at retail less the price of the loop provided it pays a minimum of $5.
3. DLEC owns customer for both voice and data at a small incremental cost.
4. DLEC splits voice and data at their DSLAM.
5. U S WEST manages voice.
6. Advantages:
   - Bridges the gap from now until IP telephony becomes commercially viable.
   - Providers will be offering complete sets of products and services to end users.
     - Mirrors what will occur in the marketplace when IP telephony becomes available.

Line Sharing
U S WEST Ex Parte
Legal Issues Presentation
October 7, 1999

- The ability of COVAD to provide data service without providing voice service is not a proper consideration under Section 251(d)(2) of the Act. Does not meet the "necessary" or "impair" tests.
- Line sharing creates a powerful disincentive to develop and/or utilize new loop technologies.
- Line sharing works only with RADSL or ADSL technologies.
- Totally digital technologies would require a resale mode. As U S WEST points out in its comments in this docket, this would not be line sharing, and would not be lawful for the Commission to order it even if line sharing could be ordered.
- Thus, permitting a CLEC using RADSL technology to purchase a portion of loop in order to avoid providing voice service, while requiring users of other technologies to pay for the entire loop (which is necessary because they use the entire loop) would constitute a governmental incentive for CLECs to rely on RADSL and ADSL technologies.
- Without such governmental technological intervention, loop technology is moving towards totally digital solutions.
- This scenario would be vastly aggravated should the FCC try to implement a "discount only" version of line sharing, such as COVAD seems to advocate
- Line sharing rewards CLECs for abandoning universal service.
- This problem too would be dramatically aggravated if the FCC adopted a "discount only" version of line sharing.
- Government-mandated line sharing could expose the federal treasury to liability.
- Line sharing mandated by the FCC constitutes a physical taking of ILEC property.
- See Gulf Power decisions, which holds that right-of-way sharing mandated by the Act constitutes a physical taking.
- Of course, the requirement to provide unbundled loops also constitute a physical taking.
- ILECs entitled to full value of taken property as just compensation.
- Failure to provide for such just compensation results in a legal liability of the United States to pay the valance to the ILEC.
- Congress contemplated such liability when it allowed FCC to seize loops and other network elements for benefit of competitors.
- Caution should be exercised before this power is expanded, because an ILEC would be entitled to the full value of what was taken.

This amount is far above what COVAD has proposed, and, indeed, is far above any cost allocation structure which the Commission might establish in other contexts.