Standard 3. Specification for Ancillary Services

PCIA Personal Communications Industry Association

Membership Services Department
500 Montgomery Street
Suite 700
Alexandria, Virginia 22314-1561
Phone: (703) 739-0300
FAX: (703) 836-1608
WEB: http://www.pcia.com

Standard 3

CALEA Specification for Ancillary Services

Version 1.0

PCIA Technical Committee

CALEA Subcommittee

19 February, 1999

Chairs:

CALEA Subcommittee:	David I. Odom, DOdom@conxus.com (CONXUS Communications, Inc.)
Regulatory Working Group:	David I. Odom, DOdom@conxus.com (CONXUS Communications, Inc.)
Technical Working Group:	Joe Mullin, JMullin@archcomm.com (Arch Communications Group, Inc.)

Authors:

Rob Lockhart, rob.lockhart@mot.com (Motorola, Inc.)
Ron Mercer, ron@email.rtswireless.com (Real Time Strategies Inc.)

Contributors:

Tony Phipps, tphipps@vancouver.glenayre.com (Glenayre Technologies Inc.)
Greg Wells, Gwells@atlanta.glenayre.com (Glenayre Technologies Inc.)
Steven Day, day@metrocall.com (Metrocall, Inc.)
Barry Kanne, barry@tga.com (TGA Technologies, Inc.)
Mark Witsaman, mwitsaman@mobilecomm.com (MobileMedia Communications Inc.)
Stephen Oshinsky, soshinsky@atc.skytel.com (SkyTel Communications, Inc.)
Mike Sheffield, msheffield@atc.skytel.com (SkyTel Communications, Inc.)
Richard Dietz, FRD006@email.mot.com (Motorola, Inc.)
Steven Petit, CSP005@email.mot.com (Motorola, Inc.)
Vick Cox, vcox@pagemart.com (PageMart Wireless, Inc.)
John Davis, jdavis@pagemart.com (PageMart Wireless, Inc.)
Chris Ward, cward@corp2.pagemart.com (PageMart Wireless, Inc.)
Keith Kornfeld, keith@rtswireless.com (Real Time Strategies Inc.)
Ralph Tomeoni, ralph@teknow.com (TekNow, Inc.)
Rob Hoggarth, hoggartr@pcia.com (PCIA)
Eddie Gleason, gleasone@pcia.com (PCIA)
Donald Vasek, vasekd@pcia.com (PCIA)

Editor:

Rob Lockhart, rob.lockhart@mot.com (Motorola, Inc.)

Document Status:

1.0 First publication (990219)

Trademarks, Registered Trademarks, and Service Marks:

PCIA and the PCIA logo are trademarks (™), registered trademarks (®), and service marks (SM) of the Personal Communications Industry Association. All third party brands, names, trademarks (™), registered trademarks (®), and service marks (SM) are the property of their respective owners.

Copyright:

© Copyright 1999 Personal Communications Industry Association. All Rights Reserved.

Foreword

In this document, the Personal Communications Industry Association (PCIA) Technical Committee defines the specifications for interface compatibility requirements between paging or wireless packet data service providers (PSPs) and law enforcement agencies (LEAs) for Ancillary Services.

Ancillary Services include caller/subscriber bridging, outdial, and one-number services.

The Communications Assistance for Law Enforcement Act (CALEA)[1] was enacted on October 25, 1994. CALEA requires telecommunications carriers to ensure that their equipment, facilities, or services have the capability to:

(1) "expeditiously ... isolate and enable the government to intercept all communications in the carrier's control to or from the equipment facilities or services of a subscribe[r], concurrently with the communications' transmission, or at any later time acceptable to the government;"

(2) "expeditiously ... isolate and enable the government to access reasonably available call identifying information about the origin and destination of communications;"

(3) "make intercepted communications and call identifying information available to government in a format available to the carrier so they may be transmitted over lines or facilities leased or procured by law enforcement to a location away from the carrier's premises;" and

(4) "meet these requirements with a minimum of interference with the subscriber's services and in such a way that protects the privacy of communications and call identifying information that are not targeted buy [sic] electronic surveillance orders, and that maintains the confidentiality of the government's wiretaps."[2]

Under CALEA, industry associations and standards-setting bodies are authorized to adopt standards for satisfying these assistance capability requirements. Telecommunications carriers, manufacturers, and/or support service providers that comply with these standards have "safe harbor" and are deemed in compliance with CALEA's capability requirements:

> "a telecommunications carrier shall be found to be in compliance with the assistance capability requirements under section 103, and a manufacturer of telecommunications transmission or switching equipment or a provider of telecommunications support services shall be found in compliance with section 106, if the carrier, manufacturer, or support service provider is in compliance with publicly available technical requirements or standards adopted by an industry association or standard-setting organization. ..."[3]

---

1 Communications Assistance for Law Enforcement Act, Pub. L. No 103-414 (CALEA).

2 Telecommunications Carrier Assistance to the Government, H. Rep. No. 103-827, at 22 (October 4, 1994).

3 CALEA, § 107.

In November 1997, an Interim Standard (J-STD-025) for wireline and wireless telephony was adopted by the Telecommunications Industry Association Subcommittee TR45.2 and Committee T1 of the Alliance for Telecommunications Industry Solutions.[4] Shortly thereafter, in December 1997, a working group was established under the auspices of PCIA to determine whether J-STD-025 was readily applicable to paging or wireless packet data technology and, if not, to develop a separate standard for the paging and wireless packet data industry. After carefully reviewing J-STD-025, the working group determined that J-STD-025's telephony specifications were predicated on a telephony switch of much greater complexity and capability than the limited telephony switches available to PSPs and, as such, was not readily applicable to paging or wireless packet data technology and that a separate standard was necessary.

In order to expedite the standards-setting process, the Paging Technical Committee decided to develop a Suite of Standards and release this Suite of Standards in three parts. This Standard deals with Ancillary Services. Any PSP, manufacturer, or service provider that complies with this Standard will have "safe harbor" for Ancillary Services under section 107 of CALEA and will be found in compliance with CALEA's assistance capability requirements.

The following Standard for ancillary services supplements, and may be used by the PSP and PSP Infrastructure manufacturer in lieu of, the standards previously adopted for traditional paging[5] and advanced messaging services.[6]

Two annexes are attached to this standard. These annexes are informative only and are not a part of this standard.

---

[4] Lawfully Authorized Electronic Surveillance, TIA/ATIS, Interim/Trial Use Standard (J-STD-025).

[5] Standard 1, CALEA Specification for Traditional Paging, v1.0

[6] Standard 2, CALEA Specification for Advanced Messaging, v1.0

Document Change Record

v1.0	19 February, 1999	First release of document.

Table of Contents

Foreword v

Document Change Record vii

Table of Contents ix

Table of Figures xi

1. Introduction 1

1.1 Purpose 1

1.2 Scope 1

1.3 How This Document is Organized 1

2. Features and Services Overview 3

2.1 Ancillary Services 3

2.1.1 Caller/Subscriber Bridging Services 3

2.1.2 Outdial Services 3

2.1.3 One-Number Services 3

2.2 Ancillary Services Interface Advantages 4

3. Assumptions 5

3.1 General 5

3.2 Call Content 5

3.2.1 Encryption 5

3.2.2 Encoding 6

3.2.3 Compression 6

3.3 Call Identifying Information 6

3.3.1 Caller/Subscriber Bridging Services 6

3.3.2 Outdial Services 7

3.3.3 One-Number Services 7

3.4 Call Completion 7

3.5 PSP Infrastructure Architectural Model 8

4. Network Reference Model 11

4.1 Lawful Authorization Action 11

4.2 PSP Administration Function 12

4.3 Provision Action 12

4.4 Law Enforcement Administrative Function 12

4.5 External Messaging Function 12

4.6 PSP Infrastructure Function 12

4.7 Delivery Action 13

4.8 Subject Radio Device Function 14

4.9 LEA-Provided CALEA Interface Function 14

5. Call Content and Reasonably Available Call-Identifying Information Delivery 15

5.1 Caller/Subscriber Bridging Services 15

5.2 Outdial Services 17

5.3 One-Number Services 18

6. Call Content and Reasonably Available Call-Identifying Information Surveillance Service Description 19

7. Advanced Messaging Interface (AMI) Protocol Extensions **21**
7.1 HTTP v1.1 POST Content Extensions 21
7.2 Origin vCard Extensions 21
7.3 Destination vCard Extensions 22
7.4 Termination vCard Extensions 23
7.5 Call Content 23
7.6 New vCard Protocol Properties 23
7.6.1 Audio Path Identification 24
7.6.2 Audio Activity Status 24
7.6.3 Examples 24
References **25**
Glossary **27**

Annex 1 Examples **A1 1**
A1 1. Caller/Subscriber Bridging Services Examples With Notification Pages Sent To Radio Devices **A1 1**
A1 1.1 Intercept Subject using Traditional Paging's Predefined Geographical Coverage A1 1
A1 1.1.1 Transaction Flow: A1 1
A1 1.1.2 AMI-Delivered Information A1 2
A1 1.2 Intercept Subject Using Advanced Messaging's Subscriber Defined On-Demand Roaming A1 4
A1 1.2.1 Transaction Flow: A1 4
A1 1.2.2 AMI-Delivered Information A1 4
A1 1.3 Intercept Subject Forwards to Alternate Radio Receiving Device A1 7
A1 1.3.1 Transaction Flow: A1 7
A1 1.3.2 AMI-Delivered Information A1 7
A1 1.4 Intercept Subject Using Advanced Messaging's Radio Transceiving Device A1 11
A1 1.4.1 Transaction Flow: A1 11
A1 1.4.2 AMI-Delivered Information A1 11
A1 2. Outdial Services Example **A1 15**
A1 2.1 Transaction Flow: A1 15
A1 2.2 AMI-Delivered Information A1 15
A1 3. One-Number Services Example **A1 19**

Annex 2 LEA-Provided CALEA Interface Examples **A2 1**
A2 1. Advanced Messaging - Single PC with Dedicated Link **A2 1**
A2 2. Advanced Messaging - Single PC with Long Distance ISP Links **A2 2**
A2 3. Ancillary Services - Single PC with Dedicated Links **A2 3**
A2 4. Ancillary Services - Dual PCs with Dedicated Links **A2 4**

Table of Figures

Figure 1: Single System PSP Infrastructure Model....8
Figure 2: Multi-System PSP Infrastructure Model....9
Figure 3: Ancillary Services Intercept Model....11
Figure 4: Data Delivery Point for LEA(s) and Audio Delivery Point for LEA(s)....21

Figure A2 1: Advanced Messaging - Single PC with Dedicated Link....A2 1
Figure A2 2: Advanced Messaging - Single PC with Long Distance ISP Links....A2 2
Figure A2 3: Ancillary Services - Single PC with Dedicated Links....A2 3
Figure A2 4: Ancillary Services - Dual PCs with Dedicated Links....A2 5

1. Introduction

In this document, the PCIA Technical Committee defines the specifications for interface compatibility requirements between PSPs and LEAs for Ancillary Services.

Ancillary services include caller/subscriber bridging, outdial, and one-number services.

The following Standard for ancillary services supplements, and may be used by the PSP and PSP Infrastructure manufacturer in lieu of, the standards previously adopted for traditional services and advanced messaging services.

One annex is attached to this standard. This annex is informative only and is not a part of this standard.

1.1 Purpose

In this document, the PCIA Technical Committee defines the specifications for interface compatibility requirements between PSPs and LEAs for Ancillary Services.

Any PSP, manufacturer, or service provider that complies with this Standard will have "safe harbor" for Ancillary Services under section 107 of CALEA and will be found in compliance with CALEA's assistance capability requirements.

1.2 Scope

The scope of this Standard is to define the services to support LAES and the interface between a PSP and an LEA for Ancillary Services.

1.3 How This Document is Organized

This Standard is organized as follows:

Foreword provides an overview of this document.

Document Change Record provides revision control for this document.

Section 1	**Introduction** defines the purpose, scope, and organization of this document.
Section 2	**Features and Services Overview** describes the features and services which are included in this Ancillary Services specification..
Section 3	**Assumptions** identifies this Standard's assumptions related to call content and reasonably available call-identifying information.
Section 4	**Network Reference Model** identifies the set of functional entities and actions for the intercept process.
Section 5	**Call Content and Reasonably Available Call-Identifying Information Delivery** describes the information provided by the PSP Infrastructure Data Delivery Point for LEA(s) and Audio Delivery Point for LEA(s).

Section 6	**Call Content and Reasonably Available Call-Identifying Information Surveillance Service Description** describes the service provided by the PSP Infrastructure to deliver call content and reasonably available call-identifying information for a particular intercept subject.
Section 7	**Advanced Messaging Interface (AMI) Protocol Extensions** define the AMI protocol extensions used to deliver reasonably available call-identifying information from the PSP Infrastructure Data Delivery Point for LEA(s) for use by the LEA-Provided CALEA Interface.
References	**References** defines a list of the references used in the preparation of this Standard.
Glossary	**Glossary** defines the words, acronyms, and initialisms that are used in this Standard.
Annex 1	**Examples** gives a non-comprehensive list of illustrative uses of this Standard.
Annex 2	**LEA-Provided CALEA Interface Examples** gives a non-comprehensive list of potential illustrative LEA-Provided CALEA interfaces for use with this Standard.

2. Features and Services Overview

This Standard defines intercept of wireless communications for subjects equipped with "Ancillary Services". The following describes the operational features and capabilities of the services classified as "Ancillary Services".

2.1 Ancillary Services

Ancillary Services include:

2.1.1 Caller/Subscriber Bridging Services

Caller/Subscriber Bridging Services generate a real time audio connection between an initiating calling party and an identified PSP subscriber called party using the PSP infrastructure to connect the calling and called parties.

When the calling party initiates a call to the subscriber and elects to be connected to the subscriber by real time audio, the PSP infrastructure sends a notification page to the subscriber. Upon receipt of this notification page, the subscriber may elect to speak directly with the calling party by calling a pre-assigned PSP infrastructure access number from any convenient telephone or other voice telephony device and requesting access to the calling party. The PSP infrastructure then bridges the subscriber's access line to that of the calling party's allowing a conventional telephone conversation between the called and calling parties.

2.1.2 Outdial Services

Outdial Services provide a PSP subscriber with the ability to use the PSP infrastructure to originate telephone calls from within the PSP infrastructure to telephones or other telephony devices outside of the PSP infrastructure. Subscriber access to this ancillary service is through the use of pre-assigned PSP infrastructure access number(s).

2.1.3 One-Number Services

One-Number Services support the linking of a number of disparate communications methods in order to find and utilize the most effective communications method available to reach the intended subscriber. For example, a subscriber may have a work telephone, a home telephone, a cellular telephone, and a two-way pager. A typical call to the subscriber's one-number service would route the call first to the work telephone. Failure to connect to the work telephone would then automatically attempt to deliver the call to the home telephone. Failure to connect to the home telephone would then continue to automatically attempt to deliver the call to the next service in the list of services until the call is finally delivered to the subscriber or the process terminates unsuccessfully.

One-number services are applicable to this Standard when the call content is routed through the PSP Infrastructure. Interception of such calls follows the method used for the service via which it is delivered. For example, calls routed to an Advanced Messaging two-way pager would use the Advanced Messaging intercept method for two-way pagers. Similarly, calls routed to an outdial service terminating in a home telephone would use the Ancillary Services intercept method associated with outdial services.

2.2 Ancillary Services Interface Advantages

The Ancillary Services Interface techniques included in this Standard for ancillary services offer a number of advantages.

- **Inclusive** - The Standard addresses all currently perceived Ancillary Services,
- **Universal** - Can be implemented using industry-standard computer protocols and audio paths,
- **Uniform** - Builds upon the Standard for Advanced Messaging's AMI protocol so that a single interface standard may support both large and small LEAs,
- **Scaleable** - Cost-effective for small systems and LEAs and may be field-expanded as needs grow,
- **Discrete** - Invisible to both intercept subjects and callers and controlled visibility to PSP staff,
- **Connectivity** - Flexible data transmission protocol and audio paths deliver surveillance on caller/subscriber bridging, outdial, and one-number services over the most appropriate communications facilities.

3. Assumptions

This Standard for ancillary services is based upon the following assumptions.

3.1 General

Ancillary Services LAES capabilities allow a PSP to deliver the intercepted call content and reasonably available call-identifying information to an authorized LEA as defined in Section 4. Caller/subscriber bridging services require both a notification page or wireless packet data call in addition to supplying the associated real time bridged audio call content between the Intercept Subject and the calling party and the reasonably available call-identifying information. Outdial services require supplying the associated real time bridged audio call content between the Intercept Subject and the called party and the reasonably available call-identifying information.

The call content and reasonably available call-identifying information for the notification page in caller/subscriber bridging services is described in the applicable Traditional Paging or Advanced Messaging Standard and will not be described again in this Standard for ancillary services.

3.2 Call Content

Although not specifically defined in CALEA, "content" is defined in 18 USC 2510 (8) to be "when used with respect to any wire or electronic communications, includes any information concerning the substance, purport or meaning of that communication." As interpreted by this Standard for ancillary services, call content covers the notification tone-only, numeric, alphanumeric, binary data, or voice message page content and the bridged audio content. When used in caller/subscriber bridging and outdial services, the bridged audio content is common to both the calling party, in caller/subscriber bridging services, or called party, in outdial services, and the Intercept Subject.

Call content information supplied by the PSP to the LEA may be derived from various sources (e.g., email, multiple phone/pin numbers). The PSP will, under the terms of a Lawful Authorization, provide all reasonably available information to the LEA.[7] It shall remain the responsibility of the LEA to review and minimize any delivered information which falls outside the bounds of the Lawful Authorization.

3.2.1 Encryption

As interpreted by this Standard for ancillary services, encryption is defined as the process of changing the format of the information content of a message or message routing information such that external observers will not be able to interpret correctly the content or routing information.

APSP shall not be responsible for decrypting, or ensuring the government's ability to decrypt, any communication encrypted by a subscriber or customer, unless the encryption was provided by the PSP and the PSP possesses the information necessary to decrypt the communication.[8]

---

[7] 47 U.S.C. § 2518(4) does not mandate that a Lawful Authorization authorizing the interception of a subscriber's facilities identify those facilities in any specific manner (e.g., by the phone number associated with that facility as opposed to the capcode and frequency for the facility). Instead, it simply requires that the order specify "the nature and location of the communications facilities as to which, or the place where, authority to intercept is granted."

[8] CALEA, § 103(b)(3).

3.2.2 Encoding

As interpreted by this Standard for ancillary services, encoding is defined as the conversion of data or voice signals into a format suitable for transmission by the PSP infrastructure.

If the PSP Infrastructure encodes voice, then the encoding algorithm will be made available to the LEA, if appropriate. Licensing issues associated with such encoding formats are beyond the scope of this Standard and must be handled between the LEA and the licensor.

3.2.3 Compression

As interpreted by this Standard for ancillary services, compression is defined as the reduction in the number of bits required to exchange information between two or more parties.

If the PSP Infrastructure compresses voice, then the compression algorithm will be made available to the LEA, if appropriate. Licensing issues associated with such compression methods are beyond the scope of this Standard and must be handled between the LEA and the licensor.

Compression can take on multiple forms as illustrated by the following examples.

- **Codes** - where a code of 01 may represent a character string comprised of one or more words,
- **Compression of binary data** - where a lossless or lossy algorithm is used to reduce the redundant information content in a message.

If the PSP Infrastructure compresses a message using codes, then the PSP Infrastructure will decompress the message prior to sending it to the LEA.

If the PSP Infrastructure compresses a message using a lossless or lossy compression algorithm, then the compression algorithm will be made available to the LEA. If a lossy compression algorithm is used on the call content, no translations of content will be provided as part of the Delivery process to the LEA so as to protect the integrity of information content of the message. Licensing issues associated with such algorithms are beyond the scope of this Standard and must be handled between the LEA and the licensor.

3.3 Call Identifying Information

Call identifying information is defined in CALEA Section 102 (2) to be "dialing or signaling information that identifies the origin, direction, destination or termination of each communication generated or received by a subscriber by means of any equipment, facility or service of a [PSP]".

3.3.1 Caller/Subscriber Bridging Services

As interpreted by this Standard for ancillary services, caller/subscriber bridging services call-identifying information is defined as follows:

- **Destination** is the radio receiving or transceiving device address to which a call is being made and the number or address from which the bridged call is being returned (e.g., called party);
- **Direction** is the transmission path from the calling number or address to the called number or address;
- **Origin** is the number or address of the party initiating the call (e.g., calling party); and
- **Termination** is the alternate number or address to which a call is being routed, if applicable (e.g., forwarded party).

For these caller/subscriber bridging services, reasonably available call-identifying information is that information used in the Home Node for call processing and will be provided at both the beginning and end of the call. Reasonably available call-identifying information generally consists of the address of the subject's radio receiving or transceiving device(s) and, if appropriate, the address to which the message has been forwarded or redirected. The call origin and bridged call return are not reasonably available in most PSP installations but may be obtained through the originating service provider (e.g., EC, ISP).

3.3.2 Outdial Services

As interpreted by this Standard for ancillary services, outdial services call-identifying information is defined as follows:

- **Destination** is the number or address of the party receiving the call (i.e., called party);
- **Direction** is the transmission path from the intercept subject's calling number or address to the called number or address;
- **Origin** is the address of the intercept subject's radio transceiving device and the number or address from which the bridged call is being made (i.e., the calling party); and
- **Termination** is the same as *Destination.*

For these outdial services, reasonably available call-identifying information is that information used in the Home Node for call processing and will be provided at both the beginning and end of the call. Reasonably available call-identifying information generally consists of the address of the subject's radio receiving or transceiving device(s) and the destination number or address. The bridged call origin is not reasonably available in most PSP installations but may be obtained through the originating service provider (e.g., EC, ISP).

3.3.3 One-Number Services

While one-number services are addressed in this Standard for ancillary services, interception of such calls follows the method used for the rerouted service. For example, calls routed to an Advanced Messaging two-way pager would use the Advanced Messaging intercept method for two-way pagers. Similarly, calls routed to an outdial service terminating in a home telephone would use the Ancillary Services intercept method associated with outdial services.

3.4 Call Completion

As interpreted by this Standard for ancillary services, call completion is defined as the establishment of the bridge of the audio paths carrying the called and calling party audio within the PSP Infrastructure. If the audio paths are not bridged within the PSP Infrastructure, then the call is considered to be not completed and will not be reported.

3.5 PSP Infrastructure Architectural Model

As interpreted by this Standard for ancillary services, the PSP Infrastructure architecture is defined to include three distinct network nodes as shown in Figure 1. These nodes are defined as follows:

- **Input Node** encompasses those functions needed to deliver messages to and from wireline carrier sources (e.g., EC, ISP),
- **Home Node** encompasses subscriber database records and those functions needed to route messages between the appropriate Input Node(s) and the RF Network or other Input Node(s), and
- **RF Network** encompasses those functions needed to deliver messages to and from wireless carrier sources (e.g., radio transceiving devices). The RF Network includes RF transmitters and Output Node encoders and, in two-way advanced messaging systems, RF receivers.

These network nodes may be geographically distributed or concentrated and may exist as either individual physical or virtual entities or some combination thereof.

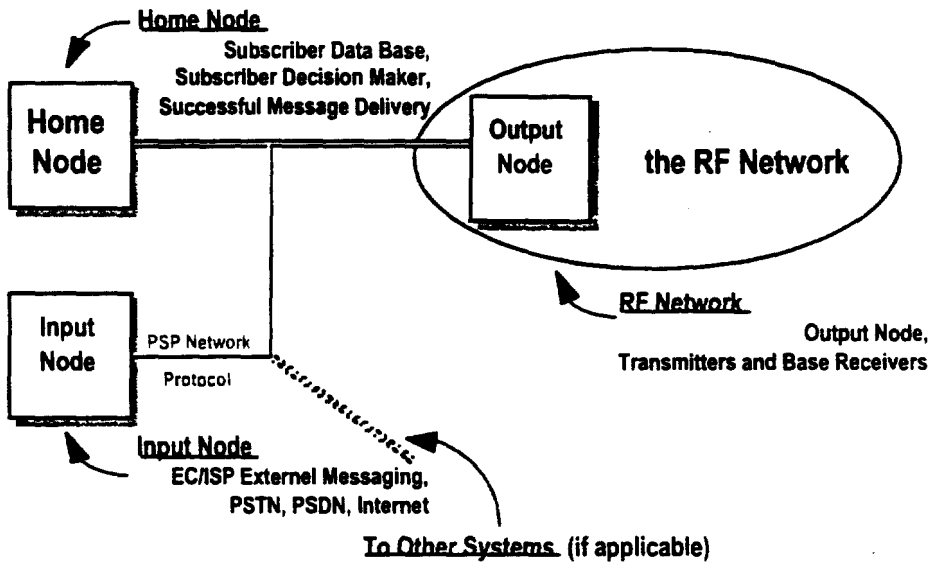

Figure 1: Single System PSP Infrastructure Model

These network nodes may also be grouped to form a PSP Infrastructure consisting of multiple system nodes. One such multiple system PSP Infrastructure is shown in Figure 2.

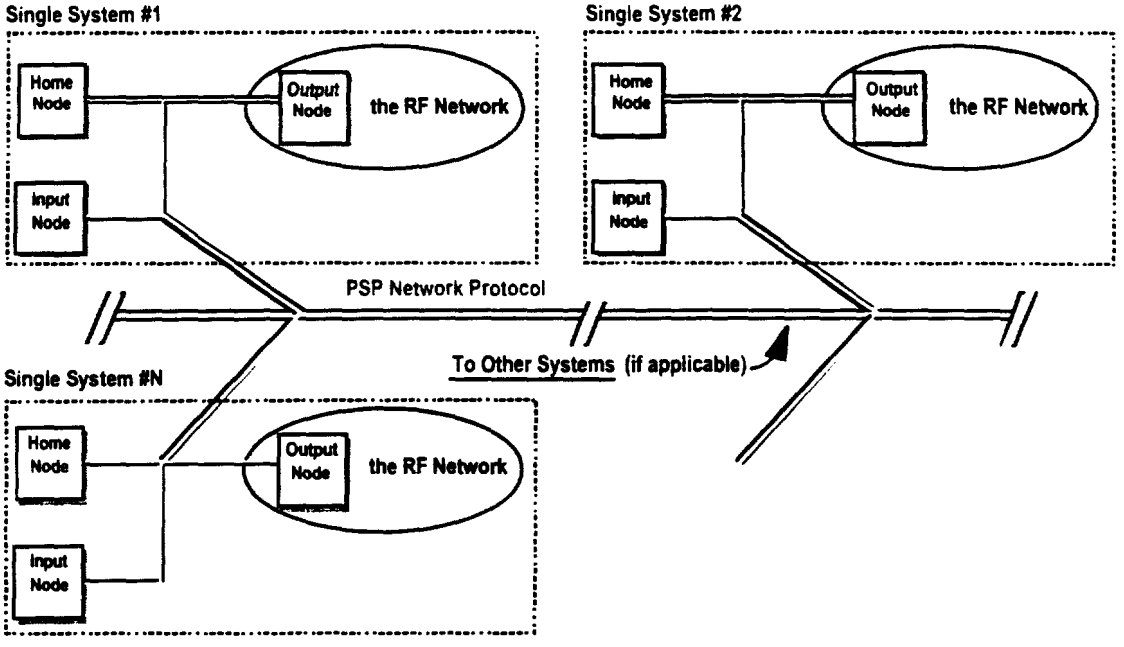

Figure 2: Multi-System PSP Infrastructure Model

The definition of the functions of these network nodes and any or all protocols used between these network nodes is beyond the scope of this Standard.

4. Network Reference Model

The intercept process consists of a set of functional entities and the actions between the functional entities. The functional entities (PSP Administration, LEA Administration, LEA-Provided CALEA Interface, PSP Infrastructure, and External Messaging) provide the functions of the system and actions (Authorization, Provision, and Delivery) provide the communication of information between the functional entities. These actions and functional entities are discussed without regard to their implementation. The relationships between these actions and functional entities are shown in Figure 3.

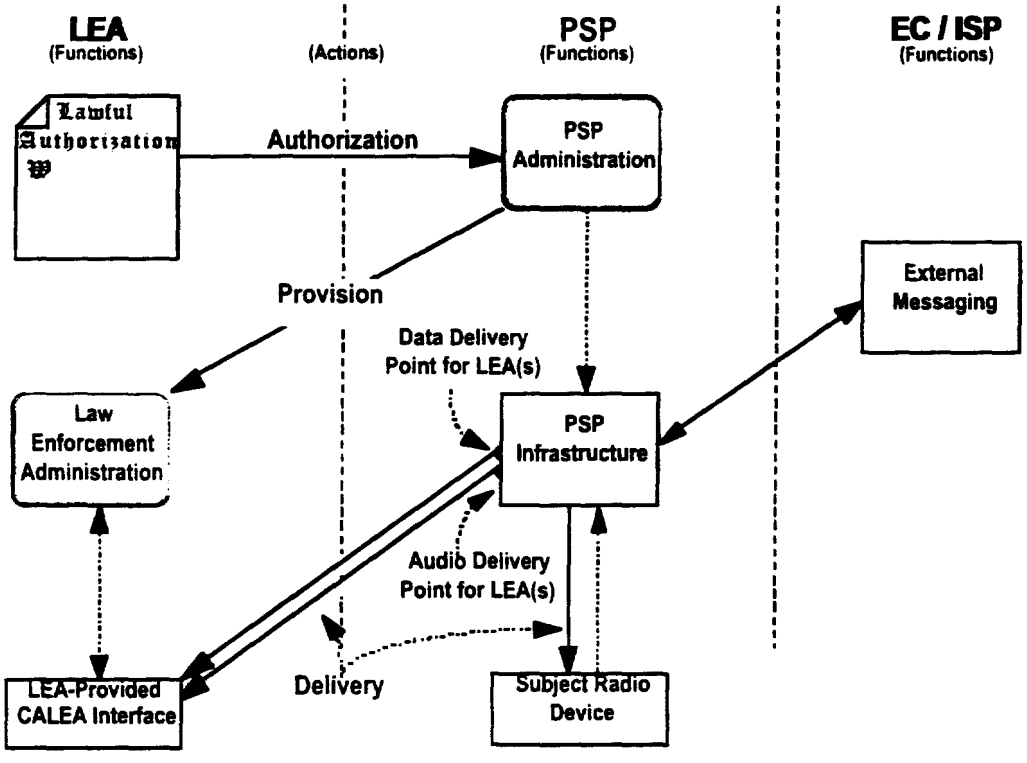

Figure 3: Ancillary Services Intercept Model

The **Lawful Authorization** is an important part of the LAES. No intercepts shall take place without specific lawful authorization. One Lawful Authorization may encompass multiple devices and/or multiple geographic locations.

4.1 Lawful Authorization Action

The Lawful Authorization Action is the serving of the Lawful Authorization to the PSP by the LEA.

4.2 PSP Administration Function

The PSP Administration Function is responsible for controlling the Provision, enabling the Delivery Actions, and maintaining the Data Delivery Point for LEA(s) and Audio Delivery Point for LEA(s).

Other functions of the PSP Administrative Function are beyond the scope of this standard.

4.3 Provision Action

The Provision Action is responsible for enabling and disabling activation of the Data Delivery Point for LEA(s) and Audio Delivery Point for LEA(s). The Provision Action includes the ability:

- to unobtrusively make the call content and reasonably available call-identifying information available to the delivery action and
- to protect (i.e., prevent unauthorized access, manipulation, and disclosure) intercept controls and intercepted call content and reasonably available call-identifying information consistent with PSP security policies and practices.

For ancillary services, the Provision Action establishes the interface and controls between the LEA and the PSP for the purpose of intercepting messaging traffic as specified by a Lawful Authorization.

4.4 Law Enforcement Administrative Function

The Law Enforcement Administrative Function is responsible for controlling LEA electronic surveillance functions.

The LEA is also responsible for providing the LEA-Provided CALEA Interface and the associated Delivery Function links to the PSP Infrastructure Data Delivery Point for LEA(s) and Audio Delivery Point for LEA(s) for receiving the messaging traffic of the subject of a lawful authorization and for transporting, capturing, and processing of the delivered call content and reasonably available call-identifying information.

The Law Enforcement Administrative Function is the responsibility of the LEA.

Other functions of the Law Enforcement Administrative Function are beyond the scope of this standard.

4.5 External Messaging Function

The External Messaging Function is the delivery of messages to and from wireline carrier sources (e.g., EC, ISP) to the PSP Infrastructure and is beyond the scope of this Standard.

4.6 PSP Infrastructure Function

The PSP Infrastructure Function is the switching and radio transmission network of the PSP. For this Standard, the PSP Infrastructure is responsible for the collection and delivery of call content and reasonably available call-identifying information of one or more lawfully authorized intercept subject(s). The PSP Infrastructure function includes the ability:

- to accept the call content and reasonably available call identifying information for each intercept subject for each completed call processed by the home node;
- to gather the information required for providing the call content and reasonably available call-identifying information consisting of the completed call origin (if reasonably available), completed call destination, completed call termination (if appropriate), and date and time of completed call delivery;
- to ensure the call content and reasonably available call-identifying information delivered from the Data Delivery Point for LEA(s) and Audio Delivery Point for LEA(s) is authorized for a particular LEA;
- to deliver the call content and reasonably available call-identifying information for each intercept subject from the Data Delivery Point for LEA(s) and Audio Delivery Point for LEA(s) for use by one or more LEA-Provided CALEA Interfaces (up to a total of five per intercept subject);
- to ensure delivery is only available from the Data Delivery Point for LEA(s) and Audio Delivery Point for LEA(s) for the time limit bounds set by the Lawful Authorization (which may be a manual or automatic process); and
- to protect (i.e., prevent unauthorized access, manipulation, and disclosure) intercept controls and intercepted call content and reasonably available call-identifying information consistent with PSP security policies and practices.

4.7 Delivery Action

The Delivery Action is responsible for delivering intercepted communications expeditiously from the PSP Infrastructure Data Delivery Point for LEA(s) and Audio Delivery Point for LEA(s) for use by one or more LEA-Provided CALEA Interfaces (up to a total of five per intercept subject). Transporting, capturing, correlating the data and audio paths, and processing of the delivered call content and reasonably available call-identifying information is the responsibility of the Law Enforcement Administrative Function.

The Delivery Action includes the ability:

- to deliver call content and reasonably available call-identifying information for each intercept subject from the PSP Infrastructure Data Delivery Point for LEA(s) and Audio Delivery Point for LEA(s); and
- to protect (i.e., prevent unauthorized access to, manipulation of, or disclosure of) intercept controls and intercepted call content and reasonably available call-identifying information consistent with PSP security policies and practices.

For Ancillary Services, the Delivery Action delivers reasonably available call-identifying information using the Advanced Messaging Interface (AMI) Protocol from the PSP Infrastructure Data Delivery Point for LEA(s) and delivers call content from the PSP Infrastructure Audio Delivery Point for LEA(s) for use by the LEA-Provided CALEA Interface.

Enabling and disabling the Delivery Function from the PSP Infrastructure Data Delivery Point for LEA(s) and Audio Delivery Point for LEA(s) as defined in the Lawful Authorization is the responsibility of the PSP.

The methods of delivery transport from the Data Delivery Point for LEA(s) (e.g., Ethernet, X.25, Dial-Up PPP, Frame Relay) and security measures (e.g., SSL, dedicated transmission paths) employed by the LEA are beyond the scope of this Standard.

The method of delivery transport from the Audio Delivery Point for LEA(s) must support at least one standard balanced 600 Ohm analog audio path or one DS0 on a T1 digital line. Expansions for additional capacity to more than one Audio Delivery Point for LEA(s) may take the form of additional balanced 600 Ohm analog audio paths or expanded T1 capacity. Call supervision is provided as part of the AMI transaction.

Choice and location of the type of Data Delivery Point for LEA(s) and Audio Delivery Point for LEA(s) interface and choice of the method of interconnect is left to the discretion of the PSP and the PSP Infrastructure manufacturer.

Transport security measures employed by the LEA are beyond the scope of this Standard.

4.8 Subject Radio Device Function

The Subject Radio Device Function is responsible for collecting and interpreting communications from and, where applicable, encoding and disbursing communications to the Home Node of the intercept subject.

The functions of the Subject Radio Device are beyond the scope of this Standard.

4.9 LEA-Provided CALEA Interface Function

The LEA-Provided CALEA Interface Function is responsible for collecting lawfully authorized intercepted communications (i.e., call content and reasonably available call-identifying information) for the LEA. The LEA-Provided CALEA Interface Function is the responsibility of the LEA.

The LEA-Provided CALEA Interface Function includes the ability to receive and process call content and reasonably available call-identifying information for each intercept subject.

Enabling and disabling of the activation of the LEA-Provided CALEA Interface is the responsibility of the LEA Administration Function and is beyond the scope of this Standard.

Procurement and monitoring of the LEA-Provided CALEA Interface is the responsibility of the LEA and is beyond the scope of this Standard.

5. Call Content and Reasonably Available Call-Identifying Information Delivery

This section describes the information provided by the PSP Infrastructure Data Delivery Point for LEA(s) and Audio Delivery Point for LEA(s) for use by the LEA-Provided CALEA Interface. The PSP is required to provide access to the call content and reasonably available call-identifying information for particular intercept subjects.

In cases where circumstances dictate that the call content and the reasonably available call-identifying information associated with a particular subject need to be delivered to more than one LEA simultaneously, as may occur when different LEAs are conducting independent investigations on the same subject, the delivered call content and reasonably available call-identifying information shall be made available to other LEAs as required (up to a total of five per intercept subject). In the event that the LEA is conducting investigations on more than one subject, the delivered call content and reasonably available call-identifying information may be combined within the connection to the LEA. In this case, the information is uniquely identified in such a manner that the LEA is able to determine the intercept subject.

A subject's reasonably available call-identifying information is transported to the LEA over a wireline connection via an HTTP shell with included MIME-encoded enclosures for vCard-identified reasonably available origin, destination, and, when applicable, termination information. A subject's call content is transported to the LEA over a separate wireline audio connection. The three types of events to be monitored within an Ancillary Services System for an intercept subject are caller/subscriber bridging services, outdial services, and one-number services. Call-identifying information is provided when reasonably available and is synchronized with the call content through the use of pointers within the HTTP POST operation.

5.1 Caller/Subscriber Bridging Services

A caller/subscriber bridging service event occurs when:

1. A notification page message is delivered to the PSP radio transmission network from the subscriber's Home Node;
2. An AMI protocol message associated with the notification page and containing information defined by the appropriate Traditional Paging or Advanced Messaging transaction is delivered to the Data Delivery Point for LEA(s).
3. On completion of the bridge of the audio paths carrying the called and calling party audio and activation of the appropriate Audio Delivery Point for LEA(s), a second AMI protocol message is delivered to the Data Delivery Point for LEA(s) identifying the following:
   - **Call-Identifying Message Number** is a PSP-generated message identification number that is provided to allow the LEA to coordinate related outbound and inbound or bridge completion and release messages when the latter is known to be a response to the former by the PSP;
   - **Origin** is the number or address of the party initiating the call (e.g., calling party), if reasonably available;
   - **Destination** is the radio receiving or transceiving device address to which a call is being made and the number or address from which the bridged call is being returned, if reasonably available (e.g., called party);
   - **Direction** is the transmission path from the calling number or address to the called number or address and is inferred from the inclusion of the intercept subject's address in *Destination*;

- **Termination** is the alternate number or address to which a call is being routed, if applicable (e.g., forwarded party);
- **Date and Time** is the date and time (to a resolution of +/- one second based on the internal clock of the device encompassing the Data Delivery Point) of the completion of the bridge of the audio paths carrying the called and calling party audio; and
- **Audio Path Identification** is the information needed for the LEA(s) to connect to the appropriate Audio Delivery Point for LEA(s) and is included in *Destination*.

Call Content is the actual content of the message supplied through the indicated Audio Delivery Point for LEA(s).

4. On release of the bridge of the audio paths carrying the called and calling party audio and deactivation of the appropriate Audio Delivery Point for LEA(s), a third AMI protocol message is delivered to the Data Delivery Point for LEA(s) identifying the following:
   - **Call-Identifying Message Number** is a PSP-generated message identification number that is provided to allow the LEA to coordinate related outbound and inbound or bridge completion and release messages when the latter is known to be a response to the former by the PSP;
   - **Origin** is the number or address of the party initiating the call (e.g., calling party), if reasonably available;
   - **Destination** is the radio receiving or transceiving device address to which a call is being made and the number or address from which the bridged call is being returned, if reasonably available (e.g., called party);
   - **Direction** is the transmission path from the calling number or address to the called number or address and is inferred from the inclusion of the intercept subject's address in *Destination*;
   - **Termination** is the alternate number or address to which a call is being routed, if applicable (e.g., forwarded party);
   - **Date and Time** is the date and time (to a resolution of +/- one second based on the internal clock of the device encompassing the Data Delivery Point) of the release of the bridge of the audio paths carrying the called and calling party audio; and
   - **Audio Path Identification** is the information needed for the LEA(s) to disconnect from the appropriate Audio Delivery Point for LEA(s) and is included in *Destination*.

   Call Content is no longer supplied through the indicated Audio Delivery Point for LEA(s).

5.2 Outdial Services

An outdial service event occurs

1. On completion of the bridge of the audio paths carrying the outdial service called and calling party audio and activation of the appropriate Audio Delivery Point for LEA(s), an AMI protocol message is delivered to the Data Delivery Point for LEA(s) identifying the following:
   - **Call-Identifying Message Number** is a PSP-generated message identification number that is provided to allow the LEA to coordinate related inbound and outbound or bridge completion and release messages when the latter is known to be a response to the former by the PSP;
   - **Origin** is the address of the intercept subject's radio transceiving device and the number or address from which the bridged call is being made, if reasonably available (i.e., the calling party);
   - **Destination** is the number or address of the party receiving the call (i.e., called party);
   - **Direction** is the transmission path from the intercept subject's calling number or address to the called number or address and is inferred from the inclusion of the intercept subject's address in *Origin*;
   - **Termination** is the same as *Destination* and, as such, is not supplied;
   - **Date and Time** is the date and time (to a resolution of +/- one second based on the internal clock of the device encompassing the Data Delivery Point) of the completion of the bridge of the audio paths carrying the called and calling party audio; and
   - **Audio Path Identification** is the information needed for the LEA(s) to connect to the appropriate Audio Delivery Point for LEA(s) and is included in *Destination*.

   Call Content is the actual content of the message supplied through the indicated Audio Delivery Point for LEA(s).

2. On release of the bridge of the audio paths carrying the outdial service called and calling party audio and deactivation of the appropriate Audio Delivery Point for LEA(s), a second AMI protocol message is delivered to the Data Delivery Point for LEA(s) identifying the following:
   - **Call-Identifying Message Number** is a PSP-generated message identification number that is provided to allow the LEA to coordinate related inbound and outbound or bridge completion and release messages when the latter is known to be a response to the former by the PSP;
   - **Origin** is the address of the intercept subject's radio transceiving device and the number or address from which the bridged call is being made, if reasonably available (i.e., the calling party);
   - **Destination** is the number or address of the party receiving the call (i.e., called party);
   - **Direction** is the transmission path from the intercept subject's calling number or address to the called number or address and is inferred from the inclusion of the intercept subject's address in *Origin*;
   - **Termination** is the same as *Destination* and, as such, is not supplied;
   - **Date and Time** is the date and time (to a resolution of +/- one second based on the internal clock of the device encompassing the Data Delivery Point) of the release of the bridge of the audio paths carrying the called and calling party audio; and
   - **Audio Path Identification** is the information needed for the LEA(s) to disconnect from the appropriate Audio Delivery Point for LEA(s) and is included in *Destination*.

   Call Content is no longer supplied through the indicated Audio Delivery Point for LEA(s).

5.3 One-Number Services

One-number services are applicable to this Standard when the call content is routed through the PSP Infrastructure. Interception of such calls follows the method used for the service via which it is delivered. For example, calls routed to an Advanced Messaging two-way pager would use the Advanced Messaging intercept method for two-way pagers. Similarly, calls routed to an outdial service terminating in a home telephone would use the Ancillary Services intercept method associated with outdial services.

6. Call Content and Reasonably Available Call-Identifying Information Surveillance Service Description

This section describes the service provided by the PSP Infrastructure to deliver call content and reasonably available call-identifying information for a particular intercept subject.

The delivery mechanism specifies that identified call content and reasonably available call-identifying information which shall be expeditiously provided to LEAs (up to a total of five LEAs per intercept subject) in a common format using readily available protocols, wireline transport links, and computing equipment. The description of specific implementations for the PSP Infrastructure Data Delivery Point for LEA(s) and Audio Delivery Point for LEA(s) is left flexible to handle a multitude of TCP/IP-supporting and scaleable analog and digital audio connectivity solutions. The transporting, capturing, and processing of the delivered call content and reasonably available call-identifying information is the responsibility of the Law Enforcement Administrative Function.

The communications and protocol between the PSP Infrastructure Data Delivery Point for LEA(s) and Audio Delivery Point for LEA(s) and the LEA-Provided CALEA Interface allow the LEA to receive call content and reasonably available call-identifying information in an expeditious manner, regardless of the location of the intercept subject.

The interface provides access to the messages and audio to and from the intercept subject unobtrusively and transparently. Access to reasonably available call-identifying information and call content does not deny the availability of ancillary services to either the intercept subject or the calling or called party.

APSP shall not be responsible for decrypting, or ensuring the government's ability to decrypt, any communication encrypted by a subscriber or customer, unless the encryption was provided by the PSP and the PSP possesses the information necessary to decrypt the communication.[9]

If the PSP Infrastructure encodes voice, then the encoding algorithm will be made available to the LEA, if appropriate. Licensing issues associated with such encoding formats are beyond the scope of this Standard and must be handled between the LEA and the licensor.

If the PSP Infrastructure compresses voice, then the compression algorithm will be made available to the LEA, if appropriate. Licensing issues associated with such compression methods are beyond the scope of this Standard and must be handled between the LEA and the licensor.

If the PSP Infrastructure compresses a message using codes, then the PSP Infrastructure will decompress the message prior to sending it to the LEA.

If the PSP Infrastructure compresses a message using a lossless or lossy compression algorithm, then the compression algorithm will be made available to the LEA. If a lossy compression algorithm is used on the call content, no translations of content will be provided as part of the Delivery process to the LEA so as to protect the integrity of information content of the message. Licensing issues associated with such algorithms are beyond the scope of this Standard and must be handled between the LEA and the licensor.

---

9 CALEA, § 103(b)(3).

7. Advanced Messaging Interface (AMI) Protocol Extensions

The Advanced Messaging Interface (AMI) protocol is defined in the PCIA CALEA Specification for Advanced Messaging[10] and deals with only the transfer of application layer information from the Data Delivery Point for LEA(s) as shown in Figure 4. Please refer to the referenced specification for details of the AMI protocol.

This section defines the extensions to the AMI protocol needed to specify the audio path identification information used to link specific bridged audio content, available through the Audio Delivery Point for LEA(s) as shown in Figure 4, to the call identifying information in the specifying AMI protocol message.

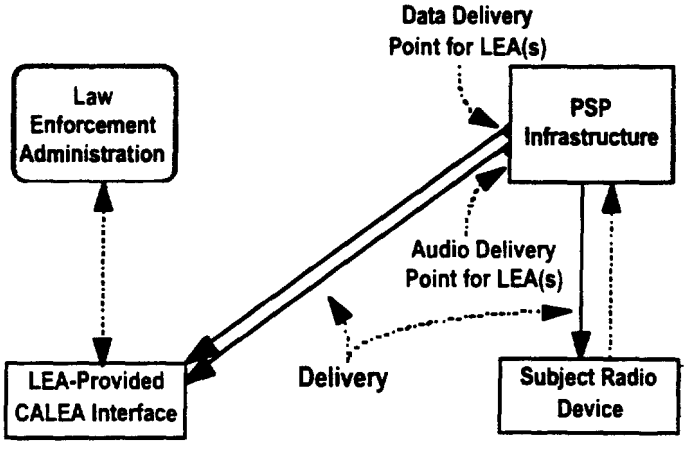

Figure 4: Data Delivery Point for LEA(s) and Audio Delivery Point for LEA(s)

The extensions include:

- An Audio Delivery Point for LEA(s) path and status identifier and
- A telephone number for the Intercept Subject, if reasonably available, identifying the number used to call the PSP infrastructure to set up the audio bridge.

7.1 HTTP v1.1 POST Content Extensions

The content of the POST operation in an Ancillary Services transaction is a single file consisting of MIME-encoded concatenated vCards only. Call Content is not applicable in this context since it is provided via the indicated Audio Delivery Point for LEA(s).

7.2 Origin vCard Extensions

The 'origin.vcf' vCard contains the relevant identification information for the origination of the message.

If the origination is the Intercept Subject, then this vCard is mandatory with format as follows:

BEGIN:VCARD
VERSION:2.1-IrDA
N:[Intercept Subject's Name]

[10] Standard 2, CALEA Specification for Advanced Messaging, v1.0

TEL;PAGER:[PIN]
X-PCIA-CAPCODE:[CapCode]
TEL:[Phone Number]
END:VCARD

where the [Intercept Subject's Name] is the Intercept Subject's name, if reasonably available, or simply the name 'intercept subject', if not reasonably available. Use of the TEL;PAGER or X-PCIA-CAPCODE properties will depend on the type of Lawful Authorization supplied. Additionally, use of the optional TEL:[Phone Number] property indicates the calling number or address of the Intercept Subject, if reasonably available.

If the origination is not the Intercept Subject, there are no extensions needed for these Ancillary Services. Please refer to the referenced specification for details of the AMI protocol.

7.3 Destination vCard Extensions

The 'destination.vcf' vCard contains the relevant identification information for the destination of the message.

If the destination is the Intercept Subject, then this vCard is mandatory with format as follows:

BEGIN:VCARD
VERSION:2.1-IrDA
N:[Intercept Subject's Name]
TEL;PAGER:[PIN]
X-PCIA-CAPCODE:[CapCode]
TEL:[Phone Number]
X-PCIA-AUDIO;AUDIOSTATUS=[audiostatusval]:[AudioPathIdentification]
UID:[Message Number]
END:VCARD

where the [Intercept Subject's Name] is the Intercept Subject's name, if reasonably available, or simply the name 'intercept subject', if not reasonably available. Use of the TEL;PAGER or X-PCIA-CAPCODE parameters will depend on the type of Lawful Authorization supplied. Additionally, use of the optional TEL:[Phone Number] property indicates the bridged return call number or address of the Intercept Subject, if reasonably available.

If the destination is not the Intercept Subject, then this vCard is mandatory with format as follows:

BEGIN:VCARD
VERSION:2.1-IrDA
N:not available
TEL:[Phone Number]
X-PCIA-AUDIO;AUDIOSTATUS=[audiostatusval]:[AudioPathIdentification]
UID:[Message Number]
END:VCARD

where the name is a choice of the names 'not available', if not reasonably available, 'PIN Name', or 'System' depending on the nature of the destination point and reasonably available destination information. Additionally, use of the TEL:[Phone Number] property indicates the called number or address of the destination.

Since the 'destination.vcf' vCard is always present, the audio path identification information for the applicable Audio Delivery Point for LEA(s) is carried in the Destination vCard as the X-PCIA-AUDIO parameter. Completion and release of the bridged audio available on the indicated Audio Delivery Point for LEA(s) is indicated by setting the AUDIOSTATUS parameter to [1] or [0], respectively, in successively transmitted AMI protocol messages. Use of the X-PCIA-AUDIO parameter is mandatory in Ancillary Services transactions to allow tying of bridged audio Call Content to the AMI protocol-provided, reasonably available Call Identifying Information. This parameter must be omitted in those instances where the Lawful Authorization does not specify collecting the Call Content.

Conference calls (e.g., one call to multiple destinations) are to be treated as individual transactions. Each individual transaction involved in such a conference call should identify the same X-PCIA-AUDIO audio path.

7.4 Termination vCard Extensions

The 'termination.vcf' vCard contains the relevant identification information for the termination of the message.

If the Intercept Subject has forwarded messaging to another destination, then this vCard is mandatory with format as follows:

```
BEGIN:VCARD
VERSION:2.1
N:[Termination Subject's Name]
TEL:[Phone Number]
END:VCARD
```

where the [Termination Subject's Name] is the Termination Subject's name, or is a choice of the names 'not available', if not reasonably available, 'PIN Name', or 'System' depending on the nature of the termination point and reasonably available termination information. Additionally, use of the TEL:[Phone Number] property indicates the called number or address of the termination.

Conference calls (e.g., one call to multiple destinations) are to be treated as individual transactions. Each individual transaction involved in such a conference call should identify the same X-PCIA-AUDIO audio path.

7.5 Call Content

The AMI protocol Call Content is not utilized in an Ancillary Services transaction. All Call Content must be acquired through the Audio Delivery Point for LEA(s).

Call Content, available through the Audio Delivery Point for LEA(s), must be omitted in those instances where the Lawful Authorization does not specify collecting the Call Content.

7.6 New vCard Protocol Properties

The following property extensions are specific to the AMI protocol and use the vCard extension capabilities provided by the Miscellaneous Properties' Extensions section of the vCard v2.1 specification.

A valid fallback for recipients that do not support these protocol revision level parameter types is to map such a property into a comment property value.

7.6.1 Audio Path Identification

This property specifies the specific Audio Delivery Point for LEA(s) audio path to be monitored for lawfully authorized Call Content in Ancillary Services transactions as an 'X-' extension to vCard v2.1.

The property is identified by the property name **X-PCIA-AUDIO**. The Audio Path Identification is to be indicated as follows:

AudioPathIdentification **X-PCIA-AUDIO**

where X-PCIA-AUDIO is defined by an ASCII string representation of the audio circuit identifier.

Support for this property is mandatory for AMI protocol implementations conforming to this specification.

The following modified Backus-Naur Notation (BNF) extension to the formal definition in section 3.9 of vCard is provided to assist developers in building parsers for AMI vCards.

```
name        =    / "X-PCIA-AUDIO"
```

7.6.2 Audio Activity Status

This property specifies the active status of the audio content available from the indicated Audio Delivery Point for LEA(s) audio path to be monitored for lawfully authorized Call Content in Ancillary Services transactions.

The property is identified by the property name **AUDIOSTATUS**. The Audio Activity Status is to be indicated as follows:

AudioActivityStatus **AUDIOSTATUS=[audiostatusval]**

where audiostatusval is indicated as a number with format a; where 'a' represents either a [1] for [bridge completion] or [0] for [bridge release].

Support for this property is mandatory for AMI protocol implementations conforming to this specification.

The following modified Backus-Naur Notation (BNF) extension to the formal definition in section 3.9 of vCard is provided to assist developers in building parsers for AMI vCards.

```
param        =    / "AUDIOSTATUS" [ws] "=" [ws] audiostatusval
audiostatusval =  "0" / "1"
```

7.6.3 Examples

The following are examples of the use of these two related parameters:

X-PCIA-AUDIO;AUDIOSTATUS=1:1

X-PCIA-AUDIO;AUDIOSTATUS=0:A

X-PCIA-AUDIO;AUDIOSTATUS=1:st_louis.joe_n_pete_paging.com/1T234G78/

X-PCIA-AUDIO;AUDIOSTATUS=1:199.3.38.10:3048

References

CALEA Suite of Standards for Traditional Paging, Advanced Messaging, and Ancillary Services, v1.1, 11 February, 1999 (http://www.pcia.com/calea_specs_v1p1.zip)

CALEA Standard for Traditional Paging, v1.0, 04 May, 1998 (http://www.pcia.com/calea_specs_v1p1.zip)

CALEA Standard for Advanced Messaging, v1.0, 25 August, 1998 (http://www.pcia.com/calea_specs_v1p1.zip)

Communications Assistance for Law Enforcement Act, Pub. L. No. 103-414

IrDA® Telecom Extensions to the IMC vCard Format, v1.0, 15 October, 1997 (http://www.irda.org/)

Hypertext Transfer Protocol - HTTP/1.1, RFC 2068, January, 1997 (ftp://ds.internic.net/rfc/rfc2068.txt)

Lawfully Authorized Electronic Surveillance, TIA/ATIS, Interim/Trial Use Standard (J-STD-025)

Standard for the Format of ARPA Internet Text Messages, RFC 822, 13 August, 1982 (ftp://ds.internic.net/rfc/rfc822.txt)

Requirements for Internet Hosts - Application and Support, RFC 1123, October, 1989 (ftp://ds.internic.net/rfc/rfc1123.txt)

Multipurpose Internet Mail Extensions (MIME) Part One: Format of Internet Message Bodies, RFC 2045, November, 1996 (ftp://ds.internic.net/rfc/rfc2045.txt)

Multipurpose Internet Mail Extensions (MIME) Part Two: Media Types, RFC 2046, November, 1996 (ftp://ds.internic.net/rfc/rfc2046.txt)

Multipurpose Internet Mail Extensions (MIME) Part Three: Message Header Extensions for Non-ASCII Text, RFC 2047, November, 1996 (ftp://ds.internic.net/rfc/rfc2047.txt)

Multipurpose Internet Mail Extensions (MIME) Part Four: Registration Procedures, RFC 2048, November, 1996 (ftp://ds.internic.net/rfc/rfc2048.txt)

Multipurpose Internet Mail Extensions (MIME) Part Five: Conformance Criteria and Examples, RFC 2049, November, 1996 (ftp://ds.internic.net/rfc/rfc2049.txt)

Telecommunications Carrier Assistance to the Government, H. Rep. No. 103-827

vCard - The Electronic Business Card Exchange Format, v2.1, The Internet Mail Consortium (IMC), 18 September, 1996, (http://www.imc.org/pdi/vcard-21.doc)