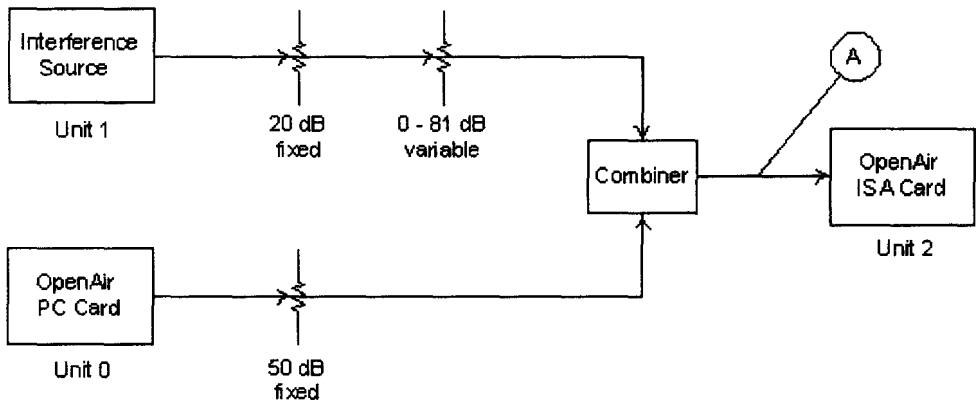

Figure A3-1: Measurement set-up for SIR of legacy FH system

All measurements were performed with Units 0 and 2 on a fixed hopping channel carrier frequency of 2440 MHz, with frequency hopping disabled. For interference measurements, the hopping channel carrier frequency of Unit 1 (with hopping also disabled) was varied between 2435 and 2445 MHz. The signal-to-interference ratio was calibrated at point A and the variable attenuator setting was noted for a 0dB signal-to-interference ("SIR") power ratio for this combination of units.

Following the calibration procedure, with Unit 1 on standby, Units 0 and 2 were configured for a packet error rate ("PER") test, with Unit 0 as the master sending RTS and DATA packets, and Unit 2 as the slave sending CTS and ACK packets. A fixed data packet size of 1466 bytes was used for all measurements. Under these conditions, no packet errors occurred. At this point, Unit 1 was configured to continuously transmit a CW signal or random data using the appropriate modulation depending on the choice of the interference source, for each channel frequency from 2435 to 2445 MHz. On each frequency, the variable step attenuator setting was varied to find the minimum attenuator setting at which packet errors were at or below 10%. The resulting

Signal to Interference Ratio ("SIR") was corrected by the attenuator setting obtained from the calibration procedure.

For the legacy DS interference measurements, a simulated IEEE802.11b signal was generated by multiplying the output of a TTL pattern generator with a 2.4 GHz carrier, as shown in Figure A3-2. A function generator operating at 11.000 MHz provided the external clock to the HP3780A pattern generator. The pattern generator was programmed to produce a pseudo-noise binary sequence with register length 15. The attenuated TTL output from the pattern generator was fed to the IF port of the mixer via a fixed coaxial attenuator and a simple L-network resistive attenuator. The mixer's LO port was fed by a microwave signal generator. Signal levels at the IF and LO ports were adjusted for linear operation of the mixer. A small DC current was injected into the mixer's IF port to improve carrier suppression. The mixer's low level output was amplified by a wide-band amplifier. For the DS interference measurements, the 20 dB fixed attenuator at the output of Unit 1 in Figure A2-1 was removed.

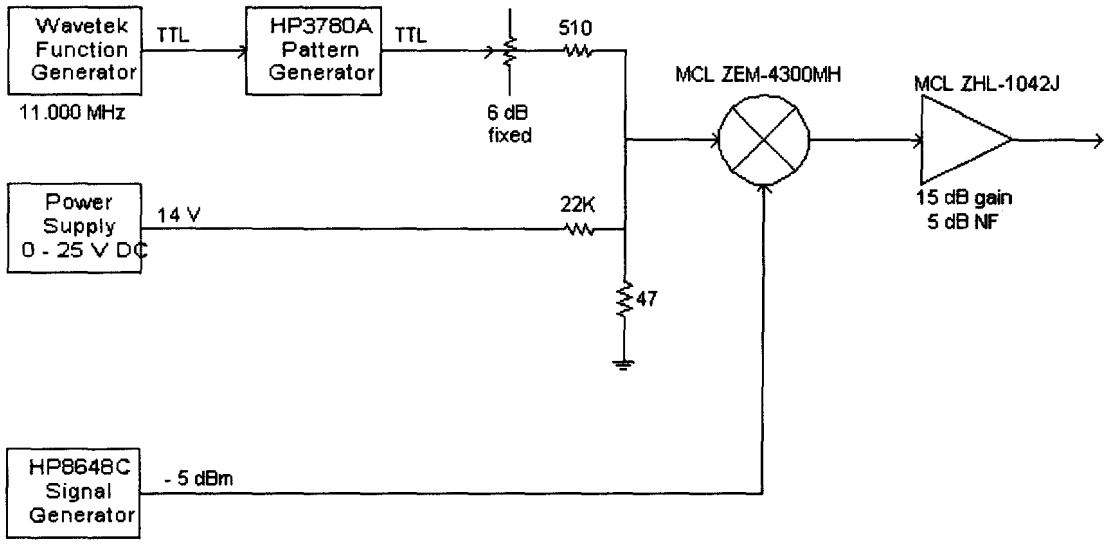

Figure A3-2: Equivalent IEEE802.11b signal source

The measured SIR results for the four interference sources are tabulated in Table A3-1. The frequency offset is the difference between the interfering carrier frequency and the frequency used by the desired signal link (2440 MHz). A negative result implies that the interfering signal was stronger than the desired signal. The 1-2 dB increase in SIR near 0 MHz offset for the DS case is due to a small peak in the DS spectrum at the carrier frequency caused by mixer imbalances. Without this peak, the SIR at 0 MHz is likely to be near 11 dB. Also shown in Table A3-1 is the "effective" SIR due to WBFH interference on the legacy FH target system when the 7 dB power reduction of WBFH is considered compared to the full power IEEE802.11FH baseline interference case. A full discussion of these results and their significance is given in Section IV-E-3.

Offset Frequency from center	Signal to Interference Ratio (dB)				
	CW	802.11FH	WBFH (as measured)	WBFH (effective)	802.11b 11 Mb/s DS
- 5 MHz	< - 30	< - 30	< - 30	< - 30	7
- 4 MHz	< - 30	< - 30	-20	-27	8
- 3 MHz	-29	< - 30	-8	-15	9
- 2 MHz	-24	-18	5	-2	10
- 1 MHz	14	15	18	11	11
Center (0)	11	14	18	11	12
+ 1 MHz	15	15	18	11	11
+ 2 MHz	-17	-11	5	-2	10
+ 3 MHz	-29	-28	-7	-14	9
+ 4 MHz	< - 30	< - 30	-19	-26	9
+ 5 MHz	< - 30	< - 30	< - 30	< - 30	8

Table A3-1: Measured SIR requirements of an existing FH receiver

2. Measurements Of Signal To Interference For Legacy DS.

Now consider the interference between the proposed WBFH radios and a legacy DS system compliant with the IEEE802.11b standard. In this case, the immunity of a commercially available IEEE802.11b wireless data link[5] to three types of interference was measured. The interfering sources included an unmodulated CW source, another commercially available 2.4GHz frequency hopping transmitter,[6] and the same early prototype of a WBFH transmitter complying with the proposed rules set forth in the NPRM as described in the previous section. The Aironet products were connected as shown in Figure A3-3, using double-shielded cables.

[5] The target legacy DS system is an Aironet 4800 PC Card and Access Point.

[6] An IEEE802.11FH compliant device was again used as an interference source. This is an appropriate baseline for FH interference since the Opponents use it as a baseline as well.

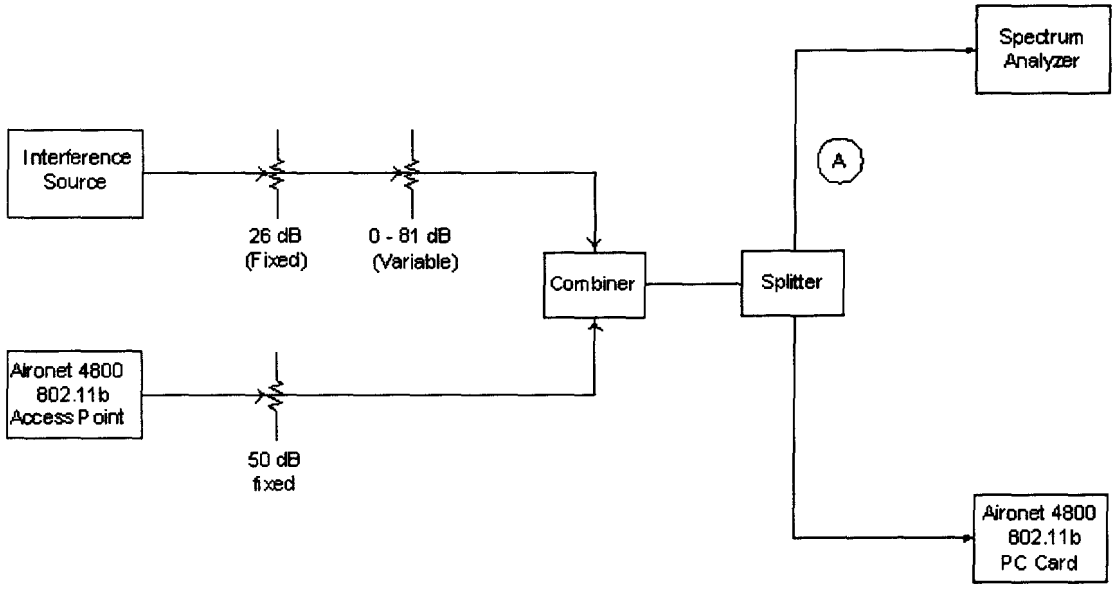

Figure A3-3: Measurement set-up for SIR of legacy DS system

All procedures were performed with the Aironet products on a fixed channel frequency of 2437 MHz and at full power (100mW). For each interference measurement, the channel frequency of the interferer was varied between 2425 and 2445 MHz, in 2 MHz increments. The signal-to-interference ratio ("SIR") once again was calibrated at point A and the variable attenuator setting was noted for a 0 dB signal-to-interference ratio.

Following this calibration procedure, the signal level of the interferer was reduced significantly so as not to impact data transmission between the Access Point and PC Card. Data packets were transferred between the devices to set a baseline. The interfering signal level then was gradually increased by 1 dB steps until the reference packet failure rate was observed as described previously for the legacy FH study. This process was repeated for offsets of +/- 8 MHz in 2 MHz steps for all three interference sources.

The measured results are summarized below in Table A3-2. It is obvious that WBFH has no significant effect upon IEEE802.11b system performance, other than slightly reduced interference as predicted by the analysis in Appendix 2. When the transmit power reduction of a further 7 dB is considered, WBFH is clearly far less of an interference problem for legacy DS systems than existing 15.247 FH products.

Offset Frequency from center	Signal to Interference Ratio (dB)		
	CW	802.11FH	WBFH (as measured)
- 8 MHz	3	2	3
- 6 MHz	6	6	6
- 4 MHz	8	8	8
- 2 MHz	8	8	8
Center (0)	9	9	8
+2 MHz	8	8	8
+ 4 MHz	8	8	8
+ 6 MHz	6	7	7
+ 8 MHz	2	3	3

Table A3-2: Measured SIR requirements of an existing DS receiver

B. MEASUREMENTS OF SYSTEM THROUGHPUT FOR EXISTING FH AND DS PRODUCTS IN THE PRESENCE OF WBFH INTERFERENCE.

Although the analyses of Appendix 2 and the above detailed signal to interference ratio measurements clearly show that WBFH will not cause additional interference to legacy FH and DS systems, consider now the ultimate experimental tests of simply measuring such systems in the field.

The coexistence potential or interference performance was assessed by comparing the effective throughput performance of each of the "Target" systems in a baseline condition (no interference present) to the effective throughput performance of

the same Target system in the presence of multiple independent interference "Sources." The coexistence potential between the various technologies is indicated by the percentage reduction in throughput from the baseline measurements. The following systems were considered:

Operating Targets:	Interference Sources:
IEEE802.11FH	IEEE802.11FH
IEEE802.11b (DS)	OpenAir (FH)
Bluetooth (FH)	IEEE802.11b (DS)
	WBFH

1. **Interference Test Combinations.**

Eight separate tests were performed. The available products functioned as both interference "Target" and "Source." Multiple combinations of products were tested, with the performance (throughput) of each Target measured in a zero-interference baseline condition, and during the period of potential interference, to assess the relative interference susceptibility of the Target.

The WBFH prototype system and Proxim OpenAir products served as interference Sources only. The Bluetooth demo system served as a Target only. The following tests were performed to simulate different combinations of products operating simultaneously in the same environment:

	Target	Source
Test #1:	IEEE802.11 FH	OpenAir
Test #2:	IEEE802.11 FH	IEEE802.11b DS

Test #3:	IEEE802.11 FH	WBFH
Test #4:	IEEE802.11b DS	WBFH
Test #5:	IEEE802.11b DS	IEEE802.11 FH
Test #6:	Bluetooth	IEEE802.11 FH
Test #7:	Bluetooth	IEEE802.11b DS
Test #8:	Bluetooth	WBFH

2. Interference Test Methodology.

Figure A3-4 shows the basic test arrangement.

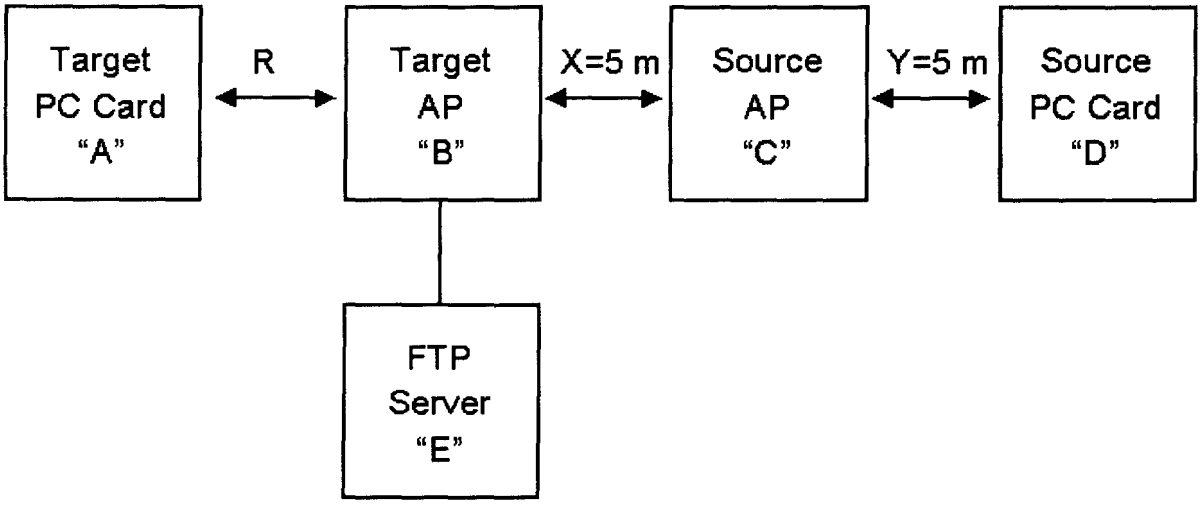

Figure A3-4: Measurement set-up for Coexistence testing

With respect to Figure A3-4, the following definitions apply:

"A" is a standard Pentium class laptop computer with the Target PC card and appropriate driver installed.

"B" is the Access Point product for the Target system, configured for default operation.

"B" is also connected to "E," the FTP server, through a 10baseT Ethernet connection.

"C" is the Access Point product for the Source system, configured for default operation. In the case of the Digianswer Bluetooth DemoCard/Developers Kit system, "C" is a standard Pentium class laptop computer with one of the Bluetooth PC cards and appropriate driver installed.

"D" is a standard Pentium class laptop computer with the Source PC card and appropriate driver installed.

"E" is a standard Pentium class laptop computer with a 10 Mbps Ethernet network card and FTP Serv-U FTP Server software installed. "E" is connected to "B" via standard Ethernet cable.

Distance "X" and "Y" were both fixed at five meters for each test to simulate a fixed infrastructure installation and constant fixed interference source.

Each test included separate baseline and interference measurements with dimension "R" set to the distance values below:

R0 1 meter

R1 5 meters

R2 10 meters

R3 20 meters

This test configuration was designed to simulate as reasonably as possible actual potential installation conditions. Typically, infrastructure APs would not be co-located at a distance of less than five (5) meters. Therefore, for these tests the distance between Target and Source APs remained at a fixed five meters to simulate a severe infrastructure installation condition. The distance between the Source AP and Source

client was also fixed at five meters, representing an average distance between a mobile interfering client and its infrastructure AP. Distances "X" and "Y" were held constant so that the only variable changed during each set of tests was "R," the distance between the Target AP and the Target client.

The relative performance of the Target systems in the presence of interference was the subject of these tests, so the configuration was designed to measure this performance in a controlled environment. Potential performance degradation of the Target systems was assessed by measuring the effective throughput of each system independently with no interference source present, and subsequently repeating the throughput measurements with the interference Source system in continuous operation.

To provide a continual interference source, the Source devices were configured to operate in their standard "Site Survey," or equivalent link test, mode to produce constant RF energy. Site Survey modes represent more severe or higher interference modes than normally seen with wireless LANs.

FTP file transfer rate was used to measure the effective throughput of the Target in both baseline and interference conditions. Multiple PUT and GET operations (3 each) were performed, with all six results averaged to produce a single throughput value for each test. The same binary file of approximately 1 Mbyte in size was used for all tests. The throughput value recorded for each measurement was the transfer rate value reported by the FTP function.

All testing was performed in a 3000 ft.^{2} open area within an 18,500 ft.^{2} warehouse facility. The test area was free of obstructions, and no known RF energy

sources were present. Figure A3-5 shows the test environment.

Figure A3-5: Measurement set-up at testing facility

3. Interference Test Equipment List.

The following products were operated as interference Targets and/or Sources during these tests. All commercially available products were operated at their factory default settings.

IEEE802.11 FH: Aironet 3500 Series

PC Card Antenna: 1.0 dBi snap-on (diversity)

PC Card Output Power: 200 mW

AP Antenna: Two, 2.2 dBi omni (diversity)

AP Output Power: 200mW

Modulation: 2 GFSK, 4 GFSK

IEEE802.11b DS: Aironet 4800 Series

PC Card Antenna: 1.0 dBi Snap-on (diversity)

PC Card Output Power: 100 mW

AP Antenna: Two, 2.0 dBi omni (diversity)

AP Output Power: 100mW

Modulation: CCK, BPSK, QPSK

OpenAir: Proxim RangeLAN2 (7402 PC Card, 7521 AP)

PC Card Antenna: 0dBi Snap-on

PC Card Output Power: 100 mW

AP Antenna: 1dBi omni

AP Output Power: 500 mW

Modulation: 4FSK, BFSK

Bluetooth: Digianswer DemoCard/Developer's Kit

PC Card Antenna: 20dBm Integrated

BT Spec. Version: Ver. 0.8

WBFH Prototype: Modified Proxim Symphony PC Card

PC Card Antenna: 2dBi Dipole

PC Card Output Power: 100 mW

Description: An early prototype of a WBFH transmitter complying with the proposed rules set forth in NPRM ET 99-231. The WBFH modulation parameters (h = 0.27, BT = 0.28) result in a spectrum with a 20dB bandwidth of approximately 3.6 MHz. Figure A3-6 shows the equipment

used to generate the wideband FH signal.

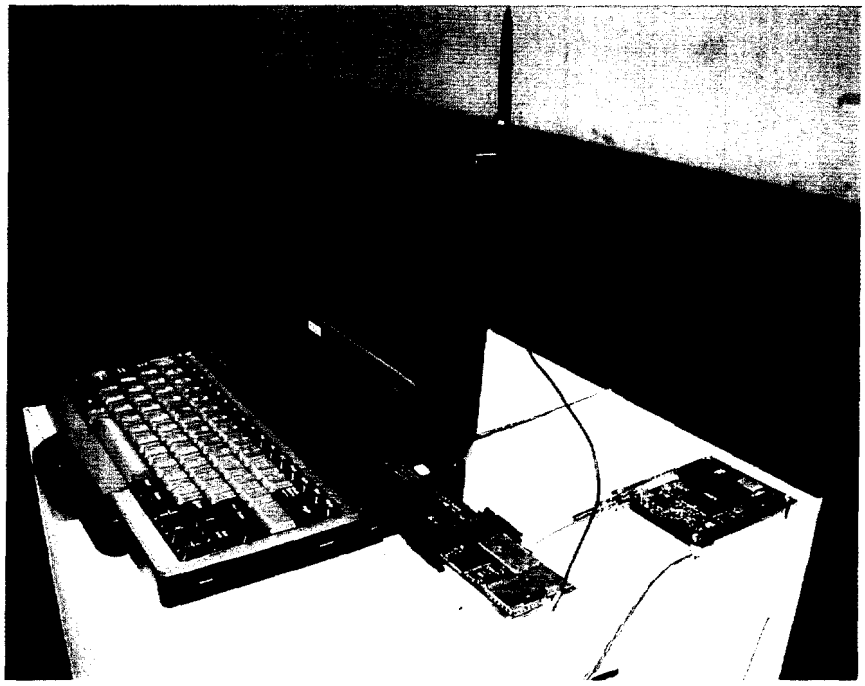

Figure A3-6: Photo of WBFH Prototype System used for Interference Testing

4. Interference Test Results.

The actual results obtained are summarized in Figures A3-7,8,9 below. In general, the throughput reductions due to interference are not severe and show little sensitivity to the type of interferer - existing FH, existing DS or WBFH. More discussion on these results is made in Section IV-E and IV-F.

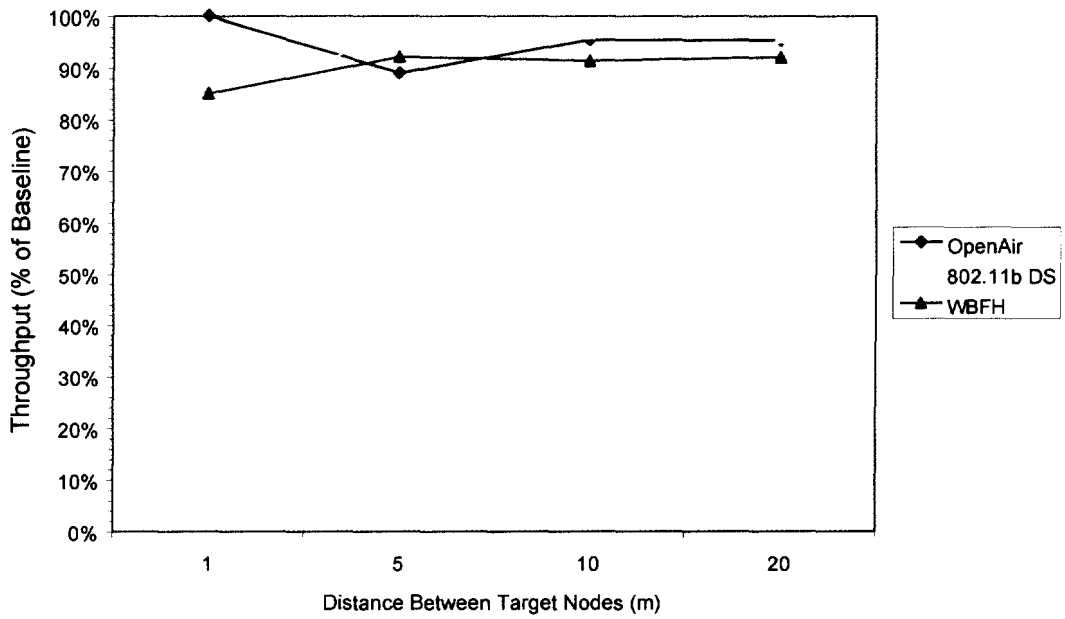

Figure A3-7: Measured throughput of an IEEE 802.11FH network with different interference sources as a percentage of a no interference baseline

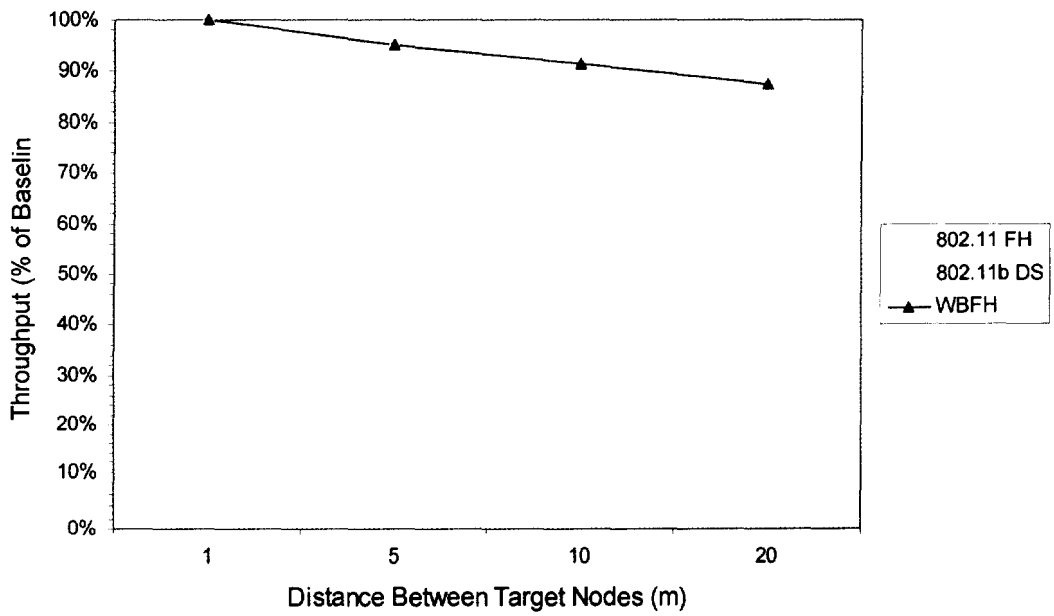

Figure A3-8: Measured throughput of a Bluetooth connection with different interference sources as a percentage of a no interference baseline

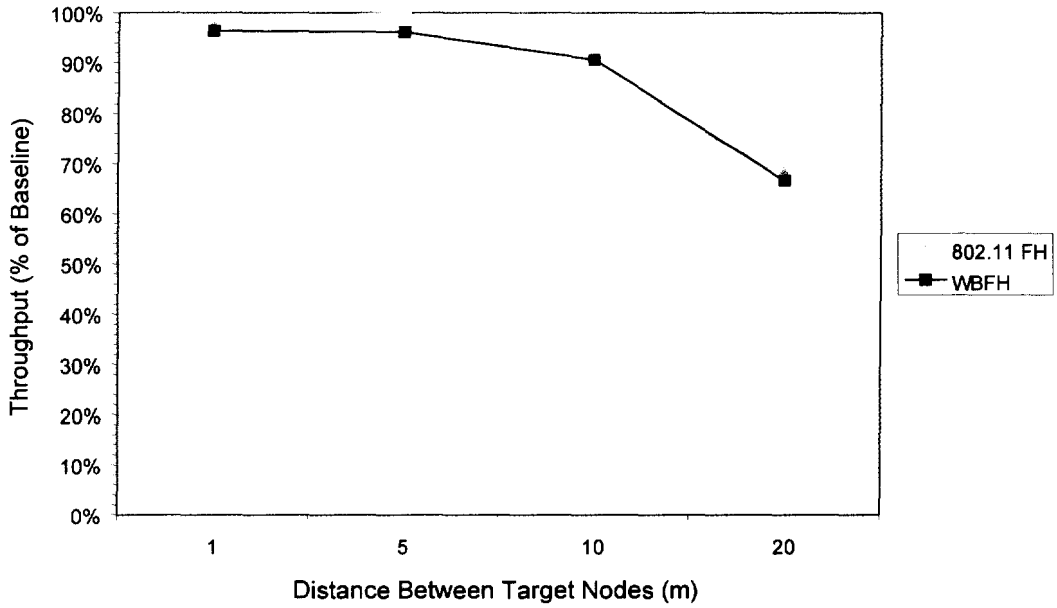

Figure A3-9: Measured throughput of an IEEE 802.11b DS network with different interference sources as a percentage of a no-interference baseline

TABLE OF CONTENTS

BACKGROUND AND STATEMENT OF INTEREST 2

I. WBFH SYSTEMS WILL PROMOTE THE UBIQUITOUS, TIMELY DEPLOYMENT OF BROADBAND TECHNOLOGIES IN THE HOME 9

A. *The Authorization Of WBFH Systems Will Revolutionize Communications In The Home* 9

1. The Power Of Broadband To The Home Will Be Realized Fully Only When Wireless Broadband Is Available Throughout The Home. 9

2. Frequency Hopping Is The Right Choice For The Convergence Of Voice And Data In The Home. 10

3. WBFH Will Enable Exciting New Applications For Broadband In The Home. 11

4. WBFH Supports The Commission's Initiative Of Enabling Americans With Disabilities To Realize Their Full Potential..... 12

B. *The Benefits Offered By WBFH Devices Can Be Realized Only If The Commission Amends Its Rules* 12

1. WBFH Systems Offer Benefits To Consumers That Cannot Be Matched By High-Rate Direct Sequence Devices 12

2. Frequency Hopping Devices Operating Under the Existing Rules Cannot Provide The Capabilities Of WBFH 13

3. Other Licensed And Unlicensed Alternatives Do Not Provide A Reasonable Alternative to WBFH 13

C. *WBFH Devices Will Save Consumers Billions Of Dollars* 14

II. TECHNICAL CONSTRAINTS WILL NOT IMPEDE WBFH PERFORMANCE ... 15

A. *Multipath Delay Spread Effects Will Not Limit Performance* 17

B. *Partially Overlapped Channels Will Not Limit Performance in the Home* 18

C. *WBFH Systems Will Be Able To Tolerate Any Interference Likely To Be Present In The Home* 19

III. SUPPORT FOR THE COMMISSION'S PROPOSAL IS WIDESPREAD AND BROADLY REPRESENTATIVE OF THE WIRELESS INDUSTRY AND THE USER COMMUNITY 23

A. *Bluetooth Does Not Oppose WBFH* 23

B. *The WECA And WLANA Oppositions Reflect These Groups' Interest In Maintaining An Unfair Advantage For High-Rate Direct Sequence Systems* 24

C. *The IEEE 802.11 Comments Do Not Reflect The Consensus View Of The IEEE* 24

IV. WBFH SYSTEMS WILL NOT INCREASE - AND IN MANY CASES ACTUALLY WILL DECREASE - THE INTERFERENCE EXPERIENCED BY OTHER USERS OF THE 2.4 GHZ BAND 26

A. *WBFH Interference Generally Will Be Much Lower Than The Interference Allowed Under The Existing Rules For FH And DS Systems* 26

B. *Existing FH And DS Systems Use Maximum Power Limits That Greatly Exceed The Proposed Allowance For WBFH* 29

C. *Hopping Rate is a Neutral Issue* 30

D. *Clear Channel Assessment Is Not a Relevant Issue* 32

E. *WBFH Systems Will Reduce Interference To Existing FH Systems When Compared To Existing 2.4 GHz FH Or DS Interferers* 33

1. The Opponents' Analysis Of Interference From WBFH To Existing FH Systems Is Flawed 33

2. The Opposing Parties Did Not Choose Realistic Baselines To Compare WBFH Interference Effects On Existing FH Systems ... 33

3. Measurements Show That WBFH Reduces Interference 35

F. *WBFH Systems Reduce Interference To Legacy DS Systems Compared With Existing 2.4 GHz FH Or DS Interferers* 38

1. The Opponents' Analysis Of Interference For Legacy DS Is Flawed 38

2. **Measurements, and Even the IEEE 802.11's Own Analysis, Show That WBFH Reduces Interference.** 39

G. *Opponents Of The Commission's Proposal Misstate the Facts In Their Opposition To Overlapping Channels* 40

V. WBFH SYSTEMS ARE IN THE PUBLIC INTEREST 42

A. *Proposed WBFH Rules Make Backwards Compatibility With Existing Systems Straightforward* 42

B. *Logical Back-off Modes For WBFH Improve Spectrum Sharing Etiquette Compared To Direct Sequence Alternatives* 43

C. *WBFH Systems Improve Overall Spectrum Efficiency As Compared To Direct Sequence Alternatives* 43

D. *Adoption Of The Commission's Proposal Would Improve Worldwide Harmonization Of FH Rules* 44

CONCLUSION 45

APPENDICES