expanding in the market are low and that equally efficient competitors can enter in response to profit opportunities. It is generally accepted that when barriers to entering a market are low, potential competition significantly disciplines the pricing behavior of existing firms in the market.[2] A credible threat of entry will induce firms in the market to price at or close to competitive levels with associated small losses in economic welfare. Therefore, the fact that CLECs are offering to provide service throughout a sufficient portion of an MSA indicates that barriers to entering the market are low so that the ILECs do not have the ability to price above the competitive level.

8. The general principle that market share is not a good predictor of market power has been accepted by the Commission and the antitrust enforcement agencies (the Department of Justice and the Federal Trade Commission) that are responsible for protecting consumers and competitors from being exploited by firms with market power. The Commission has already rejected the use of market share as the primary means to determine market power. In its *AT&T Non-Dominant Order*, the Commission stated:

> It is well-established that market share, by itself, is not the sole determining factor of when a firm possesses market power. Other factors, such as demand and supply elasticities, conditions of entry and other market conditions must be examined to determine whether a particular firm exercises market power in the relevant market.[3]

The Department of Justice and the Federal Trade Commission in their *Horizontal Merger Guidelines* also recognize that market share is not a sufficient condition for the possession of market power. While the *Merger Guidelines* do examine market concentration, they also take conditions of entry into account in determining whether to enjoin a merger:

> A merger is not likely to create or enhance market power or to facilitate its exercise, if entry into the market is so easy that market participants, after the merger, either collectively or unilaterally could not profitably maintain a price increase above premerger levels...Entry is that easy if entry would be timely, likely, and sufficient in its magnitude, character and scope to deter or counteract

[2] See, e.g., W.J. Baumol, J.C. Panzar and R.D. Willig, *Contestable Markets and The Theory of Industry Structure*, New York: Harcourt Brace Jovanovich, Inc., 1982.

[3] In the Matter of Motion of AT&T Corp. to be Reclassified as a Non-Dominant Carrier, FCC 95-427, Released October 23, 1995, ¶ 68, ("*AT&T Non-Dominant Order*").

> the competitive effects of concern. In markets where entry is that easy (i.e., where entry passes these tests of timeliness, likelihood, and sufficiency), the merger raises no antitrust concern and ordinarily requires no further analysis.[4]

9. In fact, AT&T's position in this proceeding—that ILEC pricing flexibility should be tied to a market share test—is entirely inconsistent with previous positions it has taken when the shoe was on the other foot. In the *AT&T Non-Dominant Order,* AT&T disputed the position of other parties who argued that AT&T possessed market power because it still retained a high percentage of the interstate interexchange market. AT&T's position in that proceeding was summarized by the Commission in the following:

> Moreover, AT&T argues that the Commission has long recognized, and no commenter in this proceeding has disputed, that market share is the least important and reliable indicator of market power, especially in markets with high supply and demand elasticities.[5] (footnote omitted)

And,

> Relying on the *First Interexchange Competition Order*, AT&T claims that the Commission has found that a substantial market share "is not wholly incompatible with a highly competitive market.[6] (footnote omitted)

10. Any trigger chosen by the Commission that provides the ILECs with pricing flexibility must be forward-looking and closely related to the ability or inability to price above the competitive level. One of the fundamental problems with using a market share trigger in telecommunications is that regulation (through entry and price restrictions) invalidates what can normally be learned (and used for antitrust purposes) from market share information about the structure, conduct and performance of a market. That is, the aggregate market share of the ILECs has more to do with past regulation than with the level and intensity of competition. This point is recognized in the economics literature by Professors Landes and Posner:

> In view of the growing importance of antitrust enforcement in regulated industries, we shall note briefly the significant limitations of our formal analysis when applied to a market in which rates are regulated by a government agency.

[4] Department of Justice and Federal Trade Commission, *Horizontal Merger Guidelines*, April 2, 1992, p. 47.

[5] *AT&T Non-Dominant Order*, ¶ 43.

[6] *Ibid.*, ¶ 41.

> To the extent regulation is effective, its effect is to sever market power from market share...Regulation may increase a firm's market share in circumstances where only the appearance and not the reality of monopoly power is created thereby.[7]

11. In addition, the proposals of AT&T and Time Warner Telecom are particularly deficient because they advocate measuring market share based on customer locations rather than a more appropriate measure such as capacity.[8] Market share can be measured in terms of output, revenues, or productive capacity. In the *AT&T Non-Dominant Order*, the Commission recognized the importance of capacity. If rivals have capacity in place that can be brought on line at low additional cost so that the customer has a real choice of suppliers, the incumbent firm cannot exercise market power. Indeed, in the *AT&T Non-Dominant Order*, AT&T argued not for use of customer location as the proper measure of market share (as it does in this proceeding) but rather for use of capacity. In that proceeding the Commission summarized AT&T's position as:

> Thus, AT&T argues that market share figures based solely upon output—rather than on total available capacity—distort the importance of market share as an indicator of market power.[9]

In economic theory, Landes and Posner present a compelling case for assessing the competitive significance of challengers by taking into account not just their actual output but their *total physical capacity*:

> ...the sum of the capacity, or potential output, of competitors and the current output of the firm in question should be the denominator in computing the firm's market share. The greater the difference between capacity and current output, the greater is the supply elasticity of competing firms, and therefore the greater is the constraint that these firms place on a firm that tries to raise price above marginal cost.[10]

---

[7] William M. Landes and Richard A. Posner, "Market Power in Antitrust Cases," *Harvard Law Review*, Volume 94:5, March 1981, pp. 975-976.

[8] AT&T Comments at 10, Time Warner Comments at 26.

[9] *AT&T Non-Dominant Order* ¶ 42.

[10] William M. Landes and Richard A. Posner, "Market Power in Antitrust Cases," *Harvard Law Review*, Vol. 94, 1981, p. 949.

In addition, the *Horizontal Merger Guidelines* set forth the respective bases for using dollar sales or physical sales:

> Market shares will be calculated using the best indicator of firms' future competitive significance. Dollar sales or shipments generally will be used if firms are distinguished primarily by differentiation of their products. Unit sales generally will be used if firms are distinguished primarily on the basis of their relative advantages in serving different buyers or groups of buyers. Physical capacity or reserves generally will be used if it is these measures that most effectively distinguish firms.[11]

Finally, arguing on behalf of AT&T in a Docket in California in the early 1990s, Dr. John Mayo also recognized the benefits of using market share based upon a measure of capacity:

> While both revenues and minutes-of-use are more readily accessible, the use of capacity as the basis for market share calculation is theoretically preferable. Specifically, capacity-based market share figures reveal the ability of existing firms to rapidly expand output.[12]

Dr. Mayo also correctly cautions against the use of market share to infer market power in the long distance telecommunications industry, observing that "...market share statistics must be used with extreme caution, lest they become more a source of confusion than insight regarding market power."

12. Another problem with using market share to trigger ILEC pricing flexibility is that it provides market participants with perverse incentives. First, the proposal creates obvious distortions in the ILECs' incentives to compete. If pricing flexibility were conditioned on losing a certain number of customers, ILECs would have less incentive to do the things necessary to keep customers and the intensity of competition would suffer: in some cases, the rational thing may be <u>not</u> to compete aggressively to retain certain customers. Even once pricing flexibility is granted, the ILEC must be cautious not to compete too well less it increases its market share and risk having price regulation re-imposed. Second, the use of market share to trigger pricing flexibility imposes perverse incentives on competitors as well.

[11] US Department of Justice and Federal Trade Commission, *Horizontal Merger Guidelines*, April 2, 1992, Section 1.41.

[12] Testimony of Dr. John Mayo On Behalf of AT&T Communications, Inc (U 5002 C), Before the Public Utilities Commission of the State of California, September 21, 1990, p. 13.

Asymmetric regulation benefits competitors because it increases the ILEC's costs and prices and makes it easier to compete. As a result, competitors will take into account the effect of their actions in the marketplace on the timing of ILEC pricing flexibility. In fact, using market share as a trigger creates a form of "moral hazard" because competitors, by deciding which customers to target and serve (and, more importantly, which customers not to serve), will have the ability to determine the timing of ILEC pricing flexibility.[13] Once again the end result is a reduction in the intensity of competition.

13. The likely effect of adopting AT&T and Time Warner Telecom's proposal to use a market share trigger is a reduction in economic welfare. As discussed above, market share is extremely limited in its ability to provide meaningful and accurate information about whether ILECs possess market power in the supply of access services. A more meaningful trigger would instead focus on examining the barriers to entering and expanding in the relevant geographic markets. If the Commission adopts the intervenors' proposals and uses market share as the trigger to condition pricing flexibility errors will ultimately occur. Specifically, use of market share as the trigger will inevitably lead to pricing regulation being applied beyond the optimal period of time—that is, even though an ILEC would possess no market power its prices would still be regulated. This results in reductions in economic welfare for several reasons.

14. Consumers are denied lower prices. Applying regulation when it is not economically necessary distorts the market because it moves the market outcome away from the competitive outcome. Unnecessary regulation increases a firm's costs which is ultimately reflected in higher prices. Consumers purchase fewer units of the product at a higher price. Although there are customers that value the product at least as high as the competitive price, they are denied the ability to purchase the service and, as a result, losses in efficiency occur. These losses are of second-order magnitude, however, because they affect only the customers who have been rationed out of the market. A greater harm from applying unnecessary regulation on the ILECs

[13] Moral Hazard occurs when an insured party can affect the probability or magnitude of an event against the occurrence of which it is insured. See, Robert S. Pindyck and Daniel Rubenfeld, *Microeconomics*, 4th Edition, 1997.

is the increase in the cost of producing services. These losses are of first-order magnitude because they apply to each unit produced by the ILEC. Moreover, higher ILEC prices provide a window for less-efficient competitors to succeed. Because of the unnecessary regulation, market supply is distributed among some firms whose existence is solely due to asymmetries in regulation not to lower cost or superior market performance. The end result is both static and dynamic inefficiency: society uses too many scarce resources to produce access services and unnecessary restrictions dampen ILECs' incentives to invest in new technology and infrastructure modernization.

III. THE COMMISSION SHOULD NOT ADOPT A Q FACTOR IN THE TRAFFIC-SENSITIVE PCI FORMULA

15. Several parties recommended the adoption of a q factor to adjust the traffic-sensitive PCI formula for the alleged recovery on non-traffic sensitive costs on a usage basis.[14] Prodded by the phantom of excessive ILEC profits, these parties are looking for ways to fix a problem that simply does not exist. AT&T asserts [at 17] that "[a] "q" factor will properly adjust the LEC's traffic-sensitive PCI as a result of IXC-initiated growth in local switching minutes and/or trunks." It claims [at 17] that "[t]he same reasons for including the g factor in the common line formula also support the adoption of a q factor for the traffic-sensitive basket." Specifically, AT&T argues [at 18], that "most of the revenue in the traffic-sensitive basket comes from local switching, the costs of which tend not to increase with growth in traffic."

16. As to the first point (the proposition that growth in local switching minutes is due to IXC efforts) the argument that the agent that causes output growth is somehow entitled to its benefits has no basis in economics.[15] And, as a factual matter, a more likely explanation of growth in local switching volumes is that long distance price reductions caused by reductions in

[14] AT&T Comments at 17; Ad Hoc Telecommunications Users Committee Comments at 6;

[15] In a competitive market, for example, reductions in input prices stemming from productivity gains by equipment manufacturers will lead to lower output prices and a stimulation of both final demand for service and demand for equipment. The effect of that demand stimulation on earnings or profits depends on competition in the input market and competition in the output market, and the (assumed) fact that productivity growth in the input market caused the stimulation in demand plays no role in determining the resulting change in profits from the expansion in demand.

carrier access charges stimulated the observed increases in demand. I discussed these points in detail in my Comments [at 23] and do not repeat them here. In the remainder of this Section, I respond to AT&T's assertion that the costs of local switching tend not to increase with growth in traffic and (in AT&T's view) it is appropriate, therefore, to include a q factor in the traffic-sensitive PCI formula.

17. It is first worth noting that no party provided any meaningful economic analysis to defend the need for a q-factor or a g/2 factor. As for the claim by MCI [at 16] that g/2 should be increased to a full g, as I discussed at length in my Comments [at 22-24] g/2 should have already been eliminated because retaining it in the common line PCI formula double counts productivity growth

18. As for the q-factor, as I discussed at length in my Comments [at 17-21] on a going forward basis, there should not be a q factor included in the traffic-sensitive PCI. Since the X-factor in place already accounts for all costs and revenues, a formula that includes an adjustment for demand growth would effectively double-count a component of historical productivity gains already reflected in the measure of total factor productivity ("TFP"). Because the X-factor in the annual price adjustment formula was set using historical growth in TFP, even if AT&T were correct (which it is not) that the costs of local switching tend not to increase with the growth in traffic, the use of TFP precludes earnings windfalls stemming from the possible misalignment between the manner in which costs are incurred and recovered.

19. Indeed, AT&T's position (on which they base their conclusion that a q factor is necessary) that the costs of local switching tend not to increase with the growth in traffic is simply incorrect. AT&T's evidence for such an assertion is contained in its statement [at 18] that

> [d]espite substantial growth in local switching minutes over time – 66% growth from 1991 to 1998 for the RBOCs – expenses and investments associated with local switching in ARMIS have declined substantially over time.

which they support by attaching various tables of ARMIS data to their Comments. There are several reasons why AT&T's assertion is incorrect.

20. As an empirical matter, AT&T's assertion is based on the observation that local switching minutes have been growing since the early 1990s but local switching expenses and investment have decreased over the same period of time (AT&T Attachments A and B). However, AT&T's conclusions are flawed for several reasons. Telecommunications production is characterized by inputs that are common to many services: *e.g.,* a single switch handles local, long distance, carrier access and ISP-bound traffic. In order to attempt to estimate investment, expenses and earnings at the level of an interstate price-cap basket, some type of separations process is needed. But therein lies the fundamental problem because the separations process is economically arbitrary. The data trends in AT&T's Attachment B are driven more by an economically meaningless jurisdictional separations process than by forward-looking economic market conditions, and thus the conclusions AT&T reaches from the data in Attachment B are specious.

21. Specifically, there have been several major Part 36 and Part 69 rule changes during the time period in question and increased internet usage all of which have significantly reduced investment and expenses allocated to the interstate local switching category.[16] These changes began in 1988 when the allocator of local switching investment was phased in to pure dial equipment minutes ("DEM"). This phase-in was completed in 1993. In 1993, Part 69 rules changed, shifting a significant amount of general support facilities from the interstate access cost categories to the common line cost category. And finally, in 1998, Part 69 rules changed again to shift interstate line port costs from the interstate local switching cost category to the common line cost category. Moreover, as I discussed in my Comments [at 14] internet-bound minutes are assigned to the intrastate jurisdiction even though, as the Commission has determined, calls made to Internet destinations are jurisdictionally interstate rather than local.[17] The result is that the DEM factor has declined because of these separations rule changes and increased internet usage, and the impact has been to assign less switching investment and

[16] USTA *ex parte* submission, Local Switching Rate Structure and Access Reform, July 13, 1999.

[17] FCC, *In the Matter of Implementation of the Local Competition Provisions in the Telecommunications Act of 1996* and *Inter-Carrier Compensation for ISP-Bound Traffic*, CC Docket Nos. 96-98 and 99-68, Declaratory Ruling in CC Docket No. 96-98 and Notice of Proposed Rulemaking in CC Docket No. 99-68 ("*Internet Traffic Order*"), released February 26, 1999.

expenses to the interstate jurisdiction. The impact of all these jurisdictional accounting adjustments and increased internet usage has been to render meaningless AT&T's assertion that local switching investment and expenses have decreased since 1992. Thus, by AT&T's own logic it also renders meaningless its assertion that the costs of local switching tend not to increase with the growth in traffic.

22. Moreover, alleged excessive earnings are the underlying motive for AT&T's investigations into the relationship between local switch costs and growth in traffic. However, when one examines data based on the total unseparated company view, significantly different conclusions emerge—specifically, RBOC return to capital has not been unusually high during the price cap period.[18] Attachment A to Professor Gollop's *Reply Comments* on behalf of USTA replicates and updates the FCC X-Factor model described in Appendix D of the Commission's May 1997 *Fourth LEC Price Cap Performance Review*.[19] Attachment A contains two important pieces of evidence that directly contravene the proposition that price-cap LEC earnings have been high (and therefore contravenes AT&T's position that the explanation must lie in the misalignment between the manner in which local switching costs are incurred and recovered).

23. First, according to the Commission, in their TFP calculation the weight given to the capital services input when it is aggregated with labor and materials inputs is based on the capital cost, which is the product of the implicit rental prices of the total capital stocks for the asset categories.[20] The Commission accepted AT&T's methodology for calculating the weights for the capital input (the implicit rental prices). Specifically, the Commission stated:

> We find that AT&T's residual earnings method is a more accurate estimate of the contribution of capital to the production of output than USTA's method of measuring rate of return, because AT&T's method measures actual payments to capital.[21]

[18] In my Comments [at 15] I used data from the Value line Industrials to argue that, on a comparable basis, neither the level nor the growth in price cap LEC interstate or intrastate earnings are out of the range observed in unregulated competitive markets.

[19] In the Matter of Price Cap Performance Review for Local Exchange Carriers, CC Docket No. 94-1, 96-262, ¶150 (*Fourth LEC Price Cap Performance Review*).

[20] *Ibid.*, ¶ 70.

[21] *Ibid.*, ¶ 72.

Chart D9 column H in Professor Gallop's Attachment A updates the capital rental price which the Commission claims is the gross return to capital.[22] There are a few observations that stand out from analyzing the gross return to capital. First, contrary to the hypothesis that the RBOCs have experienced a windfall during the price cap regime, gross returns to capital have remained fairly constant during the period 1985-1998 averaging approximately 20.9%. A comparison of gross return on capital during the pre (1985-1990) and post (1991-1998) price-cap period, however, reveals that gross return to capital has been lower during the post price-cap period. Gross return on capital in the post price-cap period is 19.7% compared to 22.5% during the pre price-cap period.[23] Thus, when looked at the more appropriate total company level, the data on RBOC gross returns on capital during the price-cap period do not support the proposition that the RBOCs have experienced a windfall.

24. Second, chart D3 in Professor Gollups' Attachment A updates information on total RBOC revenues, interstate revenues and interstate revenue as a percent of total revenue. As can be seen, interstate revenues as a percent of total company revenues has remained fairly constant during the 1985-1998 period averaging approximately 25.7%. And, like gross return to capital, interstate revenues as a percent of total company revenues have been lower during the post price-cap period (25.4%) than in the pre price-cap period (26.1%).[24] Even if it were true (which it is clearly not) that the source of the alleged high earnings is the misalignment between switch usage and cost recovery (i.e, growth in revenue not corresponding to growth in costs) because there has been no explosion in interstate revenue during the price-cap period, the magnitude of the problem (if it existed) is likely small.

25. There are also conceptual reasons why AT&T's assertion that switching costs tend not to increase with traffic is incorrect. First, because traffic-sensitive switching is only a small piece of overall interstate and total company costs, even if AT&T were correct, overearnings for this component would imply, as a matter of arithmetic, that other components were underearning. If the Commission were to follow AT&T's advice and remove alleged excess earnings from the

[22] *Ibid.*, ¶ 93.

[23] The difference is statistically significant at the 5% confidence level.

[24] The difference is statistically significant at the 5% confidence level.

traffic sensitive basket, the ILEC would end up underearning on an interstate or total company basis.

26. Second, the observation by AT&T that local switching minutes have grown while ARMIS investment and expenses associated with local switching have declined reveals only that average separated accounting costs have declined—as described above, it is an economic meaningless observation,[25] revealing practically nothing about the relationship between forward-looking incremental switching costs and switching usage.

27. Third, the implication of the assertion that switching costs tend not to increase with traffic is that there are practically no usage sensitive costs associated with switching only fixed and volume insensitive costs. This assertion is simply factually incorrect. As noted in the Commission's *Access Charge Reform Order*, switching equipment and resources whose costs are recovered in the traffic-sensitive basket are, for the most part, shared among the cost-causing customers whose usage brings into existence those costs.[26] By definition, the costs of equipment and resources that are shared among customers and finite in their capacity to provide service are not invariant to usage.

28. The costs of shared resources vary with the use customers make of those resources. The costs of the switch processor and switch matrix are recovered in the traffic-sensitive basket and call attempts and minutes of use cause the capacity of the switch processor and switch matrix, respectively, to exhaust. As a result, call attempts and minutes of use are the cost drivers of the switch processor and switch matrix. And because each additional call attempt and minute of use advances the time that the resource's capacity will exhaust, the end user who places an

[25] As discussed, above, the arbitrary nature of the separations process and the accounting adjustments that have taken place (plus increased internet usage) call into question the relevancy of AT&T's comparison. Nevertheless, there are other explanations (beside the one proffered by AT&T that there is a misalignment between the manner in which switch costs are incurred and recovered) for why switch minutes can grow more rapidly than expenses and investments, such as changes in a firm's efficiency and changes in average capacity utilization.

[26] In the Matter of Access Charge Reform (et. al.), CC Docket No. 96-262, 94-1, 91-213, 95-72, (*Access Charge Reform Order)*. As a result of this Order, the Commission has made considerable progress in ensuring that the costs of dedicated facilities are recovered through flat charges while the costs of shared facilities are recovered through per-usage charges (currently per minute charges). The shared switching facilities whose costs are recovered in the traffic-sensitive basket are the switch processor and switch matrix.

additional call or who remains on the line an additional minute is causally responsible for increasing switching costs and should therefore face the correct economic price for her usage.

29. The fact that switching costs increase with traffic volume is by no means controversial. I am unaware of any forward-looking economic switch model which fails to recognize this fundamental proposition. In fact, the HAI model of which AT&T is a sponsor—for all its faults—at least properly recognizes that switching costs increase with minutes of use,[27] as does Telcordia's SCIS model. It is in part for these reasons that the state PUCs that have determined the costs of switching recover those costs on a minute of use basis.

30. Finally, AT&T's suggestion [fn. 30] to use the growth in local switching volume as the q factor in the traffic-sensitive PCI formula is economically flawed and not related in any way to the manner in which RBOCs experience changes in unit costs. As described above, AT&T's suggestion is based on the erroneous hypothesis that switching costs are usage invariant. For every 1% growth in switching minutes AT&T's suggestion would have the preposterous effect of reducing the PCI by 1% as well. AT&T's suggestion is wrong for two reasons: (i) switch costs do in fact vary with usage and, (ii) as described in my Comments [20], the X-factor in the annual price adjustment formula was set using historical growth in TFP, so that even if there were a misalignment in the manner in which costs are incurred and recovered (which there is not), a q factor would not be necessary to ensure that price cap LECs do not recover more than their costs.

IV. CONCLUSIONS

31. The proposals by AT&T and Time Warner Telecom to base Phase II pricing flexibility primarily on a market share test is bad economics, has already been rejected by the Commission in previous cases that examined whether AT&T possessed market power, and is directly counter to AT&T's position in the *Non-Dominant Order*. The Commission should reject these proposals. Conditioning relief on market share tests ignores whether ILECs have the ability to price above competitive levels for a sustained period of time—that is, the proposals fail to measure market power and the end result of adopting these proposals would be

a reduction in economic welfare because consumers are denied lower prices. Rather, sufficient presence of competitors in a relevant economic market offering to provide services to the public indicates that barriers to entering and expanding in the relevant market are not prohibitive and has the effect of disciplining the pricing behavior of the dominant firm.

32. AT&T's recommendation to adopt a q factor in the traffic-sensitive PCI formula is based on the erroneous position that the costs of local switching do not increase with traffic. The Commission should not adopt such a q factor because: (i) switch costs do in fact vary with usage and, (ii) the fact that the X-factor in the annual price adjustment formula was set using historical growth in TFP means that, even if there is a misalignment between the manner in whih costs are incurred and recovered (which there is not), no q factor is required. For the same reason as (ii), instead of increasing the g/2 factor in the common line PCI formula, it should have already been eliminated.

[27] In its default applications, the HAI model assigns 70 percent of switching costs to minutes-of-use.

ATTACHMENT 2

COMMENTS OF
BRIAN S. DELIDOW and
STEVE G. PARSONS, Ph.D.

NOVEMBER 29, 1999

BEFORE THE
FEDERAL COMMUNICATIONS COMMISSION

IN THE MATTER OF	)	
	)	
ACCESS CHARGE REFORM	)	**CC DOCKET No. 96-262**
	)	
PRICE CAP PERFORMANCE REVIEW FOR LOCAL EXCHANGE CARRIERS	)	**CC DOCKET No. 94-1**
	)	
INTEREXCHANGE CARRIER PURCHASES OF SWITCHED ACCESS SERVICES OFFERED BY COMPETITIVE LOCAL EXCHANGE CARRIERS	)	**CCB/CPD FILE No. 98-63**
	)	
PETITION OF US WEST COMMUNICATIONS, INC FOR FORBEARANCE FROM REGULATION AS A DOMINANT CARRIER IN THE PHOENIX, ARIZONA MSA	)	**CC DOCKET No. 98-157**

COMMENTS OF

BRIAN S. DELIDOW AND
STEVE G. PARSONS, Ph.D.

PREPARED AS AN ATTACHMENT TO THE REPLY COMMENTS OF THE

UNITED STATES TELECOM ASSOCIATION

NOVEMBER 29, 1999

COMMENTS OF BRIAN S. DELIDOW
AND STEVE G. PARSONS, PH.D.
NOVEMBER 29, 1999

1. I am Steve G. Parsons, Vice President of Regulatory & Litigation Support at INDETEC International. I was previously with Southwestern Bell Telephone serving in the role of Regulatory Economist where part of my responsibilities included acting as the internal economics consultant to the cost studies organization. Prior to working at SWBT, I was the Staff Vice President of Economic Analysis at the Dallas-based consulting firm Criterion Inc. I have a Ph.D. from the University of California at Santa Barbara where I was both an Earhart Foundation Fellow and a University of California Regents Fellow. I have served as an adjunct faculty member at eight universities including Washington University in St. Louis where I teach the economics of telecommunications and information systems as well as telecommunications regulation and policy for a specialty telecommunications masters program in the School of Engineering. I have made many professional presentations and written many professional papers analyzing economic issues in telecommunications. My publications have appeared in such journals as the *Yale Journal on Regulation, The Administrative Law Review, Economics Information and Policy*, *Journal of Regulatory Economics* and *The Southern Economics Journal*. I have taught cost studies, pricing and applied economics and business courses through Bellcore, Criterion, ICORE Training Systems, APPA, Southwestern Bell, and INDETEC for well over a decade. I have served as testifying economic expert over thirty times. I have dealt with the issues of: economic costs, cost proxy models, cost model estimates, price levels and structures, imputation, competitive cost standards and safeguards, unbundling, resale, bypass and factor substitution, competitive assessment, regulatory reform, deregulation, and universal service mechanisms.
2. I am Brian S. Delidow Vice President Consulting Services at INDETEC International. I was previously with Bell Communications Research serving in the role of switching cost expert where part of my responsibilities included development of cost models for

switching, transport and CCS7 as well as acting as a network cost consultant to global service providers. I also worked with AT&T (what is now part of Lucent Technologies) as a Project Manager for the development of wireless infrastructure equipment. I have a M.S. in Applied Mathematics from Rensselaer Polytechnic Institute in Troy, NY where I also pursued doctoral studies and my B.S. in Mathematics from the University of Michigan at Ann Arbor. In my various roles with INDETEC, I have made many professional presentations, critically reviewed cost studies, provided expert testimony, taught courses on the preparation of cost studies and developed costing models.

3. We have been asked by members of the United States Telecom Association ("USTA") to respond to the comments of AT&T and MCI (responding to issues raised by AT&T in the Federal Communication Commission's ("Commission") *Further Notice of Proposed Rulemaking* ("*FNPRM*"), released on August 27, 1999). Specifically, we comment on the nature of telecommunications economic switching costs and the extent to which these costs are caused by traffic (minutes and messages). It is our conclusion that there are significant local switching costs that are caused by messages and minutes.

4. To lay the groundwork for evaluating the comments of AT&T and MCI, it is useful to consider the relevant language of the Commission's FNPRM. At ¶ 207 the Commission seeks comment on "replacing the existing per-minute or per-call local switching rate structure rules with a capacity-based rate structure." This proposal appears to be based (at least in part) upon the concept of choosing cost recovery mechanisms (price structures) that better reflect cost structures. For example, at ¶ 209 the Commission uses the example of the costs of line cards as a "non-traffic-sensitive" cost which should appropriately be recovered "through non-traffic sensitive rates."

5. In addition, at ¶ 210, the Commission discusses "shared local switching costs" as "i.e., local switching costs other than the costs of line cards and trunk ports," and which "could be reasonably recovered through either flat or per-minute rate structures ..."

6. AT&T and MCI both oppose the FCC's proposed "capacity-based charge" (see, e.g., AT&T at ii, and MCI at 10). Both apparently take this position based at least in part upon an indication that some switching costs are traffic sensitive. For example AT&T states (page ii): "... a capacity-based rate structure for local switching should not be adopted because there is no evidence that more switching costs should be recovered on a per-trunk basis than reflected in the LEC's January 1, 1998 tariffs" and "... a capacity-based charge would not capture peak demand any better than a per-minute charge." AT&T also states (page 19): "...AT&T's own experience that growth in trunks tends to mimic the growth in traffic volumes." MCI states (page 10): "in all probability, local switching costs for tandem-switched transport would continue to be assessed on a per-minute basis, derived from per-trunk rate using some type of complex equivalency formula."
7. In contrast, at page 15, MCI states: "a portion of the remaining local switching costs are NTS." AT&T states (page 18): "moreover, most of the revenue in the traffic-sensitive basket comes from local switching, the costs of which tend not to increase with growth in traffic." AT&T also states (page 17): "... while the LECs will continue to earn a reasonable profit given that unit costs decline with growth in traffic volumes."
8. However, switching costs do vary with call attempts and minutes of use (i.e., traffic).
9. In order to evaluate alternate cost recovery mechanisms and rate structures, it is important to understand the nature of local switching costs. For clarity, we will define three useful cost terms: volume sensitive, service-specific fixed (volume insensitive), and shared costs. A volume sensitive cost is one that is caused by increases or decreases in the volume of a service. The measure of volume could be minutes, messages, lines, or trunk ports. Indeed, each of these measures of volume will have some associated costs that are caused by increases (or avoided with decreases) in volume. In addition, there may be some costs that are caused by the existence of a service in total, but which do not vary with the volume of the service. Service specific advertising, some product management costs, and some right-to-use fees fall in this category. Finally, shared costs are not caused by any unit of volume,

nor are they caused by the existence of any particular service in its entirety. Rather, shared costs are caused by groups of services or the existence of the firm in total (e.g., tax preparation costs).

10. The graphic below illustrates the relationship between these cost concepts. "Service" could be a retail service or a wholesale unbundled network element. The graphic below also shows two types of shared costs (those shared between a family of services and those shared by the firm).

Summary of the Economic Cost Relationships

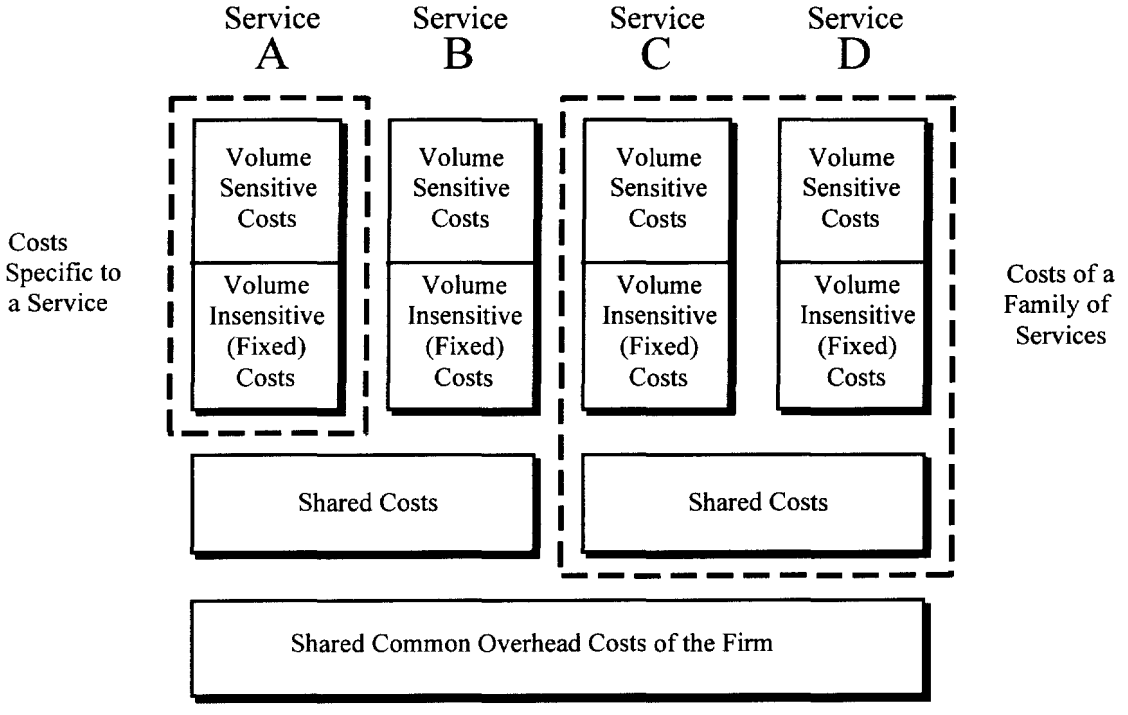

11. Often, a service (or a network element) is provided, in whole or in part, through the use of a piece of equipment that can provide many units of service, or even many units of different services. Certainly, the equipment has a capital cost that includes the cost of money, depreciation and taxes. If the equipment is physically "shared" by multiple units of the same service one may be inclined to categorize these equipment capital costs as volume insensitive (fixed) costs. If the equipment is physically

"shared" by multiple services, one may be inclined to categorize the equipment capital costs as volume insensitive shared costs.

12. However, the physical sharing of the equipment does not necessarily cause the costs of the equipment to be shared, or even to be volume insensitive (fixed). Under typical conditions the cost of the use of a portion of the capacity of a piece of equipment can be unambiguously applied to the unit of service that uses that portion of the capacity. This "capacity cost" technique is routinely applied to telecommunications cost estimates and is embodied in telecommunications models.[1] Capacity cost techniques applied to telecommunications are discussed in papers by J.J. Lee and V. Schmid-Bielenberg, and Richard Emmerson.[2]

13. Virtually any piece of equipment has a limited capacity, offering a finite number of seats (airplanes, theaters, buses), rooms (hotels), kilowatt hours (electric power generators), channels, lines, hundred call seconds (CCS), CPU or other dimension of capacity. In general, capacity does not expand slowly and continuously. Rather, capacity expands only through purchasing additional pieces of equipment, i.e., by providing additional discrete "lumps" of capacity. "Lumpiness" in capacity adds complexity to cost analysis but it does not cause capital costs to necessarily be fixed or shared.

14. The critical issue in properly evaluating the costs of using a shared facility (one that provides multiple units, often of multiple services) is whether the capacity of the facility will exhaust. If the existence of an additional unit of service advances the time at which the facility will exhaust, then that unit of service has caused the costs due to the more rapid deployment of capacity.[3] The unit using the portion of capacity causes an increase in the present value of the stream of costs since capital costs are

---

[1] See, e.g., Viktor Schmid-Bielenberg, "Bellcore's Switching Cost Information System (SCIS) Cost Model: A practical Approach to a Complex Problem."

[2] J.J. Lee and V. Schmid-Bielenberg, "Capacity Cost: A Practical Substitute for Marginal Costs with Mathematical Proofs," Bellcore Technical Memorandum (TM-BDS-017476), Nov. 1990; J.J. Lee and V. Schmid-Bielenberg, "Marginal Cost and Capacity Cost," and Richard Emmerson, "Theoretical Foundation of Network Costs," Oct. 1990.

[3] The additional unit may cause congestion costs related to the use of a facility that is nearing its practical capacity. This may be true even if capacity is never reached.

incurred sooner, rather than later. When a unit of service contributes to the exhaust of a facility, it is responsible for the capital costs of the share of the capacity that it uses.[4]

15. Therefore, in assessing local switching costs, it is appropriate to determine the type of capacity that will exhaust and units of service that cause it to exhaust. Some types of equipment exhaust with additional lines; this includes line cards and line units (e.g., a bay with a physical capacity of 512 line cards). Other types of equipment (e.g., trunk side bays) will exhaust with additional trunks. Still other types of equipment will exhaust with additional minutes of use or call attempts. The following graphic demonstrates the basic components of a switch and their associated limiting capacities.

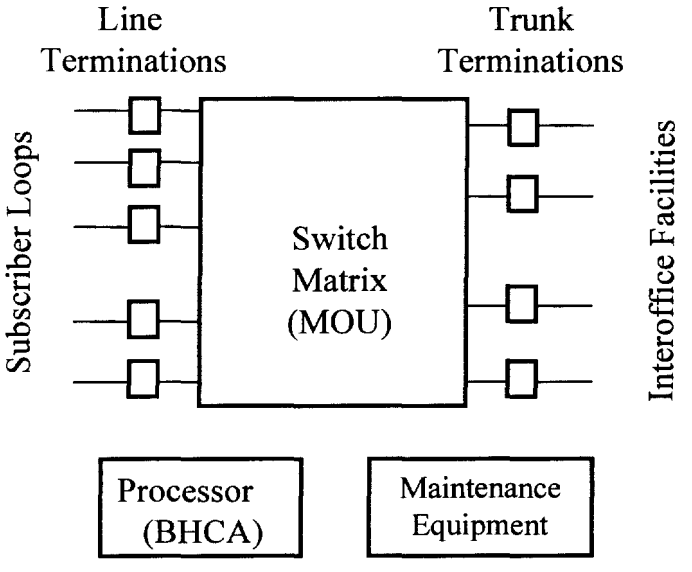

16. The major switching component that exhausts with call attempts is the central processor unit. Any switch is engineered to provide a maximum number of Busy

[4] This mathematical result requires that the unit of service contributes to the advanced exhaust of all future facilities. This elegantly simple result is proven mathematically in J.J. Lee and V. Schmid-Bielenberg, "Capacity Cost: A Practical Substitute for Marginal Costs with Mathematical Proofs," Bellcore Technical Memorandum (TM-BDS-017476), Nov. 1990. While the simple capacity cost calculation requires more broad ranging assumptions, there is a capital cost associated with a unit which advances the exhaust of <u>any</u> facility in the future; however, the calculation of the precise cost is much more difficult.

Hour Call Attempts (BHCA). When that volume is exceeded calls will be blocked,[5] and if the call attempt limit is exceeded the capacity of the processor must be modified or expanded. This expansion in capacity has an associated capital cost.

17. The major switching component that exhausts with minutes of use is the switching matrix[6]. Any switch is engineered to provide a maximum CCS (hundred call seconds). When that volume is exceeded calls will be blocked,[7] and when the CCS is exceeded too often, the capacity of the matrix must be modified or expanded. This expansion in capacity has an associated capital cost.

18. Trunk interfaces can also exhaust from an increase in traffic demand. The method of trunk group engineering is based on traffic patterns and the use of Erlang B and/or Poisson tables to determine the appropriate number of trunks in a switch. Since the aggregate number of trunk terminations is based on the traffic demand, cost models (e.g., SCIS) produce a traffic sensitive trunk investment (cost per trunk CCS). When traffic volumes exceed the threshold of a trunk group or a switch, traffic can sometimes be re-routed to accommodate short-term spikes in traffic. However, when traffic continues to exceed the traffic capacity of the trunks additional trunks are required and they have an associated capital cost. (Note, the cost of a trunk termination is also readily identifiable using long run incremental costing techniques and the same models also produce non-traffic sensitive investments for dedicated trunks.)

19. Capacity cost concepts are widely used in telecommunications cost analysis. Capacity cost-like approaches appear to be used in each of the cost proxy models considered by the FCC and state regulators in universal service proceedings. For example, in feeder and distribution cable, the cost proxy models explicitly or implicitly assign a portion of the cost of the cable to individual lines.[8] In this case the

---

[5] This represents congestion costs.

[6] Switch matrix refers to the equipment within the switching machine that provides the connections for calls to reach their destination, i.e., switching traffic from line to line or line to trunk. This equipment may include time slot interchanger units, port group highways and switch controllers that organize the call information into time slots and find available channels for calls to be carried through the switch.

[7] This represents congestion costs.

[8] The cost proxy models have generally employed techniques that reflect expected actual fill

cable is physically shared by multiple units of service, and by multiple services (e.g., business basic local exchange service, residential basic local exchange service, and private line). However, a portion of the cost of the cable is properly considered to be a cost of each line served, since each line uses a measurable portion of the capacity of the cable.

20. The cost proxy models also appear to use capacity cost-like approaches in estimating the switching costs associated with universal service and the switching UNE. Switching costs are derived in part based upon the minutes of local calling expected. Obviously, the approach employed by these models is not consistent with assuming that local switching costs are shared costs or with abandoning per minute charges for local calling.

21. Many cost models, including those that have withstood regulatory scrutiny, incorporate a traffic sensitive switching component. A switching cost per minute result is produced by the Benchmark Cost Proxy Model, the Cost Proxy Model (California), GTE's ICM, Telcordia's Switching Cost Information System (SCIS), the HAI model, USWest's Switching Cost Model (SCM), and the FCC's own Hybrid Cost Proxy Model (HCPM). According to Strategic Policy Research's 1996 econometric study,[9] "No NTS costs are associated with tandem switches"[10] and "Loops and DEMs cause investment in loops, interoffice facilities, and switching. These, in turn, generate the need for support investment."[11] A switching cost per minute is also consistent with our own switching cost modeling efforts.

22. To assume that the processor of the local switch does not exhaust is not consistent with state regulators' and the FCC's use of the traditional concept of a long-run incremental cost. For example, in its local competition order, the Commission defined "the term 'long run,' in the context of 'long run incremental cost,' refers to a

---

levels which may not correspond to usable capacity. The key point is that these models do not consider that the costs of physically shared facilities are necessarily shared costs.

[9] Strategic Policy Research, "A New Set of 'Top-Down' Incremental Cost Measures," November 17, 1996.

[10] Id, page 23.

[11] Id, page 11.

period long enough so that all of a firm's costs become variable or avoidable."[12] This sentence cites professor William Baumol in this regard.[13] To assume that the capacity of the processor in a local switch does not exhaust, is equivalent to assuming that the cost of the processor is sunk; this is inconsistent with most interpretations of long-run forward-looking incremental costs, including those of state regulators and the Commission.

23. State regulators have recognized that switching costs are traffic sensitive. Switching costs per minute have been considered by many (if not all states). We are not aware of any state jurisdiction that has ruled that there are no traffic sensitive switching costs or that there should be no traffic sensitive switching rate. AT&T notes with regard to UNEs, for example, (October 29 Comments, page ii) that: "... nearly all state commissions have implemented UNE rate structures that consist of line port, trunk port and minutes-of-use rates – essentially the same as the FCC's structure for interstate rates."

24. In conclusion, local switching costs do vary with minutes and call attempts (i.e., traffic). Further, the finding that switching costs are traffic sensitive is consistent with the concept of long-run forward-looking economic costs, standard incremental cost calculations in the industry, generally accepted cost-causation principles embodied in the capacity cost approach, past regulatory decisions regarding long-run cost concepts, state commission actions, and cost proxy model methods and results.

---

[12] In re Implementation of the Local Competition Provision in the Telecommunications Act (FCC 96-325, released August 8, 1996), ¶ 677.

[13] William Baumol, *Economic Theory and Operations Analysis* 290 (4th ed. 1977) ("The very long run is a period so long that all of the firm's present contracts will have run out, its present plant and equipment will have been worn out or rendered obsolete and will therefore need replacement, etc.").