4.4.4. Summary

Within Region 1, the IBOC signal covers a huge area with no lapses in digital coverage; the audio is completely free of degradation that typically plagues existing analog service. Even in unimpaired conditions, the digital audio quality is superior to analog audio quality.

Within Region 2, the USADR blend function exploits the availability of both the analog and digital portions of the hybrid signal. The receiver outputs unimpaired digital audio, and seamlessly blends to analog when the digital audio is sufficiently impaired. This maximizes the quality of the audio beyond that of existing analog service.

Within Region 3, the USADR IBOC signal exhibits graceful degradation. When the digital signal deteriorates and the receiver blends to analog, the performance of the USADR IBOC signal mirrors that of existing analog service, without subjecting the listener to muting and annoying digital artifacts.

The results of the Digital Coverage field test have confirmed the findings of extensive simulations and laboratory performance tests: the audio quality of the USADR IBOC digital signal is superior to analog audio quality, and the digital coverage is comparable to that provided by existing analog service.

5. First adjacent Compatibility Test

5.1. Overview

This test demonstrates that a hybrid IBOC signal does not interfere with its nearest analog first adjacent channels. WPOC transmitted the hybrid IBOC signal, and WMMR and WFLS served as the analog first adjacent channels. In these tests, audio was recorded from WFLS or WMMR while the DAB portion of the hybrid signal was toggled on and off over a five-minute interval. This interval was chosen to allow evaluation of audio quality with and without DAB over a variety of programming content.

During the testing the following information was stored:

- Video from the spectrum analyzer
- Audio from the analog home HiFi and car stereo

5.2. Test Point Locations

Using ComStudy 2.2 coverage prediction software, a map was created that shows the 74 dBu, 54 dBu, and 40 dBu contours of WPOC, and the 54 dBu and 40 dBu contours of WMMR and WFLS.[10] Test points were chosen at the points on the 54 dBu and 40 dBu

[10] The contours were computed using the Bullington field strength prediction technique, which is the basis for most FCC models. The denoted signal strengths are exceeded in 50 percent of the locations for 50 percent of the time. USADR chose the Bullington model since its predictions are generally regarded as optimistic. Therefore, test results are conservative, since the measurement sites are closer to the interfering hybrid signal; the D/U for a given location is worst case.

contours of the analog first adjacent channels where the hybrid IBOC signal was believed to be strongest. Figure H-9 identifies these test points.

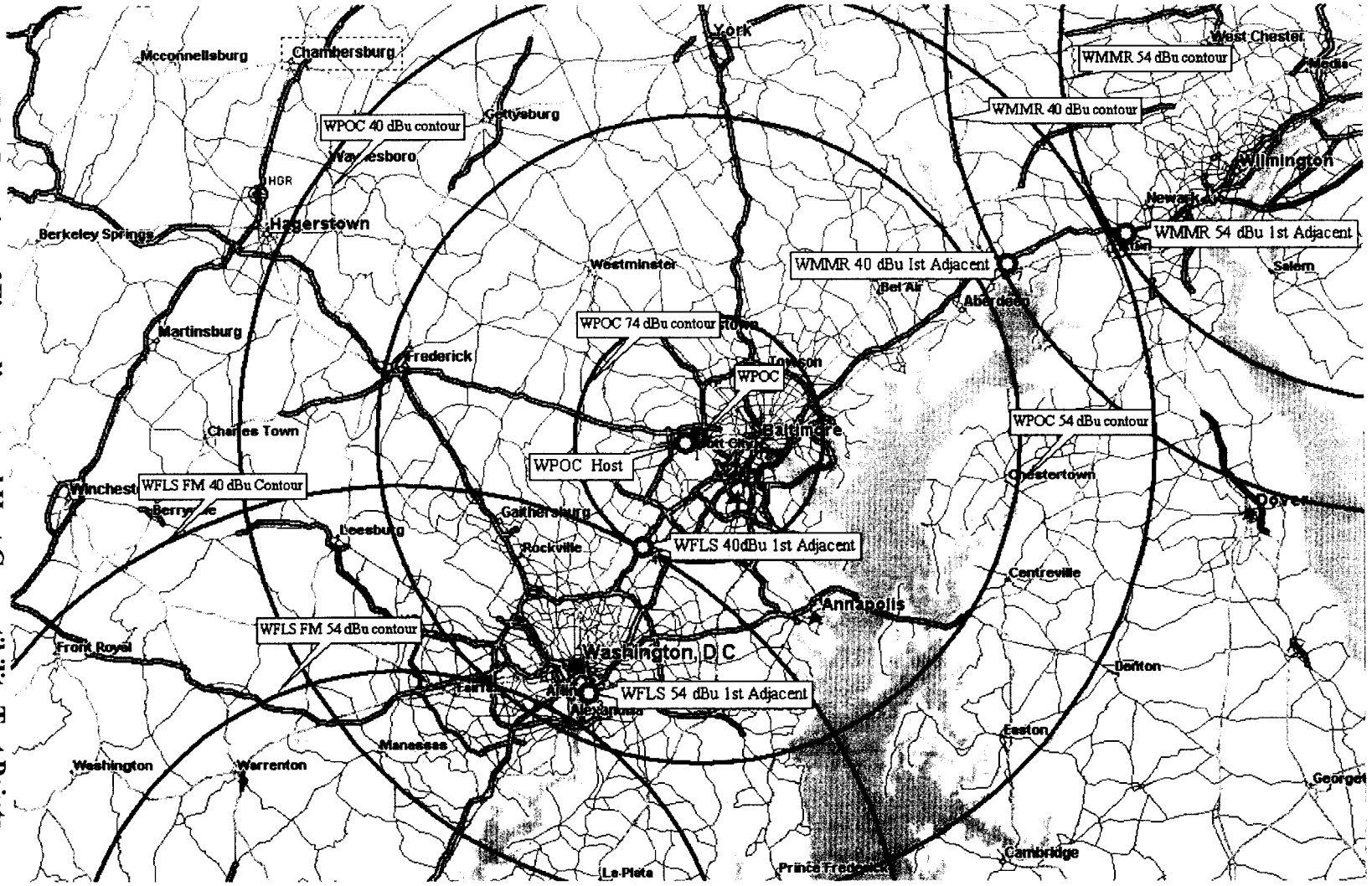

Figure H-9 – Location of First adjacent and Host Compatibility Test Points

5.3. Test Procedure

a) Drive to the selected test location and tune the analog receivers to the desired operating frequency. Load the recording media into the Digital Audio Recorder, set the analog audio levels, and label the audio recording cut. Place a tape into the VCR and setup to record.
b) All notes, tapes, and data should have the same time reference, which is derived from the GPS. Be sure all clocks are synchronized.
c) Simultaneously begin recording on the VCR and Digital Audio Recorder (for all analog receivers).
d) Coordinate with the transmitter site to begin the following five-minute test sequence:

i. 00:00 DAB carriers ON for 15 seconds
ii. 00:15 DAB carriers OFF for 15 seconds
iii. 00:30 DAB carriers ON for 15 seconds
iv. 00:45 DAB carriers OFF for 15 seconds
v. 01:00 DAB carriers ON for 30 seconds
vi. 01:30 DAB carriers OFF for 30 seconds
vii. 02:00 DAB carriers ON for 30 seconds
viii. 02:30 DAB carriers OFF for 30 seconds
ix. 03:00 DAB carriers ON for 1 minute
x. 04:00 DAB carriers OFF for 1 minute

e) Upon completion of the recording remove the recording media.
f) Repeat steps a) through e) for each test location.

5.4. Test Results

IBOC first adjacent compatibility may best be illustrated by analyzing the audio files recorded at each of the test points in Figure H-9. The test locations, filenames, and predicted D/U ratios are listed in Table H-3.

The recorded audio of each analog receiver allows the listener to assess changes in audio quality caused by the addition or removal of DAB sidebands from the interfering IBOC station (WPOC).

Test Point	Location	Audio File Names	Predicted D/U(dB)
WMMR 40 dBu 1st Adj	Rt 95 and 275	Delco_WMMR40 Yamaha_WMMR40	-14
WMMR 54 dBu 1st Adj	Rt 279 and Belle Hill Rd.	Delco_WMMR54 Yamaha_WMMR54	+14
WFLS 40 dBu 1st Adj	Rt 95 and 198	Delco_WFLS40 Yamaha_WFLS40	-34
WFLS 54 dBu 1st Adj	Bowling AFB	Delco_WFLS54 Yamaha_WFLS54	0

Table H-3 – First Adjacent Compatibility Test Point Matrix

5.4.1. Analysis of Audio Performance at Test Points

5.4.1.1. WMMR Results

On both receivers, at both the 40 dBu and 54 dBu contours of WMMR, there was no perceptible difference in the recorded audio upon addition or removal of DAB sidebands from WPOC. Therefore, the addition of DAB sidebands to the first adjacent analog signal did not introduce audible degradation at this point.

5.4.1.2. WFLS Results

On both receivers, at the 54 dBu contour of WFLS, there is no perceptible difference in the recorded audio upon addition or removal of DAB sidebands from WPOC. At the 40 dBu contour of WFLS, the Delco receiver does not exhibit audible degradation due to the addition of DAB sidebands to WPOC. The Yamaha receiver does exhibit audible degradation at this point. This is immaterial, however, since both receivers are already well beyond the point of failure at this location before the introduction of DAB sidebands to WPOC.

5.4.2. Summary

This test indicates that the addition of DAB sidebands to a first adjacent interferer will not degrade the audio quality of the desired analog signal within its listenable coverage area. This conclusion, based on measured field data, corroborates the laboratory compatibility test results detailed in Appendix F, which found that the introduction of DAB sidebands to a large first adjacent interferer should be inaudible.

Note that, since the introduction of IBOC DAB to WPOC in August 1999, neither USADR nor WPOC has received any listener complaints.

6. Host Compatibility Test

6.1. Overview

This test demonstrates that the DAB portion of the hybrid IBOC signal does not interfere with its analog host. In this test, analog audio was recorded from WPOC while the DAB portion of its hybrid signal was toggled on and off over a five-minute interval. This interval was chosen to allow evaluation of audio quality with and without DAB over a variety of programming content.

During the testing, the following information was stored:

- Video from the spectrum analyzer
- Audio from the analog home HiFi, car stereo, and boombox receivers

6.2. Test Point Location

A point between one and two miles from the test transmit site was selected. This distance assures that the effects of the DAB sidebands can be accurately evaluated, without being masked by noise and interference. Figure H-9 shows the location of the selected test point.

6.3. Test Procedure

a) Drive to the selected test location and tune the analog receivers to the desired operating frequency. Load the recording media into the Digital Audio Recorder, set the analog audio levels, and label the audio recording cut. Place a tape into the VCR and setup to record.

b) All notes, tapes, and data should have the same time reference, which is derived from the GPS. Be sure all clocks are synchronized.

c) Simultaneously begin recording on the VCR and Digital Audio Recorder (for all analog receivers).

d) Coordinate with the transmitter site to begin the following five-minute test sequence:

i. 00:00 DAB carriers ON for 15 seconds
ii. 00:15 DAB carriers OFF for 15 seconds
iii. 00:30 DAB carriers ON for 15 seconds
iv. 00:45 DAB carriers OFF for 15 seconds
v. 01:00 DAB carriers ON for 30 seconds
vi. 01:30 DAB carriers OFF for 30 seconds
vii. 02:00 DAB carriers ON for 30 seconds
viii. 02:30 DAB carriers OFF for 30 seconds
ix. 03:00 DAB carriers ON for 1 minute
x. 04:00 DAB carriers OFF for 1 minute

e) Upon completion of the recording remove the recording media.

6.4. Test Results

IBOC host compatibility may best be illustrated by analyzing the audio files recorded at the test point shown in Figure H-9. The test location and associated filenames are listed in Table H-4.

The recorded audio of each analog receiver allows the listener to assess changes in audio quality caused by the addition or removal of DAB sidebands from the host station (WPOC).

Test Point	Location	Audio File Names
WPOC Host	Patapsco State Park	Delco_WPOC Philips_WPOC Yamaha_WPOC

Table H-4 – Host Compatibility Test Point Matrix

6.4.1. Analysis of Audio Performance at Test Point

On all three receivers, there was no perceptible difference in the recorded audio upon addition or removal of DAB sidebands from WPOC. Since the addition of DAB was not audible in such a clean, high-signal, interference-free environment, it will certainly not degrade the host signal in most listening environments. This conclusion, based on measured field data, corroborates the laboratory compatibility test results detailed in Appendix F, which also found that the introduction of baseline DAB had no audible effect on the analog host.

Note that, since the introduction of IBOC DAB to WPOC in August 1999, neither USADR nor WPOC has received any listener complaints.

7. Field Test Summary

These field test results have demonstrated the superior performance of the USADR FM hybrid IBOC DAB system in a real-world environment, and have validated the results of extensive simulations and laboratory performance tests. The Digital Coverage test illustrated that the DAB audio quality exceeded that of an existing analog FM signal, and showed that IBOC DAB offers coverage comparable to existing analog service. The First Adjacent Compatibility test verified that the DAB signal does not interfere with the reception of its first adjacent analog FM neighbors. The Host Compatibility test showed that the digital portion of the hybrid IBOC DAB signal does not interfere with its analog host.

Over the past three years, USADR has performed detailed analyses, run exhaustive simulations, implemented its IBOC design in receivers and exciters, verified the simulations and analyses in laboratory tests, and validated all results through real-world field testing. The collective evidence from all of these sources mutually confirms the fact that the USADR FM IBOC DAB system performs as designed, offering an excellent path for broadcasters and

listeners into the future of radio – a digital future that is secured by the superior performance of the USADR IBOC system.

Appendix I

Appendix I

AM Hybrid IBOC DAB System Description

Digital communication systems operating in a band-limited noisy channel must be designed to balance the conflicting requirements of high data throughput and high data reliability. For AM IBOC DAB, this amounts to a compromise between coverage area and audio quality. The AM IBOC DAB channel is statistically characterized with unique interference scenarios that are exploited in the design to maximize performance in most environments. USADR has designed an AM IBOC DAB system that provides significantly improved audio quality compared to analog AM broadcasting while maintaining sufficient coverage areas.

The USADR AM IBOC DAB system is comprised of four basic components: the codec, which encodes and decodes the audio signal; FEC coding and interleaving which provides robustness through redundancy and diversity; the modem, which modulates and demodulates the signal; and blending, which provides a smooth transition from the digital to analog signal.

1. Codec

CD digital audio has a data rate of 1.4112 Mbps (44,100 16-bit samples per second, for left and right channels). The AM channel bandwidth does not have the capacity to support this data rate. As a result, an audio codec (coder-decoder) is employed. An audio codec is a source-encoding device that removes the parts of the signal that are irrelevant to the auditory system, i.e. to the ear. The signal coded in this way will not be identical to the original when decoded but will be perceptually equivalent given a high enough bit-rate.

USADR uses the MPEG AAC codec in its AM IBOC DAB system. AAC delivers high quality FM like stereo audio within the bandwidth constrains of the AM channel. To further enhance the robustness of the digital audio beyond that provided by FEC and interleaving, special error concealment techniques are employed by AAC to mask the effects of errors in the input bit-stream.

Furthermore, the MPEG AAC format provides the broadcaster the flexibility of providing data services if the program material warrants using lower audio encoding rates.

2. FEC Coding and Interleaving

Forward error correction and interleaving in the transmission system greatly improve the reliability of the transmitted information by carefully adding redundant information that is used by the receiver to correct errors occurring in the transmission path. Advanced FEC coding techniques have been specifically designed based on detailed interference studies to exploit the non-uniform nature of the interference in the

AM band. Also, special interleaving techniques have been designed to spread burst errors over time and frequency to assist the FEC decoder in its decision-making process.

A major problem in the AM band is the existence of Grounded Conductive Structures that can cause rapid changes in amplitude and phase that are not uniformly distributed across the digital carriers. To correct for this USADR has designed equalization techniques to insure that the phase and amplitude of the digital carriers are sufficiently maintained to ensure proper recovery of the digital information. The combination of advanced FEC coding, channel equalization , and optimal interleaving techniques allows the AM IBOC DAB system to deliver reliable reception of digital audio in a mobile environment.

3. Modulation Techniques

USADR evaluated several modulation techniques for the IBOC DAB AM system before selecting Quadrature Amplitude Modulation (QAM). QAM has a bandwidth efficiency that is sufficient for transmission of "FM-like" stereo audio quality as well as providing adequate coverage areas in the available bandwidth.

USADR reviewed whether to use a multi-carrier or single carrier approach to transmit the digital signal and chose a multi-carrier approach called Orthogonal Frequency Division Multiplexing (OFDM). OFDM is a scheme in which many QAM carriers can be frequency-division multiplexed in an orthogonal fashion such that there is no interference amongst the carriers. When combined with FEC coding and interleaving, the digital signal's robustness is further enhanced. The OFDM structure naturally supports FEC coding techniques that maximize performance in the non-uniform interference environment.

4. Blend

The USADR system employs time diversity between two independent transmissions of the same audio source to provide robust reception during outages typical of a mobile environment. The AM IBOC DAB system provides this capability by delaying a backup analog transmission by a fixed time offset (several seconds) relative to the digital audio transmission. This delay proves useful for the implementation of a blend function. During tuning, blend allows transition from the instantly acquired analog signal to the digital signal when it has been acquired. Once acquired, blend allows transition to the analog signal where the digital signal is corrupted. When a digital signal outage occurs, the receiver blends seamlessly to the backup analog audio that, by virtue of its time diversity with the digital signal, does not experience the same outage.

Digital systems depend on an interleaver to spread errors across time and reduce outages. Generally longer interleavers provide greater robustness at the expense of acquisition time. The blend feature provides a means of quickly acquiring the analog signal upon tuning or re-acquisition without compromising digital performance for rapid digital acquisition.

5. Hybrid Mode

The U.S. AM band allocation plan assigns stations 20 kHz of total bandwidth, with stations interleavered at 10 kHz spacings. The AM hybrid spectrum is shown in Figure I-1. The hybrid AM IBOC DAB signal is comprised of the ±4.5 kHz analog AM signal and digital carriers distributed across the 20 kHz bandwidth. The digital carriers under the analog signal are in quadrature and set at a level that is sufficient to insure reliable digital service and low enough to avoid objectionable interference to the host broadcast.

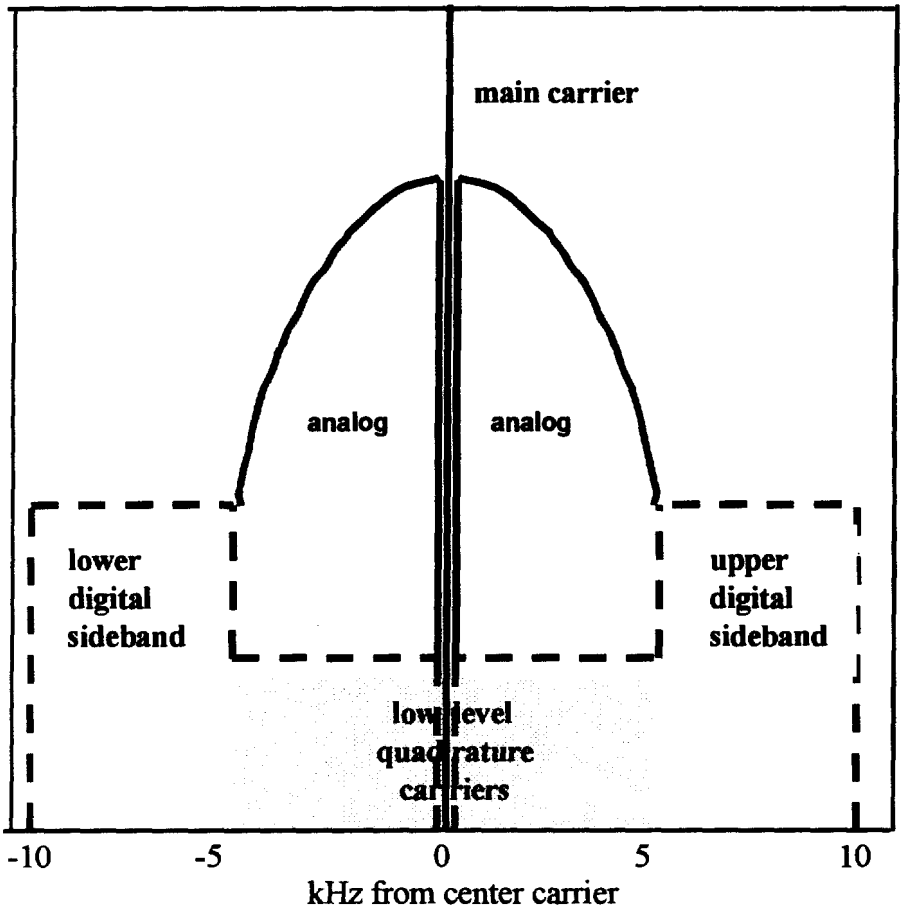

Figure I-1 – Hybrid AM IBOC Power Spectral Density

6. Generation of the Signal

A functional block diagram of the hybrid AM IBOC transmitter is shown in Figure I-2. The input audio source on the Studio Transmitter Link ("STL") feeds an L + R monaural[1] signal to the analog AM path and a stereo audio signal to the DAB audio. The DAB path digitally compresses the audio signal in the audio encoder (encoder) with the resulting bit stream delivered to the FEC encoder and interleaver. The bit stream is then combined into a modem frame and OFDM modulated to produce a DAB baseband signal. Diversity delay is introduced in the analog AM path and passed through the station's existing analog audio processor and returned to the DAB exciter where it is summed with the digital carriers. This baseband signal is converted to magnitude ρ and phase ϕ for amplification in the station's existing analog transmitter.[2]

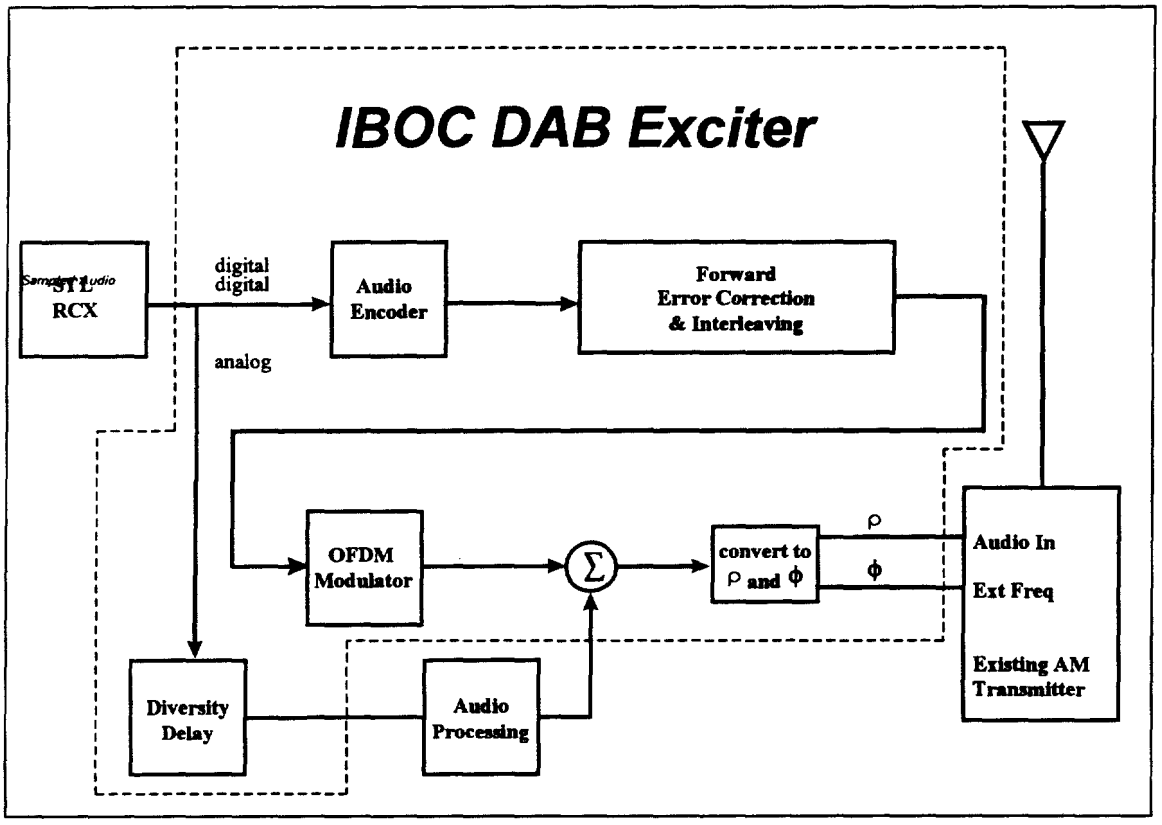

Figure I-2 – Hybrid AM IBOC Transmitter Block Diagram

[1] IBOC DAB cannot be transmitted simultaneously with AM stereo as both systems use the quadrature relationship with the analog signal. However, the loss of the stereo signal by the very few stations currently employing stereo in the AM band is more than offset by access to the higher audio quality digital signal.

Several solid state transmitters have been shown to have frequency response, distortion, and noise parameters that are sufficient to reproduce an IBOC hybrid waveform. USADR has many hours of on-air experience using a current production amplitude modulated transmitter for IBOC DAB transmission.

7. Reception of the Signal

A functional block diagram of an AM IBOC receiver is presented in Figure I-3. The signal is received by a conventional RF front end and converted to IF, in a manner similar to existing analog receivers. Unlike typical analog receivers, however, the signal is filtered, A/D converted at IF, and digitally down converted to baseband in-phase and quadrature signal components. The hybrid signal is then split into analog and DAB components. The analog component is then demodulated to produce a digitally sampled audio signal. The DAB signal is synchronized and demodulated into symbols. These symbols are deframed for subsequent deinterleaving and FEC decoding. The resulting bit stream is processed by the audio decoder to produce the digital stereo DAB output. This DAB audio signal is delayed by the same amount of time as the analog signal was delayed at the transmitter. The audio blend function blends the digital signal to the analog signal if the digital signal is corrupted and is also used to quickly acquire the signal during tuning or reacquisition.

Noise blanking is an integral part of the IBOC receiver and is used to improve digital and analog reception. Receivers use tuned circuits to filter out adjacent channels and intermodulation products. These tuned circuits tend to "ring", or stretch out short pulses into longer interruptions. A noise blanker senses the impulse and turns off the RF stages for the short duration of the pulse, effectively limiting the effects on the analog "listenability," of ringing. Short pulses have a minimal effect on the digital data stream and increases "listenability of the analog signal."[3]

---

[2] Details such as data insertion and synchronization have been omitted here for simplicity.

[3] The data paths and the noise blanker circuit are not shown for simplicity.

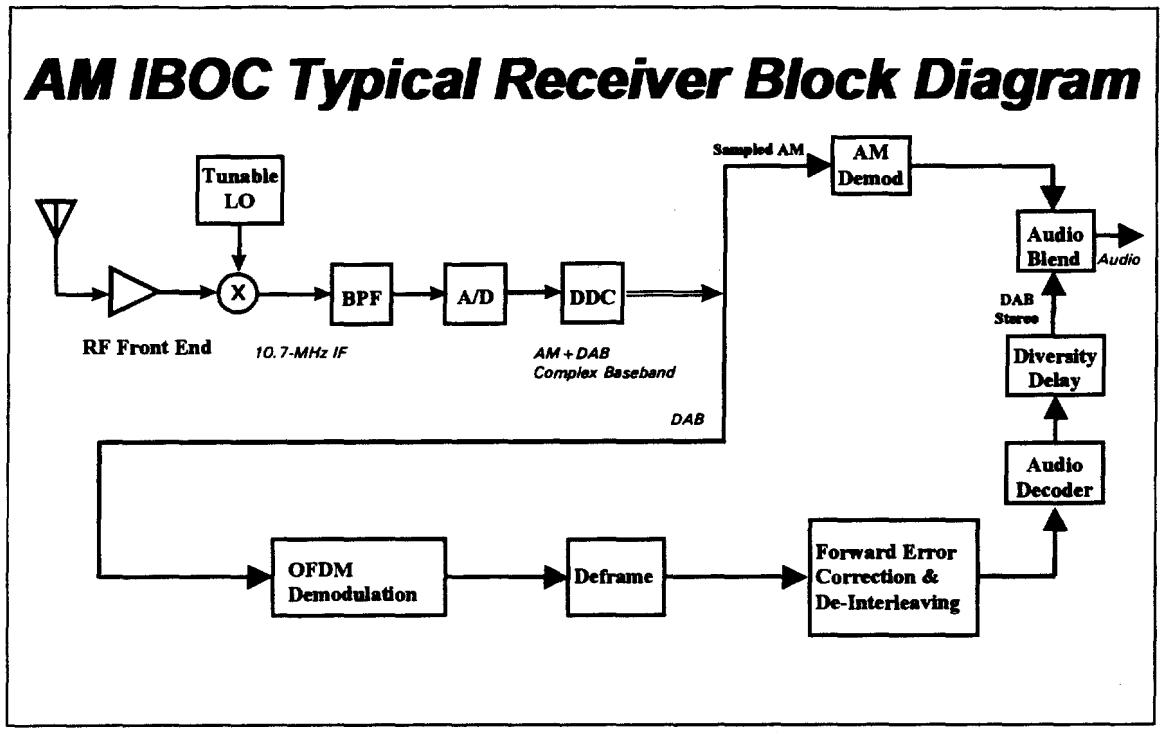

Figure I-3 - AM IBOC Typical Receiver Block Diagram

Appendix J

Appendix J

AM Hybrid IBOC DAB Simulations

1. Introduction

The goals of the AM simulation effort are threefold:

- Develop a realistic test bed to design and refine various algorithms within the system.
- To exercise the system design for a wide array of operating scenarios such that expected system performance can be predicted.
- Provide test results for lab verification of firmware implementations in a real–time system.

To meet the above goals, USADR and Xetron Corporation have jointly developed a computer simulation to model the operation of USADR's AM IBOC system. The simulation was written such that system parameters can be easily changed to allow rapid trade-off studies. The simulation includes all functions except the audio encoding algorithm and allows modeling of a number of different phenomenon such as a clock difference between an exciter and receiver, carrier frequency and phase offset, asymmetrical analog modulation, various vehicle speeds, interfering stations, channel impairments, and a number of other phenomenon found in real-world systems.

This appendix is organized as follows. The baseline simulation testing parameters are presented in Section 2. In Section 3, simulation results are compared to a case that can be analyzed theoretically. This provides a degree of verification of the simulation software. Section 4 presents results showing the expected performance of the AM IBOC DAB system under a number of different operating conditions.

2. Simulation Parameters

The simulation parameter values shown in Table J-1 were used as the default values for all simulations unless otherwise noted.

Table J-1 Standard simulation parameter values.

Parameter	Value	Reason for Selection
Analog Modulation Scaling	1	Sets analog modulation to +100% and –99%
Analog & Digital Modulation peak maximum % clip	140%	Typical hardware limit.
Additive White Gaussian Noise (AWGN) level	Off	AWGN interference tested separately
Carrier Frequency Offset	0 Hz	Frequency offset is modeled as an oscillator slip at the receiver
Carrier Phase Offset	0 degrees	Ideal selection
Oscillator Difference at Rx	0 ppm	Ideal selection
AM analog signal	Pulsed USASI Noise	Models current programming
Adjacent Station Interference Levels	-50 dB	Levels increased for testing in specific interference scenarios

3. Calibration

In order to verify that the simulations were working properly, the pre-decoding bit error rates in a purely Additive White Gaussian Noise (AWGN) environment were determined and compared with theoretical calculations.

A comparison of the simulation results with theoretical results is shown in Figure J-1. From these results it can be seen that the simulation closely matches theoretical results. The slight degradation from the theoretical results can be attributed to receiver functions such as AGC and carrier tracking that are realistically modeled in the simulation but are assumed ideal in the theoretical model.

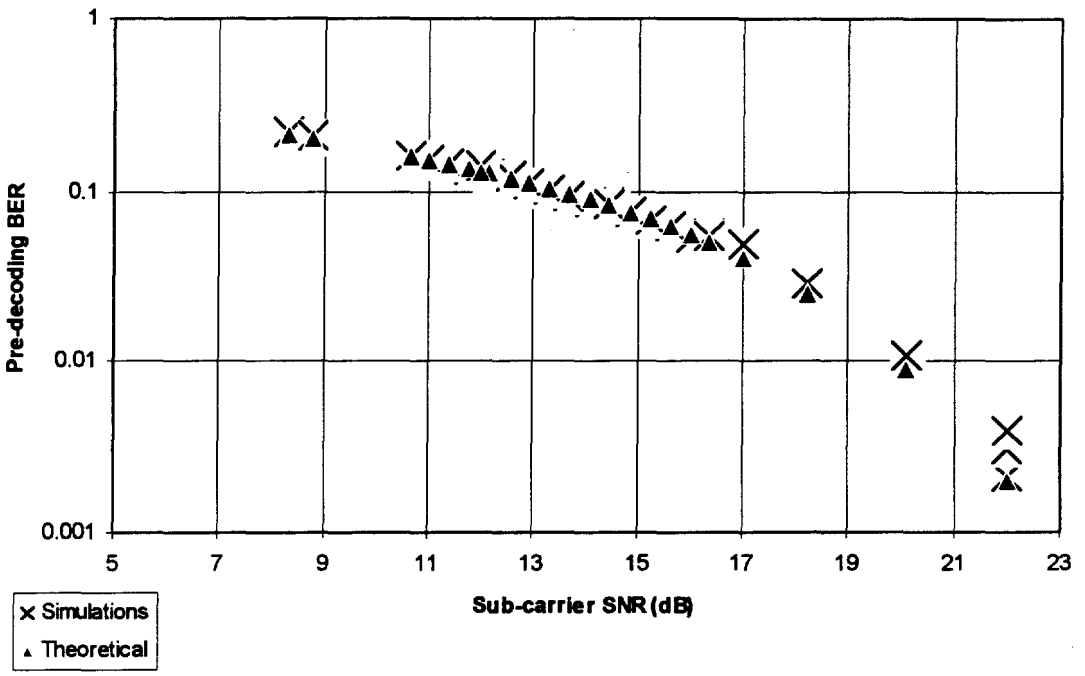

Figure J-1 Comparison Between Simulation and Theoretical Pre-decoding BER Results in an AWGN Channel

4. Simulation Tests

The purpose of these tests is to determine when Threshold of Audibility (TOA) occurs under a variety of different interference conditions. USADR has empirically determined that an audio block error rate of 0.01 or 1% is a good measure of TOA for the AM IBOC DAB system. This is the point where current error concealment techniques begin to break down, and a blend to analog will occur.

The operating conditions presented in this section are:

- System performance in (previously defined) AWGN
- System performance in the presence of interferers
- System performance in the presence of channel impairments

4.1. AWGN

The tests in this section analyze system performance in an AWGN environment.

4.1.1. Description of Tests

In all cases, the level of the AWGN interference is raised, in 2 dB increments, until the TOA is reached. The level of the noise is defined as the Carrier-to-Noise Ratio (CNR) in a 1 Hz bandwidth.

4.1.2. Results

The results of these tests are shown in Table J-2 below.

Table J-2 Performance of AM IBOC hybrid DAB System in the presence of AWGN

C/No(dB/Hz)	Block Error Rate
72.6	0.0%
70.6	2.21%
68.6	67.3%

4.2. First Adjacents

The tests in this section determine system performance in the presence of first adjacent interferers. The tests determine the levels of simultaneous lower and upper first adjacent interferers that can be tolerated before the TOA is reached. The interfering signals are hybrid IBOC DAB signals.

4.2.1. Description of Tests

In all cases, the level of the inteferers was raised until the TOA was reached. The levels of the interferers are reported as the ratio of the interfering carrier level to the desired carrier level in dB.

4.2.2. Results

Figure J-2 shows the simulation results. Any combination of upper and lower first adjacent levels that fall below or to the left of the TOA curve will receive digital audio. Any interference scenarios that fall above or to the right of the TOA curve will blend to analog audio.

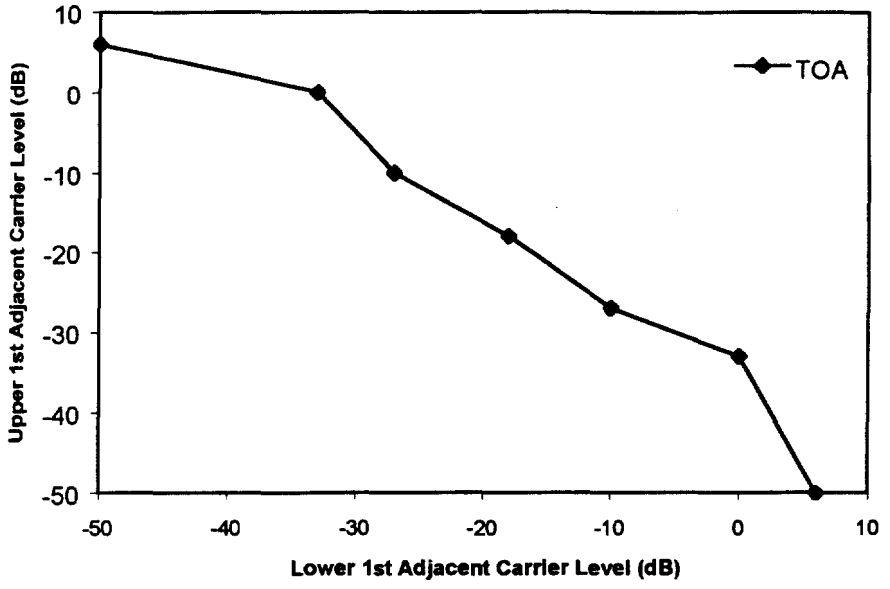

Figure J-2 USADR AM IBOC DAB System performance in the presence of first adjacent interferers.

4.3. Co-Channel and a First Adjacent

These tests are identical with those in the previous section, except that one of the first adjacent interferers was replaced with a co-channel interferer. All interferers are hybrid IBOC DAB signals.

4.3.1. Description of Tests

In all cases, the level of the interferers was raised until the TOA was reached. The levels of the interferers are reported as the ratio of the interfering carrier level to the desired carrier level in dB.

4.3.2. Results

Figure J-3 shows the simulation results. Any interference scenario that falls below or to the left of the TOA curve will receive digital audio. Any interference scenarios that fall above or to the right of the TOA curve will blend to analog audio.

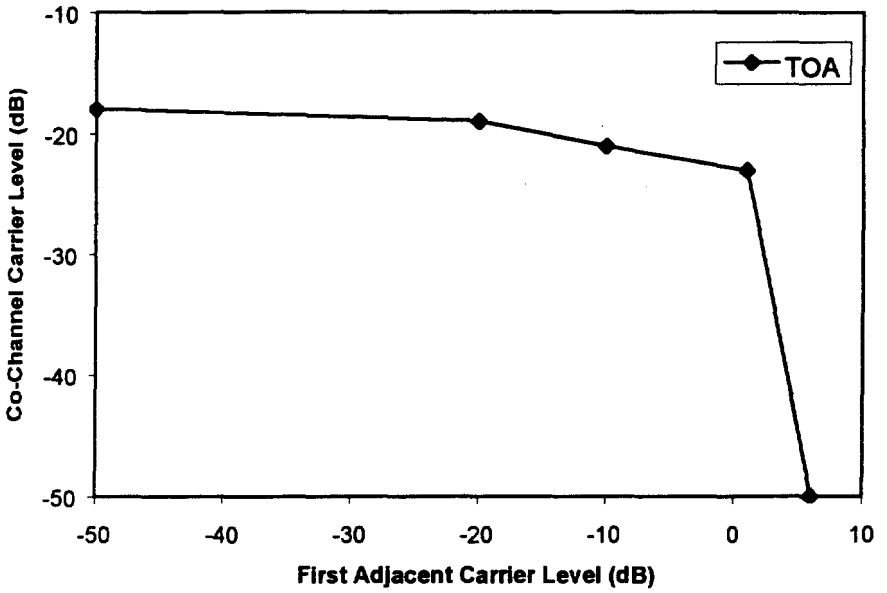

Figure J-3 USADR AM IBOC DAB system performance in the presence of co-channel and first adjacent interferers.

4.4. Grounded Conductive Structures

A study was performed to characterize wave propagation impairments in the AM channel. AM broadcasting is limited to 510-1710 kHz. Therefore, unlike higher frequency channels, traditional multipath is rarely seen in the AM channel because large structures are required to reflect an incident wave. However, certain structures such as bridges and power lines can cause the magnitude and phase of the incident wave to change. The goal of the study was not to determine the physical mechanism causing these channel perturbations, but rather to measure and characterize the magnitude and phase changes caused by the impairments in order to minimize such effects in the system.

Measurements were taken using center frequencies of 740 kHz and 1660 kHz in Cincinnati and 1150 kHz in Boston. The choice of these frequencies was sufficient to obtain measurements at the low, middle, and high sections of the AM band. For each center frequency used, measurements were taken in a variety of locations including urban, suburban, and rural.

The measured data from this study has been incorporated directly into the AM simulation. In this way, the transmitted waveform can be corrupted in ways identical to what is seen in the field.

4.4.1. Description of Tests

A total of 24 channel impairment files were selected for analysis. Approximately 8 impairments were selected from each of the center frequencies noted above. The

specific channel impairments were selected as a representative cross section of the various types of impairments, fading depths, and frequency selectivity. Each of the 24 impairment files were run for vehicle speeds of 25 and 70 MPH resulting in a total of 48 simulations. Since the channel impairments vary in duration, block error rate is not a valid indicator of system performance in the presence of impairments. Therefore, for each of the 48 simulations it was noted if post-FEC decoding errors resulted.

4.4.2. Results

The simulation results for channel impairments are shown in Table J-3 below. An X indicates that no post-FEC errors resulted. Even for cases where post-FEC errors were obtained, blending to analog would not be required if codec error concealment techniques can be used to mitigate the errors.

Table J-3 Performance of USADR AM IBOC system in the presence of channel impairments

Number	Description	25 MPH	70 MPH
1	Freq selective	X	
2	Typical flat fade	X	X
3	Freq. Selective		
4	Shallow hole in mag.	X	X
5	Freq selective	X	X
6	Three fades	X	X
7	Two sharp fades		
8	Fade freq selective slightly		X
9	Three fades	X	X
10	Many fades		
11	Freq selective in phase	X	X
12	Dip on center	X	X
13	Two close fades	X	X
14	Three fades	X	
15	4 repeated fades	X	X
16	Freq selective	X	X
17	Long fade		
18	Sharp fade	X	X
19	Fades in phase	X	X
20	Long fade	X	
21	Two long fades		
22	1 flat, 1 freq selective	X	X
23	Freq selective "Y plot"		
24	Fades of –155 to –80 dB		X

5. Summary and Conclusions

USADR has developed an extensive simulation of all aspects of the AM IBOC DAB system including the transmitter, receiver, and channel. USADR has used this simulation to develop an AM IBOC DAB system that will provide the performance necessary to deliver FM-like digital audio and robust coverage.

This appendix has presented performance results from the simulation effort. The results include performance in the presence of AWGN and interferers and performance in the presence of channel impairments. The AWGN results matched a theoretical analysis, providing a degree of verification for the simulation. The interferer tests showed that the system could survive even in the presence of strong first adjacent and co-channel interferers. The channel impairment tests showed that the system is robust against channel impairments that typically plague the AM band.

Appendix K