A

V. Ordering and Provisioning Test Section

A. Overview

The purpose of this section is to define the specific order and provisioning tests to be undertaken in evaluating the systems and related operational elements associated with BellSouth's establishment and maintenance of business with CLECs.

B. Scope

The ordering and provisioning test scope is defined by the following test dimensions: interface, test objective, product category, and test technique. The table identifies the test target, the interface under test, the primary test objective(s), the BST product offering, and the test technique(s) to be employed.

Test Cycle	*Test Dimensions*			
	Interface	*Primary Test Objective*	*Product Category*	*Test Technique*
O&P-1: EDI Functional Test	EDI	Functionality	UNE	Transaction Processing
O&P-2: TAG Functional Test	TAG	Functionality	UNE	Transaction Processing
O&P-3: EDI/TAG Normal Volume Performance Test	EDI TAG	Volume & Performance	Resale UNE	Transaction Processing
O&P-4: EDI/TAG Peak Volume Performance Test	EDI TAG	Volume & Performance	Resale UNE	Transaction Processing
O&P-5: Provisioning Verification Test	TAG	Performance	UNE	Transaction Processing Inspection
O&P-6: Order~~ing~~ Processing Systems Capacity Management Evaluation	EDI, TAG, LEO, LESOG, LNP, SOCS	~~Volume &~~ Processing Capacity	Resale UNE	Inspection Interview
O&P-7: O&P Performance Results Comparison	EDI TAG	Performance	Resale UNE	Performance Comparison

O&P-8: EDI Documentation Evaluation	EDI	Documentation	Resale UNE	Document Review Interview
O&P-9: TAG Documentation Evaluation	TAG	Documentation	Resale UNE	Document Review Observation
O&P-10: EDI/TAG Production Volume Performance Test	EDI TAG	Volume & Performance	Resale UNE	Transaction Processing

Figure V-I: Ordering and Provisioning Test Cycles

C. Test Cycles

1.0 O&P-1: EDI Functional Test

1.1 Description

The EDI Functional Test will evaluate the functional elements of the ordering and provisioning process for UNEs as delivered to CLECs by the EDI interface. This test cycle will be executed by submitting local service requests (LSRs) for UNEs against BellSouth test-bed accounts and allowing the process to continue through the return of either a firm order confirmation (FOC) or reject/error notice. A number of these transactions will be permitted to proceed through the physical provisioning process and the return of an electronic completion notice (CN). This test cycle will address all electronically ordered UNE requisition type and activity type combinations for business and residence customers. Other functional elements of the UNE ordering and provisioning process to be tested include flow-through and non-flow-through orders, full and partial migrations, error conditions, order supplements, directory listings, cancels, dispatch and non-dispatch provisioning, expedites, service order status inquiries, and jeopardy notices delivered through the EDI interface.

Orders will be submitted as both stand alone transactions and as integrated pre-order /order transactions. For a defined set of integrated transactions, information returned on the pre-order response will be used to populate fields on subsequent orders. This activity is undertaken to simulate the system-related activities of a CLEC wishing to integrate the pre-order and order functions.

Additionally in preparation for the volume test, a limited number of resale scenarios will be tested to evaluate the functional elements of the ordering and provisioning process for resale orders as delivered to CLECs by the EDI interface. This test cycle will be executed by submitting local service requests (LSRs) for resale orders against BellSouth test-bed accounts and allowing the process to continue through the return of either a firm order confirmation (FOC) or reject/error notice. A number of these transactions will be

permitted to proceed through the physical provisioning process and the return of an electronic completion notice (CN).

The EDI ordering and provisioning test will require BellSouth to establish a test bed of customer accounts against which to place the requisite service requests. Customer test accounts will be distributed geographically across multiple Georgia COs and switching/transmission equipment configurations. Additionally, the downstream CRIS/CABS Invoicing Functional Test (BLG-1) requires that those transactions allowed to complete through provisioning utilize three operating company numbers (OCNs). The test scenarios to be used in the EDI Functional Test are described in **Appendix B-3: UNE Ordering Scenarios**.

Scenarios for ordering Local Number Portability (LNP) and for CLEC-to-CLEC migrations will be processed by the Test Manager using customer data and other requisite order data from CLECs currently doing business with BellSouth Georgia.

EDI ordering and provisioning functionality will be reviewed along with the documentation addressing its use. Documentation issues encountered during the creation of order transactions will be analyzed and reported in O&P-8: EDI Documentation review.

The Test Cycle Manager will coordinate efforts with BellSouth to ensure that BellSouth's and KPMG's performance measurement systems are prepared to track test transaction performance prior to beginning the test. Test cycle performance data will also be collected through test management tools and delivered to the O&P Performance Results Comparison Test (O&P-7).

1.2 Objective

The objective of the EDI Functional Test is to evaluate the existence of EDI functionality for electronically ordered UNEs in accordance with EDI documentation.

1.3 Entrance Criteria

- Global Entrance Criteria satisfied.
- EDI documentation and training materials obtained.
- Test transaction tracking strategy identified.
- Five OCNs acquired and deployed (three for provisioning).
- Target performance metrics identified.
- BellSouth's and KPMG's performance measurement tracking systems prepared to track test transactions.

- Transaction submission tools installed and configured.
- All appropriate SRT activities completed.
- BellSouth test-bed customer account data loaded.
- CLEC data for LNP orders obtained.
- Expected results files completed.
- Integrated test management tools installed and configured.
- Test scripts (transaction content) completed and loaded.
- Test case execution scheduled.
- Test cycle execution checklist created.
- Test logs created and results reporting template completed.
- Test execution team staffed, scheduled, and trained.
- Test Plan and evaluation criteria defined and approved.

1.4 Test Scope

The test scope will address the following sub-processes and functions to evaluate EDI functionality.

Test Objective: Functionality, Performance, Documentation, and Interface ***Test Technique: Transaction Processing***	
Sub-Process	***Function***
Submit an Order	Create order transaction(s).
	Submit integrated LSR.
	Receive acknowledgment.
	Receive FOC/error/reject notification.
	Send expedited order transaction.

Test Objective: Functionality, Performance, Documentation, and Interface ***Test Technique: Transaction Processing***	
Sub-Process	***Function***
Submit an Error	Create error transaction(s).
	Send error in LSR format.
	Receive acknowledgment.
	Receive planned error/reject notification.
	Correct error(s).
	Resend integrated LSR.
	Receive FOC.
Supplement an Order	Create supplement transaction(s).
	Send supplement.
	Receive acknowledgment.
	Receive FOC/error/reject notification.
	Correct error(s).
	Resend supplement.
	Receive FOC.
Pre-order/Order Integration	Populate integration orders with information returned from designated pre-order response.
	Submit integration orders.
	Receive acknowledgement.
	Receive error/reject notification.
	Correct errors.
	Resend integration order.
	Receive FOC.

Test Objective: Functionality, Performance, Documentation, and Interface *Test Technique: Transaction Processing*	
Sub-Process	***Function***
Receive Completion Notice (CN)	Receive CN transaction.
Receive Jeopardy Notification	Receive jeopardy notification transaction.
Check Service Order Status	Check service order status.

Figure V-II: EDI Functional Test Scope

1.5 Test Activities

1. Submit EDI test case transactions according to schedule.
2. Log transaction identifier(s) and submission date/time stamp.
3. Receive transaction responses.
4. Log transaction identifier(s) and receipt date/time stamp.
5. Format transaction response for comparator evaluation.
6. Match transaction response to submitted transaction.
7. Verify that transaction response contains expected results.
8. Flag any exceptions or mismatched responses and determine next steps in exception resolution process.
9. Log documentation issues uncovered during transactions creation and submission process.
10. Resubmit transactions as necessary.
11. Review comparator results and identify pending/open transactions.
12. Generate test results reports.
13. Calculate and report performance metrics.

1.6 Exit Criteria

- Global Exit Criteria satisfied.

- Exception resolution activities and reports are complete.
- Expected results versus actual test case results reported.
- Test report generated.
- Exit review completed.

2.0 O&P-2: TAG Functional Test

2.1 Description

The TAG Functional Test will evaluate the functional elements of the ordering and provisioning process for UNEs as delivered to CLECs via the TAG interface. This test cycle will be executed by submitting LSRs for UNEs against BellSouth test-bed accounts and allowing the process to continue through the return of either an FOC or reject/error notice. A number of these transactions will be permitted to proceed through the physical provisioning process and return an electronic CN.

This test cycle will address all electronically ordered UNE requisition type and activity type combinations for business and residence customers. Other functional elements of the UNE ordering and provisioning process to be tested include flow-through and non-flow-through orders, full and partial migrations, error conditions, order supplements, directory listings, cancels, dispatch and non-dispatch provisioning, expedites, service order status inquiries, and jeopardy notices delivered through the TAG interface.

Orders will be submitted as both stand alone transactions and as integrated pre-order /order transactions. For a defined set of integrated transactions, information returned on the pre-order response will be used to populate fields on subsequent orders. This activity is undertaken to simulate the system-related activities of a CLEC wishing to integrate the pre-order and order functions.Additionally, in preparation for the volume test, a limited number of resale scenarios will be tested to evaluate the functional elements of the ordering and provisioning process for resale orders as delivered to CLECs by the TAG interface. This test cycle will be executed by submitting LSRs for resale orders against BellSouth test-bed accounts and allowing the process to continue through the return of either a firm order confirmation (FOC) or reject/error notice. A number of these transactions will be permitted to proceed through the physical provisioning process and the return of an electronic completion notice (CN).

The TAG interface ordering and provisioning test will require BellSouth to establish a test bed of customer accounts against which to place the requisite service requests. Customer test accounts will be distributed geographically across multiple Georgia COs and switching/transmission equipment configurations. Additionally, the downstream CRIS/CABS Invoicing Functional Test (BLG-1) requires that those transactions allowed

to complete through provisioning utilize two OCNs. The test scenarios to be used in the TAG Functional Test are described in **Appendix B-3: UNE Ordering Scenarios**.

Scenarios for ordering Local Number Portability (LNP) and CLEC-to-CLEC migrations will be processed by the Test Manager using customer data and other requisite order data from CLECs currently doing business with BellSouth Georgia.

TAG ordering functionality will be reviewed along with the documentation addressing its use. Documentation issues encountered during the creation of order transactions will be analyzed and report in O&P-9: TAG Documentation Review.

The Test Cycle Manager will coordinate efforts with BellSouth to ensure that BellSouth's andKPMG's performance measurement systems are prepared to track test transaction performance prior to beginning the test. Test cycle performance data will be also be collected through test management tools and delivered to the O&P Performance Results Comparison Test (O&P-7).

2.2 Objective

The objective of the TAG Functional Test is to evaluate the functionality for electronically ordered UNEs in accordance with TAG documentation.

2.3 Entrance Criteria

- Global Entrance Criteria satisfied.
- TAG documentation and training materials obtained.
- Test transaction tracking strategy identified.
- Five OCNs acquired and deployed (three for provisioning).
- Target performance metrics identified.
- BellSouth's and KPMG's performance measurement tracking systems prepared to track test transactions.
- All appropriate SRT activities completed.
- Transaction submission tools installed and configured.
- BellSouth test-bed customer account data loaded.
- CLEC data for LNP orders obtained.
- Expected result files completed.

- Integrated test management tools installed and configured.
- Test scripts (transaction content) completed and loaded.
- Test case execution scheduled.
- Test cycle execution checklist created.
- Test logs created and results reporting templates completed.
- Test execution team staffed, scheduled, and trained.
- Test Plan and evaluation criteria defined and approved.

2.4 Test Scope

The test scope will address the following sub-processes and functions to evaluate TAG functionality.

Test Objective: Functionality, Performance, Documentation, and Interface ***Test Technique: Transaction Processing***	
Sub-Process	***Function***
Submit an Order	Create order transaction(s).
	Submit integrated LSR.
	Receive acknowledgment.
	Receive FOC/error/reject/notification.
	Send expedited order transaction.
Submit an Error	Create error transaction(s).
	Send error in LSR format.
	Receive acknowledgment.
	Receive planned error/reject notification.
	Correct error(s).

Test Objective: Functionality, Performance, Documentation, and Interface ***Test Technique: Transaction Processing***	
Sub-Process	***Function***
	Resend integrated LSR.
	Receive FOC.
Supplement an Order	Create supplement transaction(s).
	Send supplement.
	Receive acknowledgment.
	Receive FOC/error/reject notification.
	Correct error(s).
	Resend supplement.
	Receive FOC.
Pre-order/Order Integration	Populate integration orders with information returned from designated pre-order response.
	Submit integration orders.
	Receive acknowledgement.
	Receive error/reject notification.
	Correct errors.
	Resend integration order.
	Receive FOC.
Receive Completion Notice	Receive CN transaction.
Receive Jeopardy Notification	Receive jeopardy notification transaction.
Check Service Order Status	Create service order status request.
	Send transaction.
	Receive response.

Figure V-III: TAG Functional Test Scope

2.5 Test Activities

1. Submit TAG test case transactions according to schedule.
2. Log transaction identifier(s) and submission date/time stamp.
3. Receive transaction responses.
4. Log transaction identifier(s) and receipt date/time stamp.
5. Format transaction response for comparator evaluation.
6. Match transaction response to submitted transaction.
7. Verify that transaction response contains expected results.
8. Flag any exceptions or mismatched responses and determine next steps in exception resolution process.
9. Review comparator results and identify pending/open transactions.
10. Generate test results reports.
11. Calculate and report performance metrics.

2.6 Exit Criteria

- Global Exit Criteria satisfied.
- Exception resolution activities and reports are complete.
- Expected results versus actual test case results reported.
- Test report generated.
- Exit review completed.

3.0 O&P-3: EDI/TAG Normal Volume Performance Test

3.1 Description

The EDI/TAG Normal Volume Performance Test will evaluate simultaneously the behavior and performance of both the EDI and TAG interfaces under "normal" YE01 projected transaction load conditions. This test cycle will be executed by TTGs in a manner consistent with the forecasted daily usage patterns and transaction mix (including error conditions) for each interface. The TTGs are capable of submitting large volumes of flow-through pre-ordering (TAG only), and resale and UNE service request test cases. Patterns of time within the day and patterns of days within the month will be emulated.

The normal volume forecast will be developed across BellSouth's entire nine-state region as described in **Appendix C: Volume Analysis**. The test will be executed during two ten-hour periods by modeling the expected normal daily usage pattern (*e.g.*, the off-peak nighttime hour loads will be ignored for the test). The majority of the transactions submitted in support of this test cycle are expected to flow through BellSouth's OSS electronically and return an error or an FOC. However, a representative sample of transactions will be submitted to test BellSouth's processing capacity for electronically ordered service requests and errors that fall out for manual processing. LSR transaction loads will be distributed geographically across multiple Georgia COs. BellSouth will ensure that customer test accounts are established and configured accordingly.

The test scenarios to be used in the EDI/TAG Normal Volume Performance Test are described in **Appendix B-2: Resale Ordering Scenarios** and **Appendix B-3: UNE Ordering Scenarios**.

TAG and EDI volume tests will be conducted in parallel, using a forecasted order split of 60% - 40% respectively. The PRE-4: TAG Pre Ordering Normal Volume Test will also be conducted in parallel. The Test Cycle Manager will coordinate efforts with BellSouth to ensure that BellSouth's and KPMG's performance measurement systems are prepared to track test transaction performance prior to beginning the test. Test cycle performance data will also be collected through test management tools and delivered to the O&P Performance Results Comparison Test (O&P-7) and KPMG as inputs to their respective test execution functions.

3.2 Objective

The objective of the EDI/TAG Normal Volume Performance Test is to measure the performance of the EDI and TAG interface under normal projected YE01 transaction loads.

3.3 Entrance Criteria

- Global Entrance Criteria satisfied.
- EDI and TAG documentation obtained.
- O&P-1: EDI Functional Test and O&P-2: TAG Functional Test successfully completed.
- Test transaction tracking strategy identified.
- Normal volume level defined.
- BellSouth's and KPMG's performance measurement tracking systems prepared to track transactions.

- Certification testing for TTGs completed.
- Test scenarios selected (refer to **Appendix B-2 & Appendix B-3**).
- Test cases selected.
- BellSouth test bed customer account data loaded.
- Expected result files completed.
- Integrated test management tools installed and configured.
- Test scripts (transaction content) completed and loaded.
- Test case execution scheduled.
- Test cycle execution checklist created.
- Test logs created and results reporting template completed.
- Account and security access to EDI and TAG established.
- EDI and TAG connectivity established.
- Test execution team staffed, scheduled, and trained.
- Test Plan and evaluation criteria defined and approved.

3.4 Test Scope

The test scope will address the following sub-processes and functions to evaluate EDI and TAG performance under YE01 normal projected transaction loads.

Test Objective: Volume & Scalability, Performance, and Interface ***Test Technique: Transaction Processing***	
Sub-Process	***Function***
Submit Orders in Projected Normal Volumes	Create order transaction(s).
	Send order in LSR format.

Test Objective: Volume & Scalability, Performance, and Interface *Test Technique: Transaction Processing*	
Sub-Process	***Function***
	Receive acknowledgment.
	Receive FOC or error/reject notification.
	Send transaction response.

Figure V-IV: EDI/TAG Normal Volume Performance Test Scope

3.5 Test Activities

1. Submit EDI/TAG test case transactions according to schedule.
2. Log transaction identifier(s) and submission date/time stamp.
3. Receive transaction responses.
4. Log transaction identifier(s) and receipt date/time stamp.
5. Verify that transaction response contains expected results.
6. Analyze timeliness performance
7. Flag any exceptions or mismatched responses and determine next steps in exception process
8. Generate test results reports.

3.6 Exit Criteria

- Global Exit Criteria satisfied.
- Exception resolution activities and reports are complete.
- Expected results versus actual test case results reported.
- Test report generated.
- Exit review completed.

4.0 O&P-4: EDI/TAG Peak Volume Performance Test

4.1 Description

The EDI/TAG Peak Volume Performance Test will evaluate the behavior and performance of both the EDI and TAG interfaces under "peak" YE01 projected transaction load conditions simultaneously. This test cycle will execute selected flow-through pre-ordering (TAG only) resale and UNE service request test cases, including error conditions. The PRE-5: TAG Pre Ordering Peak Volume Test will be conducted in parallel with this test.

The peak volume forecast will be developed using the peak hourly load identified for the EDI/TAG Normal Volume Performance Test, replicating those transaction volumes across an eight-hour period. Alternatively, if BellSouth's normal daily usage patterns are relatively flat, a multiple may be applied to the peak hourly load and the result replicated across an eight-hour day. The methodology and calculations are discussed further in **Appendix C: Volume Analysis**.

The peak volume test will be executed during two eight-hour periods. LSR loads will again be distributed geographically across multiple Georgia COs to more accurately reflect a realistic peak load operating environment. BellSouth will ensure that customer test accounts are established and configured accordingly.

The test scenarios to be used in the EDI/TAG Peak Volume Performance Test are described in **Appendix B-2: Resale Ordering Scenarios** and **Appendix B-3: UNE Ordering Scenarios**.

The Test Cycle Manager will coordinate efforts with BellSouth to ensure that BellSouth's and KPMG's performance measurement systems are prepared to track test transaction performance prior to beginning the test. Test cycle performance data will also be collected through test management tools and delivered to the O&P Performance Results Comparison Test (O&P-7) and KPMG as inputs to their respective test execution functions.

4.2 Objective

The objective of the EDI/TAG Peak Volume Performance Test is to measure the performance of the EDI and TAG interfaces under peak projected YE01 transaction loads.

4.3 Entrance Criteria

- Global Entrance Criteria satisfied.
- EDI and TAG documentation obtained.

- O&P3 EDI/TAG Normal Volume Performance Test completed.
- Test transaction tracking strategy identified.
- Peak volume level defined.
- BellSouth's and KPMG's performance measurement tracking systems prepared to track transactions.
- Test scenarios selected (refer to **Appendix B-2 & Appendix B-3**).
- Test cases selected.
- BellSouth test bed customer account data loaded.
- Expected results files completed.
- Integrated test management tools installed and configured.
- Test scripts (transaction content) completed and loaded.
- Test case execution scheduled.
- Test cycle execution checklist created.
- Test logs created and results reporting template completed.
- Account and security access to EDI and TAG established.
- EDI and TAG connectivity established.
- Test execution team staffed, scheduled, and trained.
- Test Plan and evaluation criteria defined and approved.

4.4 Test Scope

The test scope will address the following sub-processes and functions to evaluate EDI/TAG peak performance.

Test Objective: Volume & Scalability, Performance, and Interface *Test Technique: Transaction Processing*	
Sub-Process	***Function***
Submit Orders in Projected Peak Volumes	Create order transaction(s).
	Send order in LSR format.
	Receive acknowledgment.
	Receive FOC or error/rejection notification.
	Send transaction response.

Figure V-V: EDI/TAG Peak Volume Performance Test Scope

4.5 Test Activities

1. Submit EDI/TAG test case transactions according to schedule.
2. Log transaction identifier(s) and submission date/time stamp.
3. Receive transaction responses.
4. Log transaction identifier(s) and receipt date/time stamp.
5. Analyze timeliness performance.
6. Flag any exceptions or mismatched responses and determine next steps in exception process.
7. Generate test results reports.

4.6 Exit Criteria

- Global Exit Criteria satisfied.
- Exception resolution activities and reports are complete.
- Expected results versus actual test case results reported.

- Test report generated.
- Exit review completed.

5.0 O&P-5: Provisioning Verification Test

5.1 Description

The Provisioning Verification Test will evaluate BellSouth's ability to accurately and expeditiously complete the provisioning of service requests placed in both the O&P-1: EDI Functional Test and O&P-2: TAG Functional Test. This analysis will focus on electronically ordered UNEs and involves the physical inspection of BellSouth's provisioning process. Real CLEC provisioning activities will be observed to test end-to-end provisioning process on UNE – Loop orders. In addition, to test the full functionality of BellSouth's provisioning process, orders will be supplemented and canceled, require outside dispatch, and address customer coordination.

The test scenarios to be used in the Provisioning Verification Test are described in **Appendix B-3: UNE Ordering Scenarios**.

Test cycle performance data will be collected by an on-site observer and those results will be delivered to the O&P Performance Results Comparison Test (O&P-7) as inputs to test execution functions.

5.2 Objective

The objective of the Provisioning Evaluation Test is to evaluate BellSouth's performance in the provisioning of UNEs as described in the Georgia Order.

5.3 Entrance Criteria

- Global Entrance Criteria satisfied.
- O&P-1, EDI Functional Test and O&P-2, TAG Functional Test successfully executed.
- LEO Implementation Guides (Volumes 1-4), Local Number Portability Ordering Guide, TAG API Programmers Guide, and Georgia SGAT obtained.
- Test transaction tracking strategy identified.
- BellSouth performance measurement tracking system prepared to track transactions.

- Three carrier OCNs obtained for provisioning.
- Test scenarios selected. (Refer to **Appendix B-3**).
- Test transaction tracking data elements identified.
- Expected result files completed.
- BellSouth test bed prepared and customer account data loaded.
- BellSouth test facilities available.
- Test management tools installed and fully configured.
- Test scripts (transaction content) completed and loaded.
- Test case execution scheduled.
- Detailed test cycle execution checklist created.
- Test logs created and results reporting templates completed.
- Test execution team identified, trained, and scheduled.
- Test Plan and evaluation criteria defined and approved.

5.4 Test Scope

The test scope will address the following sub-processes and functions to evaluate UNE provisioning.

Test Objective: Functionality and Performance ***Test Technique: Transaction Processing, Inspection***	
Sub-Process	***Function***
BellSouth Provisioned Service	Receive design documents.
	Establish provisioning date and time.
	Perform provisioning activities.
	Perform testing activities.

Test Objective: Functionality and Performance *Test Technique: Transaction Processing, Inspection*	
Sub-Process	***Function***
	Turn up service.

Figure V-VI: Provisioning Verification Test Scope

5.5 Test Activities

1. Analyze FOC for provisioning information.
2. Log all provisioning notifications.
3. Verify provisioning appointment date/time.
4. Meet BellSouth provisioners for appointment.
5. Log interactions in provisioning checklist.
6. Perform testing on provisioned services.
7. Log activity completion date/time for provisioning event.
8. Record results in appropriate provisioning log.
9. Flag any exceptions or mismatched responses and determine next steps in exception process..
10. Generate test results reports.

5.6 Exit Criteria

- Global Exit Criteria satisfied.
- Exception resolution activities and reports are complete.
- Expected results versus actual test case results reported.
- Test report generated.
- Exit review completed.

6.0 O&P-6: Order Processing Systems Capacity Management Evaluation

6.1 Description

The Oorder Pprocessing Ssystems Ceapacity Mmanagement Eevaluation is a detailed review of the safeguards and procedures in place to plan for and manage projected growth in the use of EDI, TAG, LEO, LESOG, LNP and SOCS [Oorder pProcessing Systems]. ~~interfaces.~~

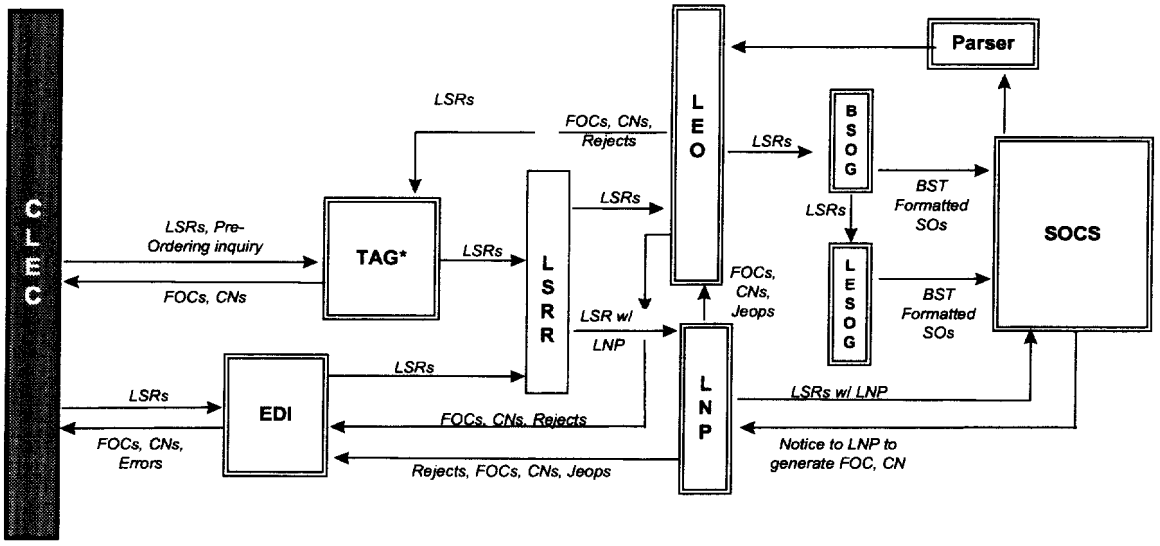

Figure VI-VII: BellSouth's Ordering Network Elements

6.2 Objective

The objective of ~~the Order Processing Systems Capacity Management~~this cEvaluation is to analyze the capabilities of BST capacity management functions in relation to the order processing applications ~~and associated workforce.~~ and determine whether the procedures are adequate to identify and implement capacity increments to satisfy projected customer business volumes on a timely basis.

6.3 Entrance Criteria

- Global Entrance Criteria satisfied.
- Availability of documentation identified as input.

- Interview guide / questionnaire developed.
- Interviewees identified and scheduled.
- Detailed evaluation checklists developed.
- ~~EDI/TAG t~~Technical documentation ~~must be~~ identified and obtained for Order Processing Systems.

~~Performance metrics defined and approved.~~

- Test Plan and evaluation criteria defined and approved.

6.4 Test Scope

The test scope will address the following sub-processes and functions to evaluate ~~EDI/TAG~~wholesale order processing capacity management.

Test Objective: Capacity Management ***Test Technique: Inspection and Interview***	
Sub-Process	***Function***
~~EDI/TAG~~Order Processing Systems ~~-~~Capacity Management	~~Evaluate business volume tracking and forecasting~~Data collection and reporting of business volumes, resource utilization, and performance monitoring
	~~Evaluate resource usage tracking and forecasting~~Data verification and analysis of business volumes, resource utilization, and performance monitoring
	~~Evaluate performance management processes~~
	~~Evaluate capacity management processes~~Systems and capacity planning

Figure V-VIII: Order Processing Systems Capacity Management Evaluation Test Scope

6.5 Test Activities

Interviews will be conducted with system administration personnel responsible for the operation of the Order Processing Systems. These interviews will be supplemented with an analysis of BellSouth capacity management procedures as

well as evidence of related activities such as: periodic capacity management reviews; system reconfiguration/load balancing; and load increase induced upgrades.

1. Review procedural and other documentation related to order processing systems capacity management.
2. Conduct interviews with the key systems administration and support personnel as appropriate.
3. Document findings.
4. Resolve exceptions.

6.6 Exit Criteria

- Global Exit Criteria satisfied.
- Documentation reviews complete.
- Interviews completed.
- Capacity management review report completed.
- Exit review completed.

7.0 O&P-7: O&P Performance Results Comparison

7.1 Description

The O&P Performance Results Comparison is a comparative analysis of O&P performance results collected by the KPMG test management tools and by BellSouth's OSS performance measurement system. The source results collected from O&P-1: EDI Functional Test, O&P-2: TAG Functional Test, O&P-3: EDI/TAG Normal Volume Performance Test, and O&P-4: EDI/TAG Peak Volume Performance Test will be compared to BellSouth's performance results; accuracy and trends will be identified; and disparities will be analyzed for significance.

7.2 Objective

The objective of the O&P Performance Results Comparison is to assess the accuracy of BellSouth's wholesale performance metrics results using test transactions.

7.3 Entrance Criteria

- Global Entrance Criteria satisfied.
- Results comparison strategy defined.
- EDI/TAG Functional Tests completed with disaggregated performance metrics reports (including raw data in electronic form).
- EDI/TAG Normal and Peak Volume Performance Tests completed with disaggregated performance metrics reports (including raw data in electronic form)
- BellSouth performance measurement system reports compiled.
- Test execution scheduled.
- Test logs created and results reporting template completed.
- Test execution team staffed, scheduled, and trained.
- Test Plan and evaluation criteria defined and approved.
- Guidelines for measuring variances defined.

7.4 Test Scope

The test scope will address the following sub-processes and functions to compare performance results.

Test Objective: Performance ***Test Technique: Performance Comparison***	
Sub-Process	***Function***
Percent Rejected Service Requests	Mechanized
Reject Interval	Mechanized
Firm Order Confirmation Timeliness	Mechanized
Percentage of Subsequent Reports	UNE Designed
	UNE Non-Designed

Test Objective: Performance *Test Technique: Performance Comparison*	
Sub-Process	***Function***
Average Completion Interval	UNE Dispatch
	UNE Non-Dispatch
Order Completion Interval Distribution	UNE Dispatch
	UNE Non-Dispatch
Held Order Interval Distribution and Mean Interval	UNE Dispatch
	UNE Non-Dispatch
Average Jeopardy Notice Interval	UNE Dispatch
	UNE Non-Dispatch
Percentage of Orders Given Jeopardy Notices	UNE Dispatch
	UNE Non-Dispatch
Percent Provisioning Troubles within 30 Days	UNE Dispatch
	UNE Non-Dispatch
Percent Service Order Accuracy	UNE Dispatch
	UNE Non-Dispatch
Average Completion Notice Interval	UNE Dispatch
	UNE Non-Dispatch

Figure V-IX: O&P Performance Results Comparison Test Scope

7.5 Test Activities

1. Acquire and format BellSouth and test management tools performance data files.

2. Compare disaggregated BellSouth performance results with test management tools performance results.
3. Flag any exceptions in results comparison and determine next steps in exception resolution process.
4. Generate comparative analysis results reports.

7.6 Exit Criteria

- Global Exit Criteria satisfied.
- Exception resolution activities and reports are complete.
- Expected results versus actual test case results reported.
- Test report generated.
- Exit review completed.

8.0 O&P-8: EDI Documentation Evaluation

8.1 Description

The EDI Documentation Evaluation is an analysis of the BellSouth-provided documentation used by CLECs to interface and interact with the EDI interface for ordering and provisioning activities. This evaluation is intended to review the availability, accuracy, and completeness of BellSouth's ordering and provisioning documentation using a variety of operational analysis techniques. This test will receive as input from the O&P-1: EDI Functional Test an exceptions report based on issues pertaining to documentation which addresses whether system functionality matches that described in the business rules documentation.

8.2 Objective

The objective of the EDI Documentation Evaluation is to assess whether the documentation provided by BellSouth adequately assists CLECs in understanding how to implement and use all of the EDI ordering and provisioning functions available to them.

8.3 Entrance Criteria

- Global Entrance Criteria satisfied.
- EDI documentation obtained.

- Teams staffed, scheduled and trained
- Documentation evaluation checklist completed.
- Test Plan and evaluation criteria defined and approved.
- Interview guide/questionnaire(s) completed.
- Incident report(s) arising from documentation issues from O&P-1:EDI Functional Test obtained.
- BST and CLEC documentation Order Specialist and User contact information provided.
- Process for logging exceptions defined and accepted.

8.4 Test Scope

The test scope will address the following sub-processes and functions to evaluate EDI documentation along with additional relevant documentation identified for use in Ordering and Provisioning.

Test Objective: Documentation ***Test Technique: Document Review and Interview***	
Sub-Process	***Function***
O&P Documentation	LEO Implementation Guides (Volumes 1-4).
	PC-EDI Training Document.
	Carrier Notifications off the BellSouth website.
	Resale CLEC Activation Requirements.
	Local Number Portability Ordering Guide.

Figure V-X: EDI Documentation Evaluation Test Scope

8.5 Test Activities

1. Obtain relevant documentation needed to carry out business processes related to O&P.

2. Conduct documentation evaluation using documentation evaluation checklist.
3. Conduct interviews with BellSouth documentation specialists.
4. Conduct interviews with CLEC documentation users.
5. Log incidents noted duringtesting.
6. Flag any exceptions and determine next steps in execution resolution process.
7. Compile results.

8.6 Exit Criteria

- Global Exit Criteria satisfied.
- Exception resolution activities and reports are complete.
- Expected results versus actual test case results reported.
- Test report generated.
- Exit review completed.

9.0 O&P-9: TAG Documentation Evaluation

9.1 Description

The TAG Documentation Evaluation is an analysis of the BellSouth-provided documentation used by CLECs to interface and interact with the TAG interface for ordering and provisioning activities. This evaluation is intended to review the availability, accuracy and completeness of BellSouth's ordering and provisioning documentation using a variety of operational analysis techniques. This test will receive as input from the O&P-2: TAG Functional Test an incident report due to issues pertaining to documentation which addresses whether system functionality matches that described in the business rules documentation.

9.2 Objective

The objective of TAG Documentation Evaluation is to assess whether the documentation provided by BellSouth adequately assists CLECs in understanding how to implement and use all of the TAG ordering and provisioning functions available to them.

9.3 Entrance Criteria

- Global Entrance Criteria satisfied.

- TAG documentation obtained.
- Teams staffed, scheduled, and trained.
- Documentation evaluation checklist completed.
- Test Plan and evaluation criteria defined and approved.
- Interview guide/questionnaire(s) completed for BST & CLEC.
- Exception report(s) arising from documentation issues from O&P-2 TAG Functional Test obtained.
- BST and CLEC documentation Order Specialist and User contact information provided.
- Process for logging exceptions defined and accepted.

9.4 Test Scope

The scope will address the following sub-processes and functions to evaluate TAG documentation along with additional relevant documentation identified for use in Ordering and Provisioning.

Test Objective: Documentation ***Test Technique: Document Review and Interview***	
Sub-Process	***Function***
O&P Documentation	LEO Implementation Guides (Volumes 1-4).
	TAG API Reference Guide.
	TAG Programmer's Job Aid.
	TAG Training for CLEC Programmer.
	Carrier Notifications off the BellSouth website.
	Resale CLEC Activation Requirements.
	Local Number Portability Ordering Guide.

Figure V-XI: TAG Documentation Evaluation Test Scope

9.5 Test Activities

1. Obtain relevant documentation needed to carry out business processes related to O&P.
2. Conduct documentation evaluation using documentation evaluation checklist
3. Conduct interviews with BellSouth documentation specialists
4. Conduct interviews with CLEC documentation users
5. Log incidents noted during testing.
6. Flag any exceptions and determine next steps in execution resolution process.
7. Compile results.

9.6 Exit Criteria

- Global Exit Criteria satisfied.
- Exception resolution activities and reports are complete.
- Expected results versus actual test case results reported.
- Test report generated.
- Exit review completed.

10.0 O&P-10~~9~~: EDI/TAG Production Volume Performance Test

10.1 Description

The EDI/TAG Production Volume Performance Test will evaluate simultaneously the behavior and performance of both the interfaces under current capacities of the production system. This test cycle will be executed by TTGs in a manner consistent with the forecasted daily usage patterns and transaction mix (excluding error conditions) for each interface. The TTGs are capable of submitting large volumes of flow through pre-orders (TAG only), and resale and UNE service request cases. The test will be executed during an eight-hour period. All the transactions submitted are expected to flow through BellSouth's OSS electronically and return an error or an FOC. LSR transaction loads will be distributed geographically across multiple Georgia COs. BellSouth will ensure that customer test accounts are established and configured accordingly.

The test scenarios to be used in the EDI/TAG Production Volume Performance Test are described in **Appendix B-2: Resale Ordering Scenarios** and **Appendix B-3: UNE Ordering Scenarios.**

The Test Manager will coordinate efforts with BellSouth to ensure that BellSouth's and KPMG's performance measurement system are prepared to track test transaction performance prior to beginning the test. Test cycle performance data will also be collected though test management tools and delivered to the O&P Performance Results Comparison Test (O&P-7).

10.2 Objective

The objective of the EDI/TAG Production Volume Performance Test is to measure the performance of the EDI and TAG interface under current production capacity at YE01 projected mix.

10.3 Entrance Criteria

- Global Entrance Criteria satisfied.
- EDI and TAG documentation obtained.
- O&P-1: EDI Functional Test, O&P-2: TAG Functional Test, O&P-3: EDI/TAG Normal Volume Performance Test and O&P – TAG/EDI Peak Volume Performance Test successfully completed.
- Test transaction tracking strategy identified.
- Current volume level defined.
- BellSouth's and KPMG's performance measurement tracking systems prepared to track transactions.
- Certification testing for TTGs completed.
- Test scenarios selected (refer to **Appendix B-2 &Appendix B-3**).
- Test cases selected.
- BellSouth test bed customer account data loaded.
- Expected result files completed.
- Integrated test management tools installed and configured.
- Test scripts (transaction content) completed and loaded.
- Test case execution scheduled.
- Test cycle execution checklist created.

- Test logs created and results reporting template completed.
- Account and security access to EDI and TAG established.
- EDI and TAG connectivity established.
- Test execution team staffed, scheduled, and trained.
- Test Plan and evaluation criteria defined and approved.

10.4 Test Scope

The test scope will address the following sub-processes and functions to evaluate EDI and TAG performance under current transaction loads.

Test Objective: Volume & Scalability, Performance, and Interface ***Test Technique: Transaction Processing***	
Sub-Process	***Function***
Submit Orders in Projected Normal Volumes	Create order transaction(s).
	Send order in LSR format.
	Receive acknowledgment.
	Receive FOC or error/reject notification.
	Send transaction response.

Figure V-IV: EDI/TAG Production Volume Performance Test Scope

10.5 Test Activities

1. Submit EDI/TAG test case transactions according to schedule.
2. Log transaction identifier(s) and submission date/time stamp.
3. Receive transaction responses.
4. Log transaction identifier(s) and critical performance responsiveness date/time stamp information.

5. Verify that transaction response contains expected results.
6. Flag any exceptions or mismatched responses and determine next steps in exception resolution process.
7. Generate test results reports.

10.6 Exit Criteria

- Global Exit Criteria satisfied.
- Exception resolution activities and reports are complete.
- Expected results versus actual test case results reported.
- Test report generated.
- Exit review completed.