D

APPENDIX D

LDR FM IBOC SYSTEM DESCRIPTION

Lucent Digital Radio, Inc.

20 Independence Blvd

Warren, NJ 07059, USA

Introduction

LDR's FM Hybrid system design is specifically optimized to provide CD like digital audio quality, data capabilities, robustness to channel impairments such as multi-path and maximum coverage under a variety of FM channel conditions. The all-digital system design, with higher throughput, achieves better audio quality and higher throughput for applications such as multi-channel audio or digital surround sound.

LDR's FM IBOC system is made of three basic components: The Multi-steaming PAC audio source coding, the modem (modulator and de-modulator), and signal enhancement module, and the channel coder for robustness to different types of impairments.

FM IBOC SYSTEM

The LDR IBOC signal is designed to provide present and future compatibility and seamless transition from the FM analog to FM Hybrid to the FM All-Digital modes and, at the same time, to deliver near-CD digital audio over a full range of adverse signal conditions.

FM Hybrid SYSTEM

Figure D-1 shows the FM Hybrid signal including analog host and the digital signal diagrams.

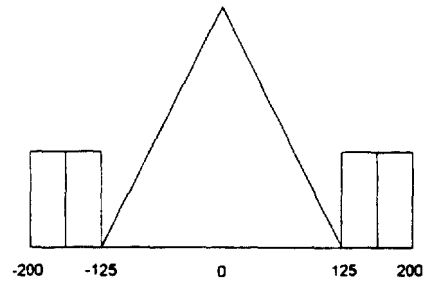

Fig.D-1 FM Hybrid Signal

The FM Hybrid signal is shown to have the four sub-bands that correspond to the four audio streams. The left band that occupies frequencies from –125kHz to –200kHz offset from the center of the channel includes two sub-bands corresponding to two of the four PAC streams. Similarly, the right band that occupies frequencies from +125 kHz to +200 kHz offset from the center of the channel includes two sub-bands corresponding to another two the four PAC streams. The modulated FM carrier is at the center of the channel and uses standard FM modulation.

FM Band All Digital system

Figure D-2 shows the all-digital FM IBOC signal. In it, the FM host carrier is replaced with a digital OFDM signal having four sub-bands that, in total, have 10dB lower power than the replaced host. These bands occupy the spectrum from –100 to +100 kHz. The low-level left and right sub-bands remain at the same level but now occupy –200 to –100 kHz and 100 to 200 kHz.

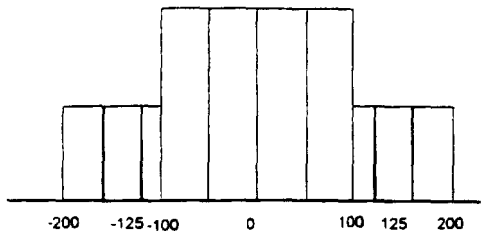

Figure D-2: FM All-Digital Signal

The throughput of the All-digital system is 300 Kbps in the center band, which complements the 128 Kbps available in the side bands. This clearly will support multi-channel surround sound (5.1 channel) which requires 280 Kbps. The additional power will extend the range of the digital signal to the very edge of the current listenable range of FM in a clean (unimpaired and interference free) channel. Although bit rate is the standard method to characterize throughput in digital communication, additional spectral efficiency is provided by the multi stream approach. To achieve robust performance under impairments, diversity is a must. The multi stream approach provides high audio quality with 128Kbps with inherent time diversity. The same audio quality in a single stream approach requires 96Kbps, to achieve time diversity an additional 96Kbps is required. Thus the multi stream approach is 50% more efficient than the single stream approach.

This FM All-digital design has the following salient characteristics:

1. High spectrum efficiency with greater throughput than the FM Hybrid system

2. Robust operation within the current protected contour and within the current FCC emission mask

3. Broadcaster freedom to transition to all digital system at any time

4. Range that goes out to the FM clean channel listenable range (-14 dBu contour)

5. Increased robustness to channel impairments

Multi-streaming PAC audio coding

The audio signal is first sampled at high speed and converted by a high-quality and high-resolution converter. Then, the sampled signal is processed and encoded in digital signal processors. LDR's Perceptual Audio Codec (PAC) is used to encode audio to reduce the data rate by at least 11 times from a standard CD source rate of 1.4 Mbps. The FM Hybrid implementation of the Multi-streaming PAC algorithm produces four information streams of 32 kbps for a total maximum audio rate of 128 Kbps. This patented concept, called Multi-streaming, uses both time and frequency diversity and thereby provides robustness to channel impairments. The FM implementation utilizes multi-descritptive version of Multi-streaming PAC. Each of these streams carries enough information to reproduce quality audio and the streams can be recombined in 32 kbps increments to reconstruct the original 128 kbps audio. More detail about Multi-streaming PAC can be found in Section E.

In the FM All-Digital implementation, Multi-streaming PAC can implement surround sound capability in about 280Kbps.

The Modem

In order to provide enough digital throughput to support the data rate required for CD quality while providing a scheme that is robust to support the requirements of mobility, OFDM modulation was chosen with each carrier modulated with QPSK. The OFDM modulation technique allows maximum use of the given bandwidth with minimum interference to the adjacent channel. OFDM is also used for the FM All-Digital system. However, the all-digital system will occupy the full FM band and thus have higher throughput.

In the FM Hybrid mode, the four digital audio streams produced by Multi-streaming PAC are then modulated and placed in four separate spectral allocations in order to provide frequency diversity. In addition, the streams are time sequenced, thus providing time diversity that results in improved robustness for a mobile receiver that is subjected to fading, shadowing, and interference. For example, a strong fade will only impact one or two streams allowing the remaining streams to be recombined.

As mentioned above, in the all-digital mode, the signal will occupy the portion of the spectrum currently inhabited by the FM signal. However the power level will be 12 dB higher than the digital hybrid signal. In addition, the spectrum from –100 kHz to +100 kHz will be partitioned into four streams allowing multi-streaming to be used in the all-digital mode.

Channel coding

The output streams from the Multi-streaming PAC processor are encoded for transmission with a very powerful error correction encoder and interleaver. These yield a system that operates with a very low Eb/No that pushes the current state of the art. This low E_b/N_o requirement combined with the high level of compression provided by Multi-streaming PAC results in a system that can operate at a very low Carrier to Noise ratio and, therefore provides superior range. *The algorithms developed by LDR are in the class of the most advanced and most powerful that can be realized today*

All these techniques, in combination, result in a very robust and high quality reception even in the most adverse conditions. The design methodology emphasized a trade-off accepting higher complexity for efficient use of the spectrum and robust operation in the presence of impairments.

The system functionality is enhanced by providing a number of ways to send auxiliary or ancillary data to the receivers to provide services such as: emergency broadcast, enhanced advertising and several operator defined data services. The data rates that can be supported range from 8 kbps up to 128 kbps depending on the trade off of audio rates and the error correction requirement for data.

Transmitter equipment

A high-level block diagram of the LDR FM Hybrid transmitter system is shown in Figure D-3. The corresponding signal flow is shown in Figure D-5. The FM Hybrid transmitter consists of two transmitters, the existing FM analog transmitter and an IBOC transmitter. The outputs are combined after processing by high power amplifiers. The FM transmitter is standard. The audio

processing and modulation is accomplished in a standard way using off-the-shelf equipment. This is a typical setup that is presently used in FM stations. This approach has the advantage that the transmitter is backward compatible, *i.e.* the FM transmitter is not modified.

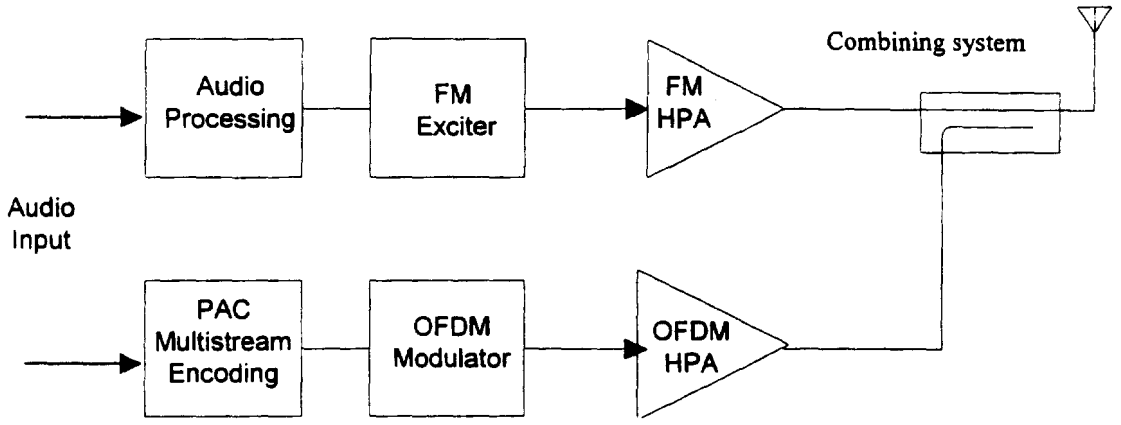

Figure D-3: Block Diagram for FM Hybrid Test System

The IBOC transmitter requires lower power but more linearity (typically Class A). A combining system integrates the RF from both transmitters onto a common cable and antenna system. The IBOC transmitters can be obtained commercially and LDR has been working with and has utilize or tested a number of these devices from companies such as Armstrong, Harris and others. LDR is also working with Electronics Research Incorporated to develop a high power combining system. In addition, LDR is exploring alternative transmitter schemes including common amplification where both analog and digital signals are fed into a linearized transmitter.

The FM Hybrid transmitter is designed to require minimal changes to the analog broadcast station in order to convert existing FM stations into a hybrid transmitter. The new elements are the power combiner and the relatively low power IBOC transmitter and exciter. The proposed approach is forward and backward compatible; the same power amplifier can be used later for the all-digital mode simply by removing the combiner. In addition, the FM Hybrid transmitter frequency stability requirement is more stringent that that of a typical FM station, thus a new frequency source may be required in some stations.

Receiver Design

A high-level block diagram of the LDR receiver system is shown in Fig. D-4 with the corresponding signal flow in D-6. The IBOC receiver includes two main subsystems: the first is an RF front-end, the second is the integrated IBOC processor. The IBOC processor includes an IBOC digital signal processor that samples and processes the FM Hybrid signal, and PAC/audio decoder that decompresses and combines the received audio streams.

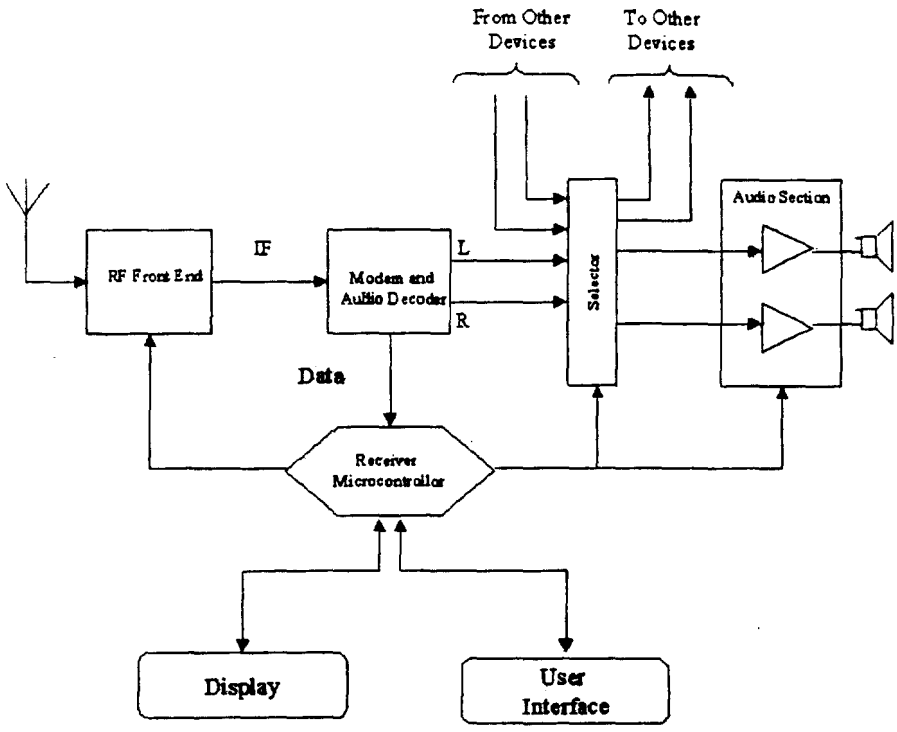

Figure D-4 IBOC Receiver Physical Diagram

The receiver's RF front end has some different requirements than standard FM receivers. The main difference is an "automatic gain control" (AGC) circuit. While the standard FM receiver has a constant high gain amplifier that saturates even at very small signal levels, the FM Hybrid receiver RF and IF circuits have to be constructed such that their gain can be controlled over a very large range of 100 decibels or more. Also, the linearity and the noise figure needs to be characterized for the many positions of the gain control. However, LDR has shown that the new design can use many components that are commonly used today, and, consequently, the new design will result in a marginal cost increase.

The IBOC processor performs signal enhancements such as interference cancellation, OFDM signal demodulation, error correction, and data de-multiplexing. The demodulated digital signal is then fed to the Multi-streaming PAC decoder and interface circuits. In addition, the digital signal processor demodulates and processes the FM signal. Due to the virtues of the digital processing, this results in a better FM signal quality than that provided by a typical receiver. The digital signal processor also performs other control functions such as gain control of the receiver.

Finally, Multi-streaming PAC decodes and combines the audio streams to produce the near-CD quality digital sound.

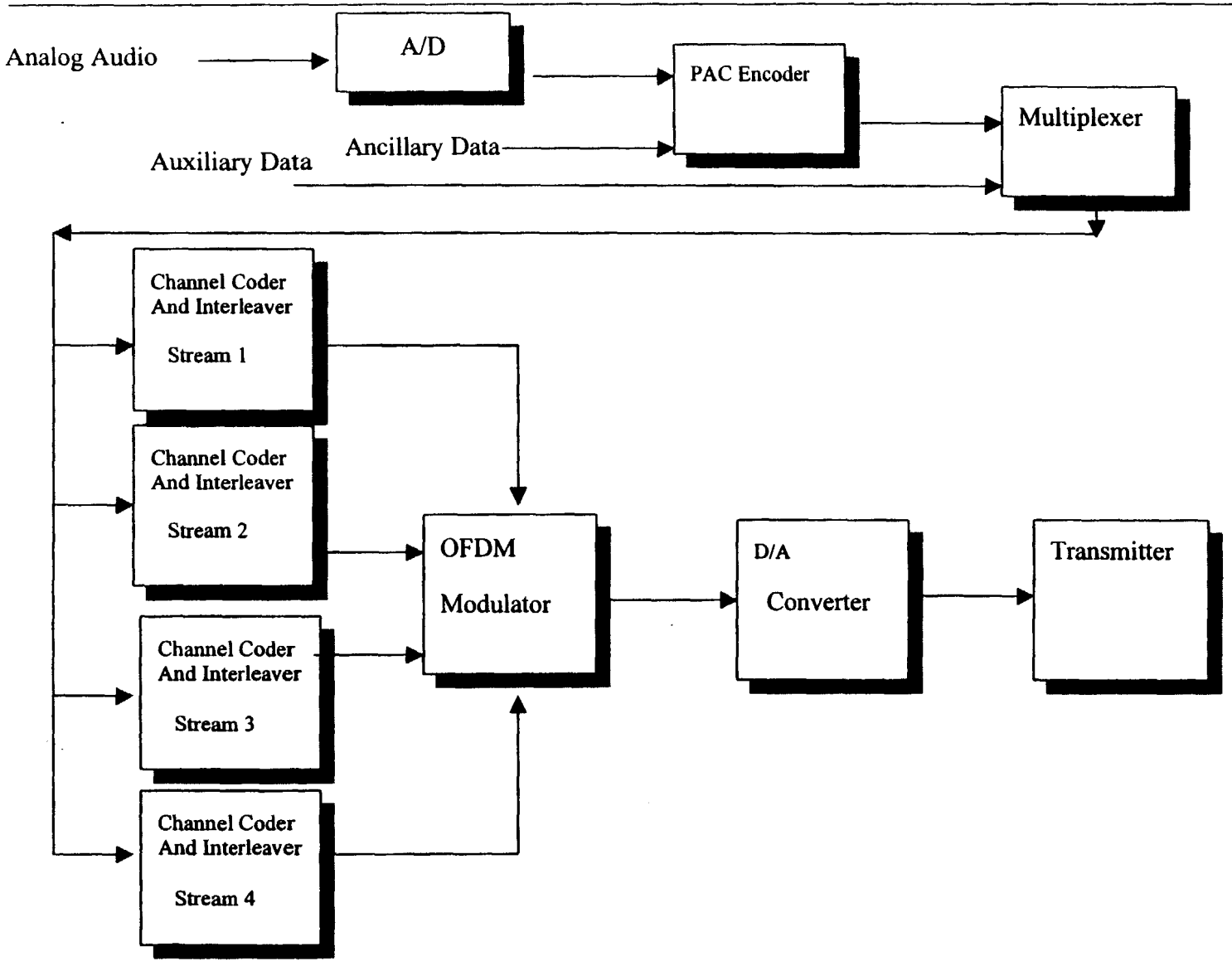

Figure D-5: FM Transmitter Signal Flow

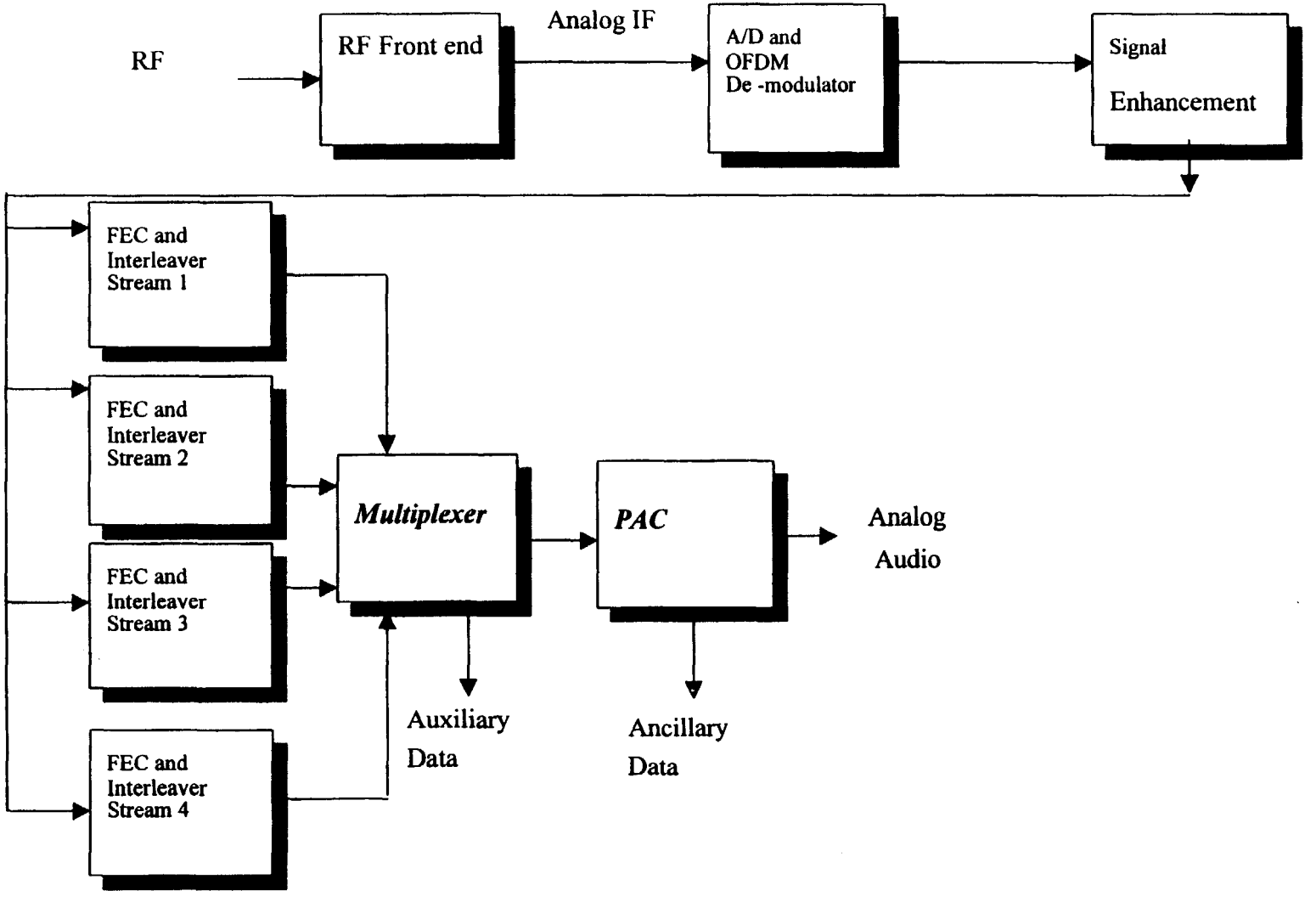

Figure D-6: FM Receiver Signal Flow

E

US OFFICE PRODUCTS

APPENDIX E

PERFORMANCE OF MULTI-STREAMING PAC™

Lucent Digital Radio, Inc.

20 Independence Blvd

Warren, NJ 07059, USA

LDR's FM Hybrid system employs a method of formatting transmitted information into four streams, two to the left and right of the analog signal as shown in Figure E-1. This multistream structure of the transmitted spectrum is formed using the multidescriptive output of the Perceptual Audio Coder (PAC) to modulate a digital carrier. Multi-streaming PAC takes an input audio signal and processes it into four complimentary streams at the output. Each one of these streams can be decoded to reconstruct the signal that was encoded by Multi-streaming PAC. The individual streams, when decoded, will each have one quarter the audio quality of the four streams. Moreover, when the four streams are combined the complimentary nature creates an audio signal with four times the quality of the single stream. This combined stream displays audio quality that is close to CD quality.

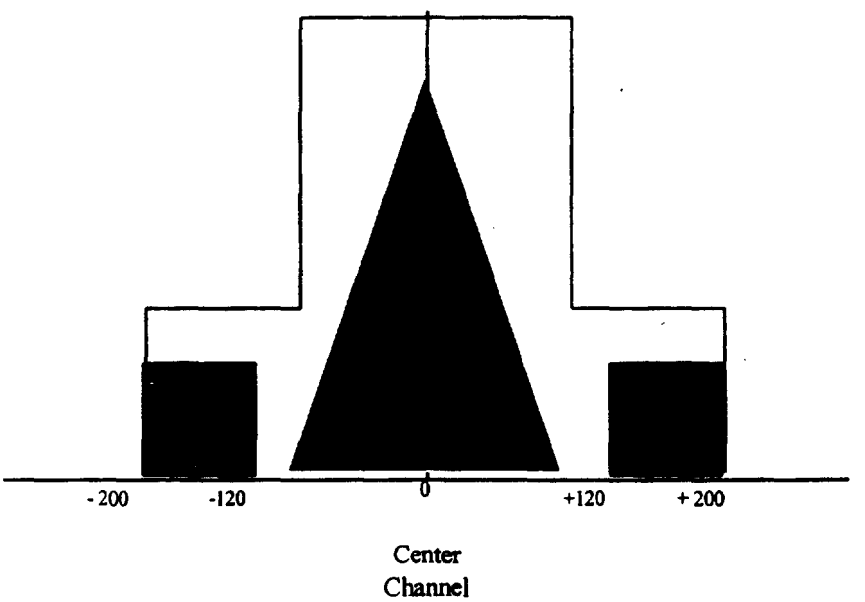

Figure E-1: FM Hybrid Transmit Spectrum

The multistream format combined with error correction provides robust protection to the audio information contained in the transmit signal. In typical mobile radio environments transmitted signals will be impaired by fading, shadowing and interference. The impact of these impairments on the quality of the received signal increases with distance between the receiver and transmitter. This typically results in a gradual degradation of received signal quality when using analog receivers. However, digital receivers typically display a more abrupt loss of signal quality. The multistream format enables a digital receiver to similarly gradually degrade the quality of the received audio with distance. This is realized by the implementation of multistream to have corrupted streams be identified at the receiver and thereby not used in reconstructing the audio signal. The received audio signal is thus constructed with fewer streams as the distance between the receiver and transmitter is increased past some impairment threshold. This leads to a gradual degradation as the averaging process receives fewer uncorrupted streams for use in the reconstruction of the audio signal. This averaging continues until it degrades to less than one stream and the quality becomes unacceptable.

The multistream format for AM Hybrid, shown in Figure E-2, does not employ the multidescriptive code used for FM because of bandwidth limitations. It consist of three streams, a core stream located in the center channel, where it receives the most protection, and

two enhancement streams in the upper and lower bands. The information in the core stream is more critical to the reconstruction of the audio than that in the enhancement streams. These streams are augmented with robust error correction and are time delayed relative to the analog. The three streams are decoded and combined at the receiver to reconstruct an audio signal with near FM quality.

The performance of the multistream system is robust even in the presence of first and second adjacent signals. The system robustness can be traced to the attributes of the complimentary Multi-streaming PAC output, error correction, frequency and time diversity derived from the way the audio information is used to create the multistream. In the case of jamming by a first adjacent signal, the system performance is determined by those streams that are unimpaired as operation of a first adjacent canceler yields minimal benefit. Although good results are obtained for single first adjacent interference in the lab, far less effective results are yielded in the field. This is true for both AM and FM as effectiveness of the FAC is significantly reduced by the presence of even small second adjacent signals and sensitivity to filter selectivity. The multistream system operates especially well in such conditions as some streams remain uncorrupted and can be used to reconstruct the audio signal.

© Lucent Digital Radio, Inc.

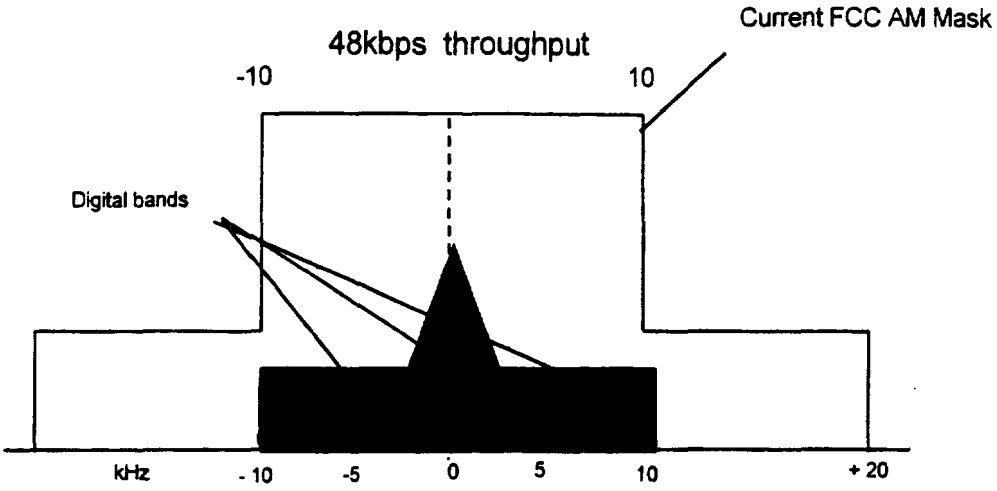

Fig. 2: AM Hybrid Transmit Spectrum

MULTISTREAM HYBRID IN BAND ON CHANNEL FM SYSTEMS FOR DIGITAL AUDIO BROADCASTING

Carl-Erik W. Sundberg[2], Deepen Sinha[1], David Mansour[1], Mohammad Zarrabizadeh[3], J. Nicholas Laneman[2]

[1]Lucent Digital Radio
Lucent Technologies
20 Independence Boulevard
Warren, NJ 07059

[2]Multimedia Communications Research Laboratory
Bell Labs, Lucent Technologies
600 Mountain Avenue
Murray Hill, NJ 07974

[3]Bell Labs
Lucent Technologies
101 Crawfords Corner Rd.
Holmdel, NJ 07933

ABSTRACT

New approaches to hybrid in band on channel (HIBOC) FM systems for digital audio broadcasting based on multistream transmission methodology and multidescriptive audio coding techniques are introduced in this paper. These ideas combined with a lower per sideband audio coding rate and more powerful channel codes result in robust transmission and graceful degradation in variable interference channels. By also using orthogonal frequency division multiplexing techniques with a nonuniform power profile combined with unequal error protection and sideband time diversity, we arrive at new HIBOC FM schemes with extended coverage and better peak audio quality than previously proposed. The paper provides approximate performance analysis for potential systems including audio coding quality.

1 INTRODUCTION

Systems for digital audio broadcasting of CD quality stereo music simultaneously with analog FM are being developed and evaluated in the United States. No new frequency band has been allocated for this service for terrestrial broadcasting. It is proposed that at first digital transmission will take place simultaneously with existing analog FM in the FM band. An evolution to an all digital audio broadcasting system is envisioned. A similar service is planned for AM.

Digital broadcasting inside the FCC emission mask can take place in a so called hybrid in band on channel (hybrid IBOC or HIBOC) system where the digital information is transmitted at a lower power level (typically 25 dB lower) than the analog host FM signal. This digital transmission is done in subbands on both sides of the analog host signal. The composite signal is typically 400 kHz wide with the FM carrier in the middle. The digital sidebands are typically about 70 kHz wide at the upper and lower edge of the composite signal (see power spectra below).

One current design proposal for hybrid in band on channel (also denoted HIBOC) FM systems uses 96 kb/sec perceptual audio coding, PAC, audio coding [1], [2] in a single stream transmission configuration over two sidebands with orthogonal frequency division multiplexing (OFDM) type of modulation. The two frequency sidebands for digital audio are transmitted on each side of the host analog FM signal inside the FCC emission mask. A uniform OFDM power profile is used. The channel coding is rate 4/5, memory 6 on each sideband with a total combined rate of 2/5, memory 6 in a complementary punctured pair convolutional (CPPC) channel coding configuration with both sidebands [3].

By employing the idea of multistream transmission [4] on the two sidebands combined with multidescriptive audio coding [4], [5] we achieve graceful degradation in the presence of potentially severe one sided first adjacent interference. Further robustness to this type of interference is obtained by introducing a bit error sensitivity classifier in the audio coding algorithm and transmit bits in separate classes with different channel codes and different frequency bands [6]. More powerful channel codes and sideband time diversity give further improvements, especially for slow fading.

2 NEW APPROACHES TO HIBOC FM

With new approaches, it should be possible to improve the signal to noise ratio on one sideband transmission with up to approximately 10 dB leading to much better digital audio broadcasting coverage. The elements in the improved systems are the following: Improved audio coding with 64 kb/sec per sideband allowing for more powerful rate 1/2 channel coding. Multistream (MS) transmission with multidescriptive (MD) audio coding with two level unequal error protection (UEP) and with sideband time diversity. Furthermore we use nonuniform OFDM power profiles for better first adjacent and second adjacent interference rejection, see Figure 1. This type of nonuniform power profile may also be better matched to the power amplifier.

Table 1 summarizes the key points of some of the possible systems. Figure 1 shows new power profiles and Figure 2 shows system number 3. All systems in Table 1 have a binary outer CRC code.

	Audio Coder Rate kb/s One/Two Sidebands	Channel Code Rate One/Two Sidebands		Power Profile	Source Coder Type	MS
1	96/96	4/5	2/5	a		1
2	64/128	1/2	1/2	a,a+,b	MD UEP	4/6
3	64/128	1/2	1/2	a′, a′+	MD UEP	4

Table 1. List of some possible multistream HIBOC FM configurations.

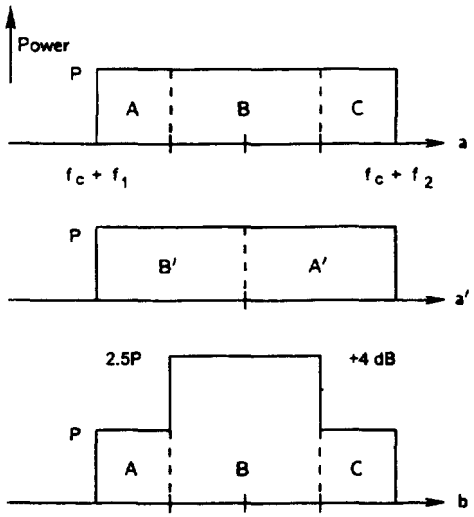

Fig. 1. Examples of possible OFDM power profiles. Upper sideband only is shown. Profiles a+ and a′+ have 3 dB higher power level. The nonuniform power profile b can be modified in several ways using, e.g., triangular or elevated triangular shapes with a peak in the middle of the band.

Generation of multiple source coded streams is achieved with the help of multistream PAC encoding techniques. Details of these may be found in [4], [5], [6]. Briefly, these fall into 3 categories.

1. *Multidescriptive Coding*: Source is encoded into two or more equivalent streams such that any of these may be decoded independently as well as in combination with other substream for corresponding audio quality.
2. *Bits-stream Partitioning*: The bits are partitioned into 2 or more classes of differing sensitivity to bit errors (typically utilized in an unequal error protection, UEP scheme).
3. *Embedded Coding*: Source is encoded with a *core* or essential bit stream and one or more of *enhancement* bit streams.

A particular transmission system may employ one or more of the above techniques for producing multistream representation of the source.

In systems 2 and 3 above, 4 stream encoding techniques with the overall source coder rate of 128 kbps are employed. Each of the 4 substreams corresponds to an average rate of about 32 kbps. To produce these four streams, the audio signal is first encoded using a multidescriptive scheme to produce 2 streams, at 64 kbps each. Each of the streams is then further subdivided into two substreams of equal sizes using a bit stream classifier; i.e., $\{I, II\}$, and $\{I', II'\}$. The resulting four streams - I, II, I', and, II' - are then transmitted over part of the FM spectrum as in systems 2 and 3, see Figure 2. In system 2, the most significant bits (streams I and I') are transmitted in the middle bands. In a 4 stream configuration, the outer bands are combined and in a 6 stream system sent separately.

Using the 4 stream system there are several built in digital blending modes which allow for graceful degradation. These modes are summarized in Table 2.

Available Streams	Corresponding Quality
$I+I'+II+II'$	Better than 96 kbps single stream PAC
$(I+II+I')$ or $(I'+II'+I)$	Better than 64 kbps PAC
$(I+II)$ or $(I'+II')$	Better than Analog FM
$(I+I')$	Analog FM like
I or I'	Better than Analog AM

Table 2. Blend Modes in the 4 Stream Multistream HIBOC FM Configurations. See Figure 2 for notations.

In [4] for AM systems, it was proposed that a delay be applied between the two sides in the Digital HIBOC FM system. This delay leads to time diversity gain in the presence of time varying fade conditions. This time delay concept can be advantageously applied to the multistream systems and leads to substantial gains as evident from the following simple calculation. Let's assume streams I and I' are delayed substantially with respect to each other so that the packet loss error events are independent for the two streams and have the identical probability, P_F. Then the probability that PAC decoder faces the loss of a particular packet in both streams I and I' is of the order of P_F^2. Given the complementary nature of audio information in streams I and I' it is therefore obvious that decodable audio would be available with a substantially higher probability in the multistream system with delay ($1.0 - P_F^2$ vs. $1.0 - P_F$).

3 SYSTEM PERFORMANCE EVALUATION

With a free distance of $d_f = 4$ for the $R = 4/5$, $M = 6$ code in the basic reference system, we can project the SNR gains on a Gaussian channel with the rate 1/2 codes

as shown in Table 3. Note that we have also added the $M = 6$, rate 2/5 (double sided) code in Table 3 for reference. Here we can see that the *one sided* 64 kb/sec rate 1/2 system, with $M = 6$ is comparable to the 96 kb/sec, double sided rate 2/5, $M = 6$ system. We can also conclude from Table 3 that the $M \geq 8$ rate 1/2 systems are superior to the $M = 6$, rate 2/5 scheme. It is also interesting to conclude that the rate 1/2, $M = 6$, double sided system with 128 kb/sec audio is identical to the one sided version in Table 3 and thus comparable to the rate 2/5, $M = 6$, 96 kb/sec system in asymptotic error rate performance for the Gaussian channel. (There may not be

Rate 1/2 Codes M	d_f	Gain in SNR relative to $M = 6,\ R = 4/5^*$	Gain in SNR relative to $M = 6,\ R = 2/5^{**}$
6	10	4.0 dB	−0.4 dB
8	12	4.8 dB	0.4 dB

$* \ d_f = 4 \qquad ** \ d_f = 11$

Table 3. Gains with rate 1/2 codes on a Gaussian channel with a uniform power profile a with $M = 10$ codes, an additional 0.6 dB is gained and with $M = 12$ codes, 1.1 dB.

"room" for a rate 1/2 code but rather a rate 8/15 code. Then the gains in SNR will be somewhat smaller.) The total gain on bits of type I with profile b is 8–9.4 dB on a Gaussian channel. These gain numbers will be higher for fading channels.

For the Gaussian channel we can predict a gain of approximately 8 dB in band B with a rate 1/2 code and a 64 kb/sec audio coder. In bands A and C the SNR gain is approximately 4 dB over the previous 96 kb/sec, rate 4/5 code with uniform energy on the OFDM symbols taking into account a 3 dB UEP gain. Denoting the two UEP error probabilities in band B and in bands A plus C P_I and P_{II} respectively, we estimate the following gains in channel SNR (E_s/N_0) over the baseline rate 4/5 system given in Table 4. We note from Table 4, that for power profile b, the two error rate curves P_I and P_{II} are 4 dB apart. Based on our experience from the UEP results in [6] for 96 kb/sec audio coders, the overall system will be performance limited by P_{II}.

Note that the UEP in Table 4 is obtained using one and the same rate 1/2 code in both sections I and II with separate average power levels in the two sections. Thus for power profile a there is no UEP gain with this approach. A UEP gain can be obtained by employing two separate channel codes with rates higher (II) and lower (I) than 1/2 with an average rate of 1/2, [6]. This can, e.g., be used with a uniform 3 dB power increase over the entire sideband. The channel codes now have to be found by code search. Alternatively, also called FD UEP approach [6] can be taken, where the same rate 1/2 code is

OFDM Power Profile	Band B, (B′) P_I	Bands A+C, (A′) P_{II}	Total sideband power increase
a, a′	4 dB	4 dB	0 dB
a+, a′+	7 dB	7 dB	3 dB
b	8 dB	4 dB	2.4 dB

Table 4. Combined approximate coding and power gain in SNR improvement with $M = 6$ rate 1/2 codes. The channel coding gain is 4 dB and with $M = 8$ it is 4.8 dB.

used in bands B and (A+C). In this case there is no gain on a uniform noise channel, but gains for first adjacent interference type of channels [6].

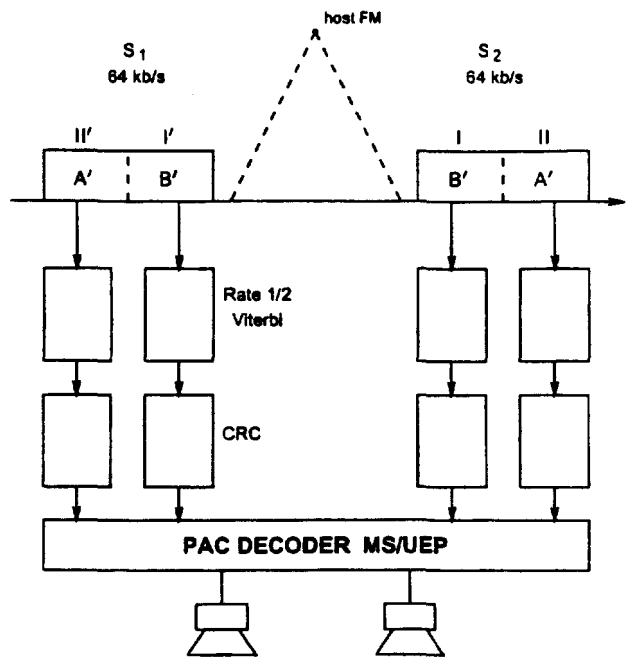

Fig. 2. Conceptual simplified block diagram for a proposed system based on 64 kb/sec multidescriptive PAC and two level UEP. Multistream transmission with 4 streams. This is system 3 in Table 1. Interleavers are not shown explicitly.

The above power and coding gains are based on the assumptions of perfect interleaving, coherent transmission, and an ideal additive white Gaussian noise channel at high SNR. In this section, we highlight results of extensive Monte Carlo simulations of the various multistream systems over additive white Gaussian noise as well as time- and frequency-selective fading channels. In all the bit error rate simulations, we assume an OFDM modem with 512 frequency subcarriers in a bandwidth of 400 kHz, corresponding to a single FM license band with carrier frequency located in the middle of the band. The

modulation format is either coherent QPSK or differential QPSK (DQPSK) across frequency. The two sidebands used for digital transmissions each contain the outermost 80 subcarriers at a given band edge, and for DQPSK in frequency, an extra subcarrier in each sideband, closest in frequency to the center carrier, is used as a pilot tone. We employ two $R = 1/2$ convolutional coders and Viterbi decoders, denoted I and II as in Figure 2, in each sideband. The interleaver size is roughly 300 msec.

We characterize the performance of the various multistream systems by estimating the bit-error rates P_I and P_{II} as functions of the average subcarrier SNR. When the simulation is properly normalized, this average SNR becomes E_s/N_0, the energy of a QPSK symbol over the noise power spectral density (one-sided). Since the performance of stream I on the left and right sidebands will be the same, and similarly for stream II, we present the results from only one sideband, and denote the bit-error rates as P_I and P_{II}.

We also evaluate the performance of the various power profiles, all using DQPSK in frequency, over several representative time- and frequency-selective Rayleigh fading channel models, referred to as EIA "Urban Fast", EIA "Rural Fast", EIA "Urban Slow", and EIA "Terrain Obstructed, Urban Fast", whose multipath and Doppler parameters are given in [7]. We compare the results of $M = 6$, $R = 1/2$ multistream systems to the performance of the single stream system. The single stream system employs $M = 6$, $R = 4/10$ convolutional punctured-pair convolutional (CPPC) codes over the two sidebands, and reduces to a $M = 6$, $R = 4/5$ convolutional code when one sideband is lost due to interference. Figures 3–4 show examples of simulation results for power profiles (a′) and (b) over the EIA channel models. Here we compare the bit error rate with the rate 4/5 code vs the rate 1/2 codes in one sideband. Note coding gains of more than 10 dB with power profile b. (Further gains will be obtained with the $M = 8$ code.) We also plot the bit error rate for the single stream rate 2/5 code for comparison. Note that the time diversity gains for the multistream system are not shown here. Since these are of a block error nature, they will be demonstrated next.

The multi-streaming capability of the PAC provides the radio link with reasonable time and frequency diversities as described in this section. We propose a novel time-frequency distribution of the PAC substreams which is highly robust against various channel impairments and fading conditions. The FM channel suffers from dispersion in both time and frequency domains. In time domain, very severe multi-path with delay spread ranges between 3 to 30 microseconds have been measured in urban and suburban environments. This broad range of delay spread corresponds to 30 to 300 kHz channel coherence bandwidth which is, at the upper limit, comparable to the

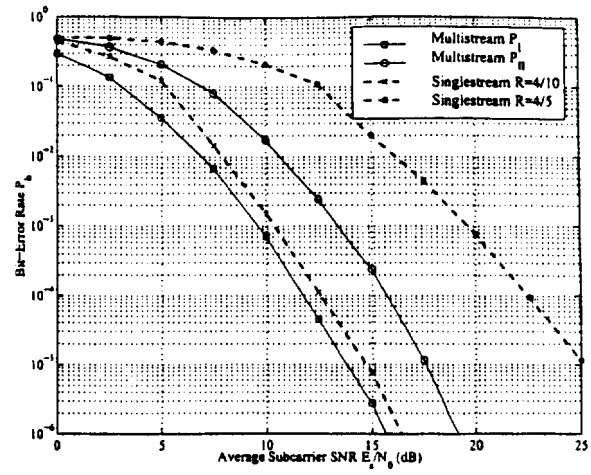

Fig. 3. Performance of the $R = 1/2$, $M = 6$ convolutional code with DQPSK in frequency and power profile (b) over the EIA "Urban Fast" fading channel model (5.2314 Hz doppler). Solid curves are for the multistream system, and dashed curves are for the single stream system.

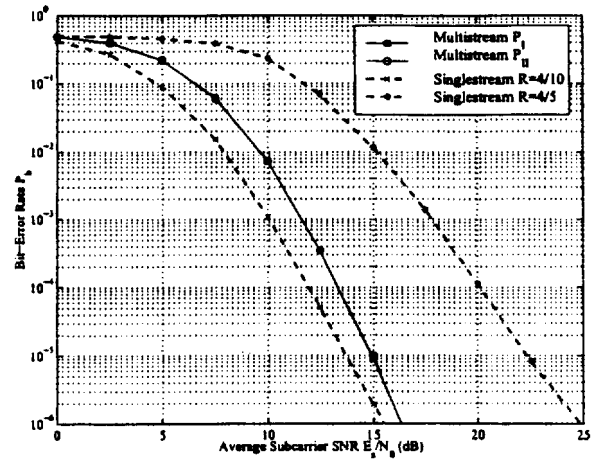

Fig. 4. Performance of the $R = 1/2$, $M = 6$ convolutional code with DQPSK in frequency and power profile (a′) over the EIA "Rural Fast" fading channel model (5.2314 Hz doppler). Solid curves are for the multistream system, and dashed curves are for the single stream system.

signal spectrum thereby introducing flat fades for low delay spread channels such as dense urban environments. In a worst case scenario, no frequency diversity scheme can mitigate the severe flat fading which may extend across the whole spectrum of the radio signal. In frequency domain, frequency dispersion ranges between 0.2 Hz to 15 Hz for very low to very high speed vehicles. For static channels, such as a slowly moving vehicle, the channel varies very slowly in time and therefore, time diversity schemes cannot combat various channel impairments such

PAC rate	5 dB	6 dB	7 dB	8 dB
I or I' only	99.1	99.926	100	100
$I + II$ or $I' + II'$	97.967	99.34	100	100
$I + II + II'$ or $I' + II + II'$	79.28	91.72	96.71	98.92
$I + I' + II$ or $I + I' + II'$	80.65	93.01	97.81	99.42
$I + I' + II + II'$ (full rate PAC)	65	85.97	94.57	98.35

Table 5. Frame throughput in % for different PAC rates and SNR (E_b/N_0) values under fast urban channel condition (5.2314 Hz doppler).

PAC rate	6 dB	7 dB	8 dB	10 dB	12 dB	15 dB
I or I' only	95.1	97.3	98.9	100	100	100
$I + II$ or $I' + II'$	85.9	91.6	95.0	99.9	99.9	99.9
$I + II + II'$ or $I' + II + II'$	60.2	68.0	76.3	83.6	93.1	95.8
$I + I' + II$ or $I + I' + II'$	57.7	67.2	76.3	87.2	92.2	94.6
$I + I' + II + II'$ (full rate PAC)	37	46.7	59.7	80.2	89.8	92.4

Table 6. Frame throughput in % for different PAC rates and SNR (E_b/N_0) values under slow urban channel condition (0.1744 Hz doppler).

as selective and flat fading conditions.

In our systems we try to achieve maximum diversity across both time and frequency dimensions within the allowable bandwidth and time delay using the multi-stream PAC format. This frequency distribution of the substreams is shown in Figure 3. At the transmitter side, the substreams I and II are mapped across the upper band, and the complementary substreams I' and II' are assigned to the lower band of the DAB signal with a 3 second delay.

We performed end-to-end simulation for the proposed multi-stream system under urban fast and urban slow fading channel models. In these simulations we have used 1024 tones over 400 kHz, 500 msec interleaving, rate 1/2 $M = 6$ coding and DQPSK in frequency. We considered PAC audio frames of 2000 encoded bits and analyzed the system performance in terms of frame error rate vs. signal to noise ratio. We utilized the 9-ray EIA model with 5.2314 Hz doppler for urban fast and the same EIA model with 0.1744 Hz doppler rate for urban slow in our analysis, [7]. The final results are listed in Table 5 and Table 6. Note the robustness and graceful degradation.

4 DISCUSSION AND CONCLUSIONS

We have introduced a number of new ideas for improving HIBOC FM systems. Multistream transmission, multidescriptive audio coding, unequal error protection, nonuniform power profiles and sideband time diversity improves significantly the robustness of HIBOC FM. A very high quality audio is achieved when both sidebands are received. Graceful degradation is obtained in the presence of first and second adjacent interference.

Further improvements are obtainable by introducing the List Viterbi Algorithm (LVA) [8] in the receiver. The LVA is backward compatible with a system using a standard Viterbi Algorithm. Finally yet another dimension for generalization of the above ideas. In all the systems above we assume that the host analog FM signal and the digital OFDM signals are nonoverlapping in frequency.

References

[1] Sinha, D., Johnston, J. D., Dorward, S. M., and Quackenbusch, S. R., "The Perceptual Audio Coder (PAC)," *The Digital Signal Processing Handbook*, pp. 42-1:42-17, CRC/IEEE Press, Editors: V. K. Madisetti and D. B. Williams, 1998.

[2] Jayant, N. S. and Chen, E. Y., "Audio Compression: Technology and Applications," *AT&T Techn. Journal*, pp. 23-34, Vol. 74, No. 2, March-April, 1995.

[3] Chen, B. and Sundberg, C-E. W., "Complementary punctured pair convolutional codes for digital audio broadcasting," To appear in *IEEE Transactions on Communications.*

[4] Lou, H-L., Sinha, D., and Sundberg, C-E. W., "Multistream transmission for hybrid IBOC-AM with embedded/multidescriptive audio coding," To be published.

[5] Sinha, D. and Sundberg, C-E. W., "Multidescriptive and other multistream techniques in the compression of audio signals," In submission to *ICASSP'00.*

[6] Sinha, D. and Sundberg, C-E. W., "Unequal Error Protection (UEP) for perceptual audio coders," *ICASSP'99, Conference record*, Phoenix, Arizona, April, 1999.

[7] Culver, R. D. et al., "EIA-CEG/DAR Subcommittee, WG-B/Laboratory Testing and SG-1/VHF Channel Characterization Test. Final Report," EIA-DAR Channel Characterization Task Group, July 1995.

[8] Chen, B. and Sundberg, C-E. W., "List Viterbi algorithm for continuous transmission of concatenated cyclic redundancy check and convolutional codes," To appear in *IEEE Transactions on Communications.*