Consumer Electronics Association
A sector of EIA
2500 Wilson Boulevard
Arlington, VA 22201-3834
(703) 907-7500
FAX (703) 907-7501

NATIONAL RADIO SYSTEMS COMMITTEE

National Association of Broadcasters
1771 N Street, NW
Washington, DC 20036-2891
(202) 429-5346
FAX (202) 775-4981

January 24, 2000

Ms. Magalie Roman Salas
Secretary
Federal Communications Commission
445 Twelfth Street, S.W.
Washington, D.C. 20554

DOCKET FILE COPY ORIGINAL ORIGINAL
RECEIVED JAN 2 4 2000 FEDERAL COMMUNICATIONS COMMISSION OFFICE OF SECRETARY

Re: Digital Audio Broadcasting Systems and their Impact on the Terrestrial Radio Broadcast Service, MM Docket No. 99-325, RM-9395

Dear Ms. Salas:

The National Association of Broadcasters ("NAB")[1] and the Consumer Electronics Association ("CEA")[2] submit the attached documents of the DAB Subcommittee of the National Radio Systems Committee ("NRSC") into the above-referenced proceeding on Digital Audio Broadcasting ("DAB") Systems. NAB and CEA are the co-sponsors of the NRSC, the objective of which is to serve as the definitive technical standards-setting body for free, over-the-air radio broadcasting systems in the United States.

As evidenced by the attached documents, NRSC is establishing whether IBOC DAB technology represents a significant improvement over existing analog services. Over the last two years after its re-activation, the NRSC DAB Subcommittee has been working to establish test guidelines and evaluative guidelines for the IBOC DAB proponents as they develop their systems.

On December 14, 1998, the DAB Subcommittee's Laboratory Test Guidelines were submitted into the record. We would now like also to submit to the Commission the *In-band/On-Channel (IBOC) Digital Audio Broadcasting (DAB) System Test Guidelines, Part II – Field Tests* (adopted March 4, 1999) and the *In-band/On-channel (IBOC) Digital Audio Broadcasting (DAB) System Evaluation Guidelines* (adopted April 17, 1999; revised May 25, 1999).

---

1 NAB is a nonprofit, incorporated association of television and radio stations and networks which services and represents the American broadcast industry.

2 CEA, an independent trade association and a sector of the Electronic Industries Association, is the principal trade association of the consumer electronics industry. CEA members design, manufacture, distribute and sell a wide variety of consumer electronics equipment, including radio broadcast receivers.

No. of Copies rec'd 0+11
List ABCDE

Further, as directed by the DAB Subcommittee at its last meeting, we are submitting a resolution that shows the Subcommittee's commitment to the IBOC DAB standard setting procedure and the Minutes from the DAB Subcommittee meeting held on January 8, 2000.

We hope these materials are helpful to the Commission. Additionally, NRSC is currently evaluating data from one IBOC DAB proponent, and expects to submit a report to the Commission by the end of the first quarter of 2000.

Respectfully submitted,

Valerie Schulte
National Association of Broadcasters
1771 N Street, N.W.
Washington, D.C. 20036
(202) 429-5430

Michael Petricone
Consumer Electronics Association
2500 Wilson Boulevard
Arlington, VA 22201
(703) 907-7500

Attachments

2500 Wilson Boulevard
Arlington, VA 22201-3834
(703) 907-7500
FAX (703) 907-7501

NATIONAL RADIO SYSTEMS COMMITTEE

1771 N Street, NW
Washington, DC 20036-2891
(202) 429-5346
FAX (202) 775-4981

DAB Subcommittee

In-band/On-channel (IBOC) Digital Audio Broadcasting (DAB) System Test Guidelines

Part II – Field Tests

(as adopted by the Subcommittee on March 4, 1999)

Sponsored by the Consumer Electronics Manufacturers Association and the National Association of Broadcasters

Table of Contents

1 INTRODUCTION 3

2 PROPONENT SUBMISSIONS TO THE NRSC 4

3 DEFINITIONS 6

4 FIELD TEST AUDIO EVALUATION 8

4.1 IMPAIRMENT OBSERVATIONS 9

4.2 INFORMAL SUBJECTIVE EVALUATION 9

5 FIELD TEST GUIDELINES 12

5.1 FM-BAND PORTION 13

5.1.1 Test A - System Calibration 13

5.1.2 Test B – Strong signal with low interference 14

5.1.3 Test C – Single interferer 15

5.1.4 Test D – Two interferers 16

5.2 AM-BAND PORTION 17

5.2.1 Test A - System Calibration 17

5.2.2 Test B – System performance within protected contour and low interference (day) 18

5.2.3 Test C - System performance within protected contour (day and night) 19

List of Appendices

APPENDIX A. RECOMMENDED FIELD TEST OUTLINE – FM-BAND 20

APPENDIX B. RECOMMENDED FIELD TEST OUTLINE – AM-BAND 26

APPENDIX C. ANALOG RECEIVER SELECTION (FIELD TESTING) 31

APPENDIX D. TEST MATRIX – FIELD TEST GUIDELINES, FM-BAND PORTION 34

APPENDIX E. TEST MATRIX – FIELD TEST GUIDELINES, AM-BAND PORTION 36

APPENDIX F. SUGGESTED FIELD TEST ASSESSMENT DATA LOGGING CONVENTIONS AND REPORTING FORM 38

APPENDIX G. DAB SUBCOMMITTEE GOALS & OBJECTIVES 41

List of Tables

TABLE 5-1. FIELD TEST GUIDELINES SUMMARY – IBOC SYSTEM, FM-BAND PORTION 12

TABLE 5-2. FIELD TEST GUIDELINES SUMMARY – IBOC SYSTEM, AM-BAND PORTION 12

List of Figures

FIGURE 1. SUGGESTED AUDIO PROCESSOR CONFIGURATION TO FACILITATE INFORMAL SUBJECTIVE EVALUATION OF FIELD TEST AUDIO 11

(ADDITIONAL TABLES AND FIGURES MAY BE FOUND IN THE APPENDICES)

1 Introduction

These test guidelines, developed by the Test Guideline Working Group (TGWG), Mr. Andy Laird, Chairman, of the DAB Subcommittee of the National Radio Systems Committee (NRSC), are the result of a cooperative effort between broadcasters, receiver manufacturers, and IBOC DAB system developers. Fundamentally, they describe the field test results needed by the broadcasting and receiver manufacturing industries in order to assess the viability and desirability of proposed IBOC systems.

Part I of these test guidelines, covering laboratory tests, was formally adopted by the DAB Subcommittee at its December 3, 1998 meeting. This document (Part II), combined with Part I, fully defines the NRSC's requirements for IBOC system test results needed for its evaluative process to commence. Note that the release of these test guidelines documents in two parts has been done solely to help expedite the test process and *is not* meant to imply that submissions to the NRSC should be in two parts, as well. This guideline release schedule was selected to follow the natural progression of system development, which is from the laboratory into the field, and allows the NRSC to provide IBOC proponents with its test guidelines in the most timely fashion possible.

As fully explained in Section 2 of Part I (included in this document for completeness), proponent submissions are expected to be complete and include any and all laboratory and/or field test data which the proponent wishes the NRSC to consider. Additional information contained in Part I, of an introductory and general nature, is not repeated here and should be carefully reviewed by proponents prior to data submission to the NRSC.

Proponent submissions received by the NRSC which follow these guidelines can be expected to undergo a thorough review and analysis by the DAB Subcommittee, as it strives to determine whether or not submitted systems represent a significant improvement over the existing AM and FM analog radio transmission methods in use today, and otherwise appear to be viable IBOC DAB systems (see Appendix G for a statement of the DAB Subcommittee's Goals and Objectives). This evaluation process will be discussed in detail in a separate NRSC report entitled "IBOC DAB System Test Guidelines – The NRSC Evaluation Process," currently under development and expected to be released shortly.

2 Proponent Submissions to the NRSC

(This section is taken in its entirety from Part I of the NRSC's IBOC DAB System Test guidelines, and is included here for sake of completeness.)

Proponents need to submit the following information to the NRSC in order for the DAB Subcommittee to be able to effectively evaluate their system:

a) Detailed system description including:
   i) High level description and theory of operation
   ii) Transmission equipment description / requirements
   iii) Receiver equipment description / requirements
   iv) Compliance with (or changes necessary to) FCC rules

b) Description of test procedures followed – note that Appendices A and B include suggested laboratory test procedures which are based on the experience gained by the NRSC in its prior DAB test efforts (Part II of these guidelines will include similar information for field testing). It is especially important that proponents electing to use test procedures which differ significantly from the suggested procedures provide detailed information on the procedures which were followed.

c) Statement of oversight – proponents are expected to retain an independent, third-party observer (preferably an expert in broadcast and/or digital communications engineering) who will follow and/or review the system testing (done by the proponent) closely and personally certify the submitted results as an accurate record of the actual measured system performance. Alternatively, proponents may elect to make use of an independent system testing contractor for implementation of the test program.

   This is a vital part of the proponent submission, which will allow the NRSC to evaluate with confidence the proponent-submitted data as an accurate depiction of performance.

d) Test results obtained using procedures described in b) above. Proponents are strongly encouraged to follow the labeling and other conventions regarding test results established in this test guidelines document.

In accordance with DAB Subcommittee policy, data submissions (system descriptions, test procedures, test results, etc.) made by IBOC proponents to the NRSC for purposes of evaluation must be:

- on complete systems, that is, systems which provide for IBOC DAB in both the AM and FM bands. A submission made on a system which only operates in one of these bands will only be considered if, along with that submission, the proponent states its intention to *only* support IBOC operation in that single band, and furthermore, why they have elected not to develop a system which supports operation in both bands. Note that in such instances, the NRSC may elect not to evaluate the submission, in particular if submissions have been made by other proponents which support operation in both bands.

- made at the conclusion of the system development effort, that is, must represent the performance of a completed system. Test results taken on partially completed systems

and/or preliminary results from (comprehensive) test programs will not be accepted, nor will multiple submissions (*e.g.*, revised submissions) for a system already submitted.

Again, proponents are strongly encouraged to follow the NRSC IBOC System Test Guidelines (i.e. this document and Part II, Field Tests, when available) when preparing a submission, and indicate as part of their submission which desired test results (as stated in the Guidelines) are included. Appendices C and D (system test matrices) of this document were developed to serve as "checklists" which proponents can include with their submission, providing a straightforward way to indicate which requested test results have been obtained (similar checklists will be included in Part II).

3 Definitions

Acquisition/re-acquisition performance – the aspect of IBOC system performance characterized by the length of time needed to acquire (initially) or re-acquire (after an interruption in service) an IBOC transmission.

Analog main channel audio performance – performance (objective and/or subjective) of the analog main channel audio portion of a sound broadcasting transmission, either AM or FM, IBOC or (traditional) analog.

Bit Error Rate (BER) – a measure of digital system performance, simply, the ratio of the number of bits received in error, to the total number of bits received.

Co-channel signal – the RF signal co-located with, i.e. having the same center frequency as, a desired sound broadcasting signal. Note that the co-channel signal, for the purposes of IBOC DAB system evaluation, can be either a standard analog signal or an IBOC DAB signal.

Data transmission performance – performance of that portion of the IBOC system set aside for data transmission specifically (i.e. not used to carry the digital audio bit stream), typically characterized by BER, FER, etc. As used in Section 5 and unless otherwise indicated, this term refers to the performance of the "auxiliary" or "ancillary" data transmissions (terms often used by IBOC proponents and others to describe this portion of the system).

Desired signal – refers to a sound broadcasting signal (AM or FM, IBOC or non-IBOC) under test.

Digital audio performance – performance (objective and/or subjective) of the digital audio portion of the IBOC system.

First adjacent signal – the RF signal located either ± 200 kHz (for FM) or ± 10 kHz (for AM) away from the center frequency of a desired sound broadcasting signal. Note that the first adjacent signal, for the purposes of IBOC DAB system evaluation, can be either a standard analog signal or an IBOC DAB signal.

Frame – a particular segmentation of bits (or bytes) occurring within a system by virtue of some aspect of the system's design. For example, audio coding schemes such as PAC and MPEG-2 AAC format the coded digital audio data streams into frames of a specific definition, delineated by specific patterns of bits (*e.g.*, headers, etc.) and with a predefined structure.

Frame Error Rate (FER) – a measure of digital system performance, simply, the ratio of the number of frames received in error, to the total number of frames received.

Host analog main channel audio performance – performance (objective and/or subjective) of the analog main channel audio portion of an IBOC system, considered to be the "host" to the IBOC digital carriers.

Host signal – the analog (AM or FM) sound broadcast signal which exists in the same channel as the digital portion of an IBOC DAB signal.

Host subcarrier performance – performance (objective and/or subjective) of the subcarrier (i.e.

SCA) signals associated with the analog carrier portion of an IBOC system (typically applies to FM systems only).

In-band/on-channel (IBOC) DAB – a method of digital audio broadcasting in which a digital audio signal is combined, in a mutually compatible fashion, with an existing analog audio signal (either AM or FM), in such a manner as to be consistent with the FCC rules (present or future) for AM and FM sound broadcasting.

Nighttime service – (for AM stations) defined as broadcast service occurring between 2 hours after sunset and 2 hours before sunrise.

Second adjacent signal – the RF signal located either ± 400 kHz (for FM) or ± 20 kHz (for AM) away from the center frequency of a desired sound broadcasting signal. Note that the second adjacent signal, for the purposes of IBOC DAB system evaluation, can be either a standard analog signal or an IBOC DAB signal.

Third adjacent signal – the RF signal located either ± 600 kHz (for FM) or ± 30 kHz (for AM) away from the center frequency of a desired sound broadcasting signal. Note that the third adjacent signal, for the purposes of IBOC DAB system evaluation, can be either a standard analog signal or an IBOC DAB signal.

Total Average Digital Power – the average RF signal power contained in the entire digital carrier portion of the IBOC signal (all digital carriers and sidebands taken together).

Undesired signal – refers to a sound broadcasting signal (AM or FM, IBOC or non-IBOC), present along with a desired signal, as either a co-channel or adjacent channel signal.

4 Field Test Audio Evaluation

Evaluation of audio signals obtained in a field testing environment presents numerous challenges over similar evaluations done on laboratory data. This stems from the fact that there are a host of uncontrollable variables and unknown elements in a field test, from the state of the equipment in the broadcasting facility, to the material being broadcast, to the intricacies of the transmission environment itself.

To understand the role that "field test audio" plays in the evaluation of an IBOC system, one must remember that *precise* characterization of the unimpaired audio quality of these systems is addressed during laboratory testing of such systems, as discussed in of Part I of these guidelines (refer to Section 4, "Subjective Evaluation Guidelines"). It is not expected (nor would it even be possible) that data collected in the field could undergo the type of subjective analysis discussed in Part I and generate meaningful results.

Conversely, there are aspects of the performance of an IBOC system which cannot be established by laboratory experimentation and must be determined by field testing, most notably impairment observations and "informal" (field test) subjective evaluation, and it is these aspects which are discussed in the subsections below. These aspects are mentioned here together, but of the two, the NRSC considers the impairment observations to be far and away the more significant. In fact, unless the audio signals are handled properly (as discussed in greater detail below), the results of any field test subjective evaluation, informal or otherwise, may yield little or no information pertinent to the evaluation of the IBOC system under test.

During field test data collection, it is expected that proponents will simultaneously record, preferably on digital media (digital audio tape, computer hard disk, etc):

- IBOC digital audio (system under test);
- Analog host audio, using at least two different analog receivers (as discussed in Appendix C).

These recordings should be done so that it will be possible, after the fact, to time-align individual recordings (for example, the IBOC digital audio and one of the analog host audio recordings) and analyze their performance under similar reception conditions. Proponents are also encouraged to collect other supplemental data, such as video recordings of the reception environment, received RF signal strength, RF adjacent channel environment, etc., in synchronism with the collected audio, to allow for a full interpretation of the results.[1]

The NRSC expects proponents to collect a significant part, if not the majority, of the field test data from a mobile platform, given that the mobile environment offers some of the most severe and demanding conditions encountered, and because this is the environment where a large percentage of radio listening occurs.[2] Consequently, the audio and data recording equipment suggested in the preceding two paragraphs is expected to reside on a mobile platform.

In addition, proponents may also want to consider establishing a fixed data collection

[1] For an example of a prior DAB field test data collection effort, refer to "Report of the Field Test Task Group; Field Test Data Presentation," Working Group B "Testing" of the CEMA-DAR Subcommittee, December, 1996.

[2] See Appendix C of Part I of these guidelines for statistical information on listening habits.

site, located in the vicinity of where the mobile observations will take place, in a location with favorable reception conditions. Data from this fixed-site might prove useful during analysis, for resolving questions about the data collected at the same time on the mobile platform, for example, to try and determine if a particular impaired segment were a function of mobile reception or due to a transmission problem. This fixed-site data would be most useful if it were obtained using the same types of receivers (analog, in particular) as used on the mobile platform.

4.1 Impairment observations

The principle benefit to be obtained from analysis of IBOC systems in field tests, given that formal subjective analysis of unimpaired audio quality is best performed in a laboratory, is to establish how channel impairments manifest themselves in received IBOC (and host analog) audio. Typical channel impairments include multipath interference, signal blockage, adjacent and co-channel interference (analog or IBOC), etc., and are likely to be most pronounced in a mobile reception environment.

Impairment observations, in this context, involve listening carefully to an audio signal for undesirable sounds (not part of the original audio program), or no sound at all (i.e. a muted condition) or artifacts (such as can occur in perceptually coded audio, or in the case of analog, such phenomena as blend to mono), caused by problems with reception of the audio signal's radio source. These observations are subjective in nature since these undesirable sounds are identified by a human listener and not measured with an objective measuring device.

One possible way to conduct such observations is exemplified in the data record of the EIA/DAR Subcommittee's 1996 field test of DAB systems, referred to in the previous section. During those tests, two expert listeners in a mobile test vehicle continuously monitored the received digital audio signals and, using a computer keypad, indicated which of three conditions existed at any given time: unimpaired, impaired, or muted audio. This determination was logged along with the rest of the data being collected during the field test, and at the conclusion of the test, it was possible to compare visually (and otherwise) the occurrence of audio impairments with other parameters such as vehicle speed, received RF signal level, etc. An example of such a graphical comparison is given in Appendix F. It was also possible to develop statistics on the audio impairments including percent of the time (for a given test run) that the audio was unimpaired, impaired, or muted.

Although the impairment observations were made in real time during the EIA/DAR tests, this need not be the case. Equally valid evaluations could also be obtained after the fact, using digital audio recordings of the received audio signals. Ideally, proponents interested in submitting data to the NRSC would perform these observations on the host analog audio, as well, since the NRSC's primary objective is to be able to determine how these two services compare. Observers should have common and consistent training to conduct evaluations.

4.2 Informal subjective evaluation

Characterization of audio impairments experienced in the field, as just discussed, is vital to the overall assessment of the IBOC system performance. This information, combined with the unimpaired subjective evaluation results obtained in the laboratory, provides the basis for audio quality evaluation of an IBOC system. However, the field test audio impairment results

provide a "real-world" quality which broadcasters and receiver manufacturers can also use to complete assessments.

Under certain conditions (discussed below) it becomes possible to utilize the same audio information used for the impairment analysis in an "informal" field test evaluation, with the goal of establishing an opinion as to the "quality" of the IBOC digital audio, in particular, compared to the "quality" of the analog audio which was collected at the same time (and under the same conditions). If this is to be done, then as many unrelated variables as possible must be eliminated from the audio being evaluated.

It is important to note that collectively, field test audio will have been passed through various radio stations in various markets, and that there are many things taking place within each of these stations affecting the quality of the received audio (and outside of the control of the IBOC system evaluation process) in addition to the transmission system itself. If an informal evaluation of field test audio quality is to be done, the field testing methodology must be structured to minimize these non-transmission system effects, so that the resulting evaluation will be able to highlight differences in transmission system performance.

Some of the variables that can affect the field test audio include:

- The microphones, microphone processing, and pre-amps used;
- The quality of the mixing desk and operator;
- The broadcast audio chain processing;
- Additional electronic elements in the broadcast chain such as distribution amplifiers, routers, STL's;
- Transmitter type and tuning, antenna system and bandwidth, etc.

While as a practical matter many of these variables cannot be controlled (nor eliminated) from the field test environment, the NRSC's TGWG has concluded that the most important of these, the audio processing element, must be implemented in a controlled fashion if meaningful results are to be obtained from any informal field test audio quality assessments.

To understand this consider that, as just discussed, the field tests will use the programming from numerous *operational* radio stations, whose normal station practice is to design audio processing to project station "image" and overcome inherent problems specific to their own transmission systems and propagation environments. This processing, while vital for station operation, becomes a huge distraction when the goal is to compare the performance of analog and digital audio systems for a particular broadcast plant. In particular, with this customized processing in use, it is important to note that any comparison between the station's analog audio and its IBOC digital audio may be more a comparison of audio processors than it will be of transmission systems.

This situation can be made more workable, from a subjective evaluation standpoint, if the station under test agrees to use (for its analog signal) a processor with settings "matched" to the processor and settings used for the IBOC digital signal path, during the time periods when field test data is being collected. In this manner, the dynamic characteristics of the two systems (analog and digital) will be as close as possible, thereby eliminating one of the most prominent distractions as a variable. This situation is described pictorially in Figure 1. Alternatively, it may be possible to process the IBOC digital audio using audio processing parameters similar to

those used for the analog signal. A proponent choosing to perform this test is encouraged to work with the manufacturer of the processing equipment to produce this "match."

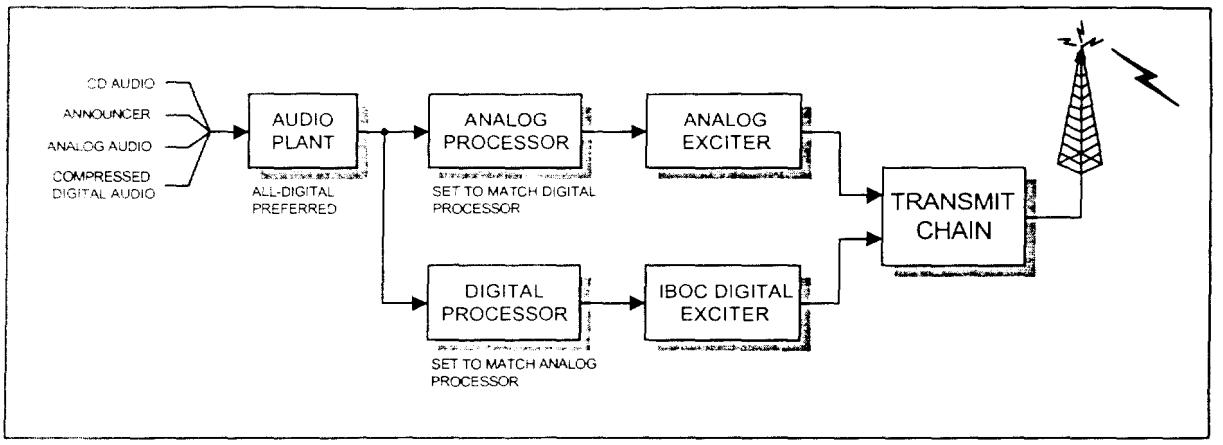

Figure 1. Suggested audio processor configuration to facilitate informal subjective evaluation of field test audio.

It must be emphasized that this matching of analog and digital processors is being suggested ONLY to foster the fairest comparison possible between the analog and digital systems, and as a way of reducing the variables inherent in these test environments so as to isolate the effects of the transmission systems on audio performance. This should not be seen as suggesting that any system needs to be operated in any specific manner during normal broadcast operations. Having said that, it must also be pointed out that without such processor matching, it would be virtually impossible to derive any meaningful information regarding subjective audio quality, informal or otherwise, from the comparison of collected field test audio.

5 Field test guidelines

Table 5-1 and Table 5-2 below summarize the field test guidelines for IBOC systems (FM-band and AM-band portions, respectively).

Proponents are referred to Appendices A and B which contain suggested test procedures for field tests. These procedures are recommended but not required, and have been developed by the TGWG specifically for these guidelines. Some additional comments are in order regarding field testing:

- Systems should be tested in the configuration(s) to be used for conventional broadcast service i.e. if the system were in actual commercial (or otherwise) operation. This comment applies in particular to transmitter configurations *e.g.*, use of single versus multiple antennas (FM IBOC especially) and analog/digital signal combiners.

- System tests should exercise and demonstrate all modes of operation in particular all modes which are activated as conditions at the receiver site become degraded.

- For AM system tests, stations of different classes and representative of different antenna configurat ons (non-directional, directional) should be included in the field test program.

Table 5-1. Field Test Guidelines Summary – IBOC system, FM-Band portion

SECTION	TEST NO.	DESCRIPTION
5.1.1	A	Calibration
5.1.2	B	Strong signal with low interference
5.1.3	C	Single interferer
5.1.4	D	Two interferers

Table 5-2. Field Test Guidelines Summary – IBOC system, AM-Band portion

SECTION	TEST NO.	DESCRIPTION
5.2.1	A	Calibration
5.2.2	B	System performance within protected contour and low interference (day)
5.2.3	C	System performance within protected contour (day and night)

5.1 FM-band portion

5.1.1 Test A - System Calibration

Purpose: To constantly maintain IBOC system hardware and associated test equipment in a known, calibrated state, and to establish clear and complete documentation of that state; and, to establish the interference conditions, by calculation and measurement, along field test routes.

Desired results:

1) Average and peak RF power measurements of analog and IBOC signals, at exciter and high-power amplifier (HPA) outputs (total average digital power in the case of IBOC digital signals);
2) RF spectrum plot at combiner output showing shape and spectral occupancy of IBOC signal;
3) Digital audio subjective performance baseline—using "Threshold of Audibility" (TOA) or some other subjective criteria—versus additive white Gaussian noise (AWGN) or weak signal;
4) Baseline characterization of system digital performance, both digital audio and data transmission paths (BER, FER, or other similar parameter) versus AWGN or weak signal;
5) Analog transmission system test results (frequency response, distortion characteristics of main channel audio, synchronous AM noise characterization, etc.);
6) Transmit and receive antenna and RF distribution system performance data, including specifications, installation description, swept data (vs. elevation and azimuth), etc.;
7) Calibration record of equipment used for testing;
8) Interference levels (calculated and measured) along field test routes.

Comments:

- Systems should be calibrated regularly to insure precise and accurate test data;
- Suggested settings for RF spectrum plots – RES BW 1 kHz, sweep span 2 MHz (transmission line test);
- Proponents should provide assurance that entire transmission link, from audio source to antenna, is functioning according to good engineering standards;
- Multiple data points (BER, FER, etc.) should be collected so as to allow for performance versus carrier-to-noise ratio data plots;
- Other desired data (needed for full analysis and interpretation of results):
  - Continuous 500 kHz span spectrum plot recordings
  - Visual recording depicting the test environment
  - Digital recording of IBOC audio, analog audio (refer to Appendix C for analog receiver guidelines)
  - Digital error rate performance metric (IBOC audio path, data transmission path)
- Calibration records should be signed and dated.

5.1.2 Test B – Strong signal with low interference

Purpose: To characterize the **digital audio** and **data transmission** performance of the IBOC system in a low interference environment and in an environment where multipath interference is the predominant form of interference; and, to characterize the **host compatibility** and **analog subcarrier compatibility** under these conditions.

Desired results:

1) System performance in test area(s) with low multipath. Preferred test route(s) are from weak to strong desired signal.
2) System performance in test area(s) with strong multipath. Preferred test route(s) are in areas of moderate desired signal level, and include occurrences of "stoplight" fades.
3) Impact of IBOC signal presence on host main channel audio signal (i.e. host compatibility).
4) Impact of IBOC signal presence on host analog 67 kHz and 92 kHz subcarrier signals (i.e. analog subcarrier compatibility).

Comments:

- For these tests, any 1st adjacent analog signals should be at least 10 dB below the **digital** signal throughout the test area; and, any 2nd adjacent analog signals should be no more than 20 dB above the host analog signal.
- For strong multipath tests, route(s) should include some terrain obstructions with delays between 13 and 18 μsec, and, collected data should include very slow-speed test runs.
- For host compatibility tests, IBOC analog station broadcasting classical music with conservative analog processing preferred; and, fixed location tests using receivers with PLL stereo decoders recommended.
- For subcarrier compatibility tests, spectrum plots of the subcarrier receiver input (spanning 1 kHz -100 kHz) should be obtained, both in the presence and absence of IBOC digital signal (off-air or transmission line sample of composite signal).
- For each test, objective data (*e.g.*, BER, FER, etc.) on both digital audio and data transmission paths, and impairment data (*e.g.*, TOA, POF, etc.) on digital audio and analog audio desired; refer to Appendix C for analog receiver guidelines.
- Multiple data points (BER, FER, etc.) should be collected so as to allow for performance versus carrier-to-noise ratio data plots.
- Other desired data (needed for full analysis and interpretation of results):
  - Continuous 1 MHz span spectrum plot recordings
  - Visual recording depicting the test environment
  - Digital recording of IBOC audio, analog audio
  - Digital error rate performance metric (IBOC audio path, data transmission path)

5.1.3 Test C – Single interferer

Purpose: To characterize the **digital audio** and **data transmission** performance of the IBOC system in the presence of a single first adjacent channel inteferer.

Desired results:

1) System performance in test area(s) with a single first adjacent channel interferer (at FCC limit) and low levels of multipath interference. Preferred test route(s) along path where desired signal averages close to the signal level expected at the protected contour, and interferer averages 6 dB below desired signal level.
2) Same as 1) except with moderate to strong levels of multipath interference.
3) System performance in test area(s) with a single first adjacent channel interferer (above FCC limit). Preferred test route(s) along path where desired signal averages close to the signal level expected at the protected contour, and interferer averages 12 dB above desired signal level.
4) Same as 2) except with moderate to strong levels of multipath interference.

Comments:

- For these tests, any additional 1st adjacent analog signals (besides primary interferer) should be at least 25 dB below the digital signal throughout the test area; and, any 2nd adjacent analog signals should be no more than 20 dB above the host analog signal.
- Suggest that D/U ratio along test route be calculated and measured, and that a comparison of these data be submitted along with results.
- For each test, objective data (*e.g.*, BER, FER, etc.) on both digital audio and data transmission paths, and impairment data (*e.g.*, TOA, POF, etc.) on digital audio and analog audio desired; refer to Appendix C for analog receiver guidelines.
- Multiple data points (BER, FER, etc.) should be collected so as to allow for performance versus carrier-to-noise ratio data plots.
- Other desired data (needed for full analysis and interpretation of results):
  - Continuous 1 MHz span spectrum plot recordings
  - Visual recording depicting the test environment
  - Digital recording of IBOC audio, analog audio
  - Digital error rate performance metric (IBOC audio path, data transmission path)

5.1.4 Test D – Two interferers

Purpose: To characterize the **digital audio** and **data transmission** performance of the IBOC system in the presence of two simultaneous first adjacent channel analog inteferers, and in the presence of two simultaneous second adjacent channel IBOC interferers.

Desired results:

1) System performance in test area(s) with two simultaneous first adjacent channel interferers (at FCC limit) and low levels of multipath interference. Preferred test route(s) along path where desired signal averages close to the signal level expected at the protected contour, and interferers averages 6 dB below desired signal level.
2) Same as 1) except with moderate levels of multipath interference.
3) System performance in test area(s) with two simultaneous second adjacent channel interferers and low levels of multipath interference. Preferred test route(s) along path where interferers average 20 to 40 dB above desired signal level.
4) Same as 3) except with moderate levels of multipath interference.

Comments:

- For the first adjacent channel interference tests, it may be helpful to establish a low power station operating with special temporary authority to achieve the desired interference environment.
- For the second adjacent channel interference tests, suggest that at least one test run proceed from a low interference area into the area where intereferers are 20 to 40 dB above desired signal level.
- Suggest that D/U ratio along test route be calculated and measured, and that a comparison of these data be submitted along with results.
- For each test, objective data (*e.g.*, BER, FER, etc.) on both digital audio and data transmission paths, and impairment data (*e.g.*, TOA, POF, etc.) on digital audio and analog audio desired; refer to Appendix C for analog receiver guidelines.
- Multiple data points (BER, FER, etc.) should be collected so as to allow for performance versus carrier-to-noise ratio data plots.
- Other desired data (needed for full analysis and interpretation of results):
  - Continuous 1 MHz span spectrum plot recordings
  - Visual recording depicting the test environment
  - Digital recording of IBOC audio, analog audio
  - Digital error rate performance metric (IBOC audio path, data transmission path)

5.2 AM-band portion

5.2.1 Test A - System Calibration

Purpose: To constantly maintain IBOC system hardware and associated test equipment in a known, calibrated state, and to establish clear and complete documentation of that state; and, to establish the interference conditions, by calculation and measurement, along field test routes.

Desired results:

1) IBOC analog and digital power at transmitter output (read separately, if possible);
2) RF spectrum plot at combiner output showing shape and spectral occupancy of IBOC signal;
3) Digital audio subjective performance baseline—using "Threshold of Audibility" (TOA) or some other subjective criteria—versus AWGN or weak signal;
4) Baseline characterization of system digital performance, both digital audio and data transmission paths (BER, FER, or other similar parameter) versus AWGN or weak signal;
5) Analog transmission system test results (frequency response, distortion characteristics of analog audio channel, etc.);
6) Transmit and receive antenna and RF distribution system performance data, including specifications, installation description, swept data (vs. elevation and azimuth), etc.;
7) Calibration record of equipment used for testing;
8) Interference levels (calculated and measured) along field test routes.

Comments:

- Systems should be calibrated regularly to insure precise and accurate test data;
- Recommended spectrum analyzer settings – in accordance with FCC 73.44, with sufficient span to include 3rd order intermodulation products;
- Proponents should provide assurance that entire transmission link, from audio source to antenna, is functioning according to good engineering standards;
- Multiple data points (BER, FER, etc.) should be collected so as to allow for performance versus carrier-to-noise ratio data plots;
- Other desired data (needed for full analysis and interpretation of results):
  - Continuous spectrum plot recordings (at least 50 kHz span), to include total spectrum of 2nd adjacent channels
  - Visual recording depicting the test environment
  - Digital recording of IBOC audio, analog audio (refer to Appendix C for analog receiver guidelines)
  - Digital error rate performance metric (IBOC audio path, data transmission path)
- Calibration records should be signed and dated.

5.2.2 Test B – System performance within protected contour and low interference (day)

Purpose: To characterize the **digital audio** and **data transmission** performance of the IBOC system in a low interference environment and in an environment where fading due to ground conductive structures is the predominant form of interference; and, to characterize the **host compatibility** under these conditions.

Desired results:

1) System performance in test area(s) with low interference and low fading. Preferred test route(s) are from strong to weak desired signal.
2) Daytime system performance in test area(s) with multiple fades caused by ground conductive structures. Preferred test route(s) are from strong to weak desired signal.
3) Same as 2) except for nighttime service.
4) Impact of IBOC signal presence on host main channel audio signal (i.e. host compatibility).

Comments:

- For these tests, throughout the test area, any 1st adjacent analog signals should be at least 20 dB below the host analog signal; and, any co-channel analog signals should be at lease 30 dB below the host analog signal.
- For host compatibility tests, IBOC analog station broadcasting music and talk and using moderate processing preferred.
- For each test, objective data (*e.g.*, BER, FER, etc.) on both digital audio and data transmission paths, and impairment data (*e.g.*, TOA, POF, etc.) on digital audio and analog audio desired; refer to Appendix C for analog receiver guidelines.
- Multiple data points (BER, FER, etc.) should be collected so as to allow for performance versus carrier-to-noise ratio data plots.
- Other desired data (needed for full analysis and interpretation of results):
  - Continuous 50 kHz span spectrum plot recordings
  - Visual recording depicting the test environment
  - Digital recording of IBOC audio, analog audio
  - Digital error rate performance metric (IBOC audio path, data transmission path)

5.2.3 Test C - System performance within protected contour (day and night)

Purpose: To characterize the **digital audio** and **data transmission** performance of the IBOC system within the entire day and night contour, when subjected to 1st-adjacent channel interference and in an environment where fading due to ground conductive structures exists.

Desired results:

1) System performance over entire day coverage area, including test area(s) subject to 1st-adjacent channel interference. Preferred test route(s) are from strong to weak desired signal.
2) Same as 1) except for nighttime service (over entire night coverage area).
3) Same as 1) in test area(s) with multiple fades caused by ground conductive structures.
4) Same as 3) except for nighttime service.

Comments:

- 1st adjacent analog signals should be at least 6 dB below the desired signal at points within the day contour.
- For each test, objective data (*e.g.*, BER, FER, etc.) on both digital audio and data transmission paths, and impairment data (*e.g.*, TOA, POF, etc.) on digital audio and analog audio desired; refer to Appendix C for analog receiver guidelines.
- Multiple data points (BER, FER, etc.) should be collected so as to allow for performance versus carrier-to-noise ratio data plots.
- Other desired data (needed for full analysis and interpretation of results):
  - Continuous 50 kHz span spectrum plot recordings
  - Visual recording depicting the test environment
  - Digital recording of IBOC audio, analog audio
  - Digital error rate performance metric (IBOC audio path, data transmission path)