ORIGINAL

KELLOGG, HUBER, HANSEN, TODD & EVANS, P.L.L.C.
1301 K STREET, N.W.
SUITE 1000 WEST
WASHINGTON, D.C. 20005-3317

(202) 326-7900
FACSIMILE:
(202) 326-7999

MICHAEL K. KELLOGG
PETER W. HUBER
MARK C. HANSEN
K. CHRIS TODD
MARK L. EVANS
AUSTIN C. SCHLICK
STEVEN F. BENZ

NEIL M. GORSUCH
GEOFFREY M. KLINEBERG
REID M. FIGEL
HENK BRANDS
SEAN A. LEV
COURTNEY SIMMONS ELWOOD
EVAN T. LEO

EX PARTE OR LATE FILED

February 9, 2000

RECEIVED
FEB - 9 2000
FEDERAL COMMUNICATIONS COMMISSION
OFFICE OF THE SECRETARY

Ex Parte Submission

Magalie Roman Salas, Esq.
Secretary
Federal Communications Commission
445 12th Street, S.W.
Washington, D.C. 20554

Re: *Application of SBC Communications Inc. Pursuant to Section 271 of the Telecommunications Act of 1996 to Provide In-Region, InterLATA Services in Texas*, CC Docket No. 00-4

Dear Ms. Salas:

Enclosed for filing please find an original and one copy of the following:

(1) a "Hit or Miss Report" for the months of October, November, and December 1999, with performance data presented on a state-wide basis for Texas to the extent possible; and

(2) flow charts depicting the following:

- The order and provisioning processes for migration of SWBT POTS service to resale service;
- The order and provisioning processes for migration of SWBT retail or resale service to UNE Platform service;
- The order and provisioning processes for migration of SWBT retail or resale service to an unbundled local loop; and
- The order and provisioning processes for migration of SWBT retail or resale service to an unbundled local loop with number portability.

These materials are being provided at the direct request of Commission staff.

The Commission staff also have raised questions about Section 5.5 of the SWBT Local Service Ordering Requirements ("LSOR"), entitled "Southwestern Bell Error Codes and

0+1

Messages." The LSOR was filed under seal on January 10, 2000, as part of confidential Attachment F to the OSS Affidavit of Elizabeth Ham. In this document, "fatal" LASR edits, which SWBT's systems return to the CLEC automatically, are designated by "LSxxxx." Fatal MOG edits, which SWBT's systems return to the CLEC automatically, are designated by "SDxxxx." For errors with codes of "MRxxxx," the Local Service Center determines whether the error should be corrected or returned to the CLEC. If the error is returned to the CLEC, the LSC will input the error code "MRxxxx" and return the LSR electronically via the LASR GUI interface.

The Commission staff additionally asked for identification of "super fatal" edits that SWBT's systems reject automatically. These are:

- CC is missing;
- PON is missing;
- CC/PON match not found, SUPTYP is populated;
- SUPTYP is populated and a CC/PON match is found, and requested status is completed or canceled;
- CC not found in SWBT tables; and
- REQTYP is blank or invalid.

Processing of fatal and super fatal edits is discussed in paragraphs 137 through 150, and 170, of the Ham Affidavit.

Finally, a correction is necessary. In a Notice of Ex Parte Presentations filed yesterday by this firm, the dates of the telephone contacts should have been *February* 7 and 8, 2000, not January 7 and 8.

Please let me know if you have any questions about this matter.

Sincerely,

Austin C. Schlick

cc: Mr. Dever
Mr. Stanley
Ms. Stephens
Ms. Wright
Ms. Farroba, Texas PUC
Ms. Heisler, DOJ
ITS

Texas Aggregated Performance Measures

					Oct-99					Nov-99					Dec-99					Overall Result
			Payment Level					% Yes -	83%				% Yes -	83%				% Yes -	84%	
PM	Description	Area	Tier 1	Tier 2	CLEC	SWBT	Bench-mark	Z-Value	Result	CLEC	SWBT	Bench-mark	Z-Value	Result	CLEC	SWBT	Bench-mark	Z-Value	Result	86%
1-01	Avg Resp for OSS Pre-Order - Address Verification - DATAGATE	CO	L	M	2.1		4.7	(2.60)	Yes	3.2		4.7	(1.50)	Yes	2.7		4.7	(2.00)	Yes	HIT
1-02	Avg Resp for OSS Pre-Order - Req for Telephone Number - DATAGATE	CO	L	M	2.9		4.5	(1.60)	Yes	3.2		4.5	(1.30)	Yes	2.7		4.5	(1.80)	Yes	HIT
1-03	Avg Resp for OSS Pre-Order - Req for CSR - DATAGATE	CO	L	M	3.3		6.6	(3.30)	Yes	3.8		6.6	(2.80)	Yes	3.2		6.6	(3.40)	Yes	HIT
1-04	Avg Resp for OSS Pre-Order - Serv Availability - DATAGATE	CO	L	M	2.2		6.6	(4.40)	Yes	0.8		6.6	(5.80)	Yes	0.7		6.6	(5.90)	Yes	HIT
1-05	Avg Resp for OSS Pre-Order - Serv Appointment Scheduling - DATAGATE	CO	L	M	0.7		1.0	(0.30)	Yes	0.5		1.0	(0.50)	Yes	0.7		1.0	(0.30)	Yes	HIT
1-06	Avg Resp for OSS Pre-Order - Dispatch Required - DATAGATE	CO	L	M	8.3		12.6	(4.30)	Yes	9.4		12.6	(3.20)	Yes	8.3		12.6	(4.30)	Yes	HIT
1-07	Avg Resp for OSS Pre-Order - PIC - DATAGATE	CO	L	M	20.3		28.0	(7.70)	Yes	21.2		28.0	(6.80)	Yes	19.3		28.0	(8.70)	Yes	HIT
1-08	Avg Resp for OSS Pre-Order - Address Verification - VERIGATE	CO	L	M	5.7		4.7	0.98	Yes	5.5		4.7	0.79	Yes	4.9		4.7	0.23	Yes	HIT
1-09	Avg Resp for OSS Pre-Order - Req for Telephone Number - VERIGATE	CO	L	M	2.7		4.5	(1.80)	Yes	2.5		4.5	(2.01)	Yes	2.4		4.5	(2.09)	Yes	HIT
1-10	Avg Resp for OSS Pre-Order - Req for CSR - VERIGATE	CO	L	M	2.4		6.6	(4.16)	Yes	2.6		6.6	(3.96)	Yes	2.7		6.6	(3.92)	Yes	HIT
1-11	Avg Resp for OSS Pre-Order - Serv Availability - VERIGATE	CO	L	M	5.8		6.6	(0.84)	Yes	3.1		6.6	(3.46)	Yes	7.9		6.6	1.32	Yes	HIT
1-12	Avg Resp for OSS Pre-Order - Serv Appointment Scheduling - VERIGATE	CO	L	M	0.7		1.0	(0.33)	Yes	0.5		1.0	(0.46)	Yes	1.2		1.0	0.18	Yes	HIT
1-13	Avg Resp for OSS Pre-Order - Dispatch Required - VERIGATE	CO	L	M	4.8		12.6	(7.85)	Yes	8.6		12.6	(3.97)	Yes	5.8		12.6	(6.85)	Yes	HIT
1-14	Avg Resp for OSS Pre-Order - PIC - VERIGATE	CO	L	M	18.9		0.0	n/a	-	19.2		0.0	n/a	-	18.2		0.0	n/a	-	-
2-01	Avg Resp Rec within "x" sec - Address Verification - DATAGATE	CO	L	M	99.6%		95.0%	(4.60)	Yes	98.6%		95.0%	(3.60)	Yes	97.2%		95.0%	(2.20)	Yes	HIT
2-02	Avg Resp Rec within "x" sec - Req for Telephone Number - DATAGATE	CO	L	M	99.1%		95.0%	(4.10)	Yes	98.6%		95.0%	(3.60)	Yes	99.6%		95.0%	(4.60)	Yes	HIT
2-03	Avg Resp Rec within "x" sec - Req for CSR - DATAGATE	CO	L	M	99.3%		95.0%	(4.30)	Yes	99.1%		95.0%	(4.10)	Yes	99.7%		95.0%	(4.70)	Yes	HIT
2-04	Avg Resp Rec within "x" sec - Service Availability - DATAGATE	CO	L	M	98.0%		95.0%	(3.00)	Yes	99.9%		95.0%	(4.90)	Yes	100.0%		95.0%	(5.00)	Yes	HIT
2-05	Avg Resp Rec within "x" sec - Serv Appointment Scheduling - DATAGATE	CO	L	M	98.6%		95.0%	(3.60)	Yes	98.8%		95.0%	(3.80)	Yes	98.4%		95.0%	(3.40)	Yes	HIT
2-06	Avg Resp Rec within "x" sec - Dispatch Required - DATAGATE	CO	L	M	99.8%		95.0%	(4.80)	Yes	99.8%		95.0%	(4.80)	Yes	99.9%		95.0%	(4.90)	Yes	HIT
2-07	Avg Resp Rec within "x" sec - PIC - DATAGATE	CO	L	M	99.3%		95.0%	(4.30)	Yes	99.1%		95.0%	(4.10)	Yes	99.8%		95.0%	(4.80)	Yes	HIT
2-08	Avg Resp Rec within "x" sec - Address Verification - VERIGATE	CO	L	M	83.0%		90.0%	7.04	No	85.8%		90.0%	4.25	No	86.6%		90.0%	3.38	No	MISS
2-09	Avg Resp Rec within "x" sec - Req for Telephone Number - VERIGATE	CO	L	M	79.1%		80.0%	0.87	Yes	80.0%		80.0%	0.02	Yes	81.2%		80.0%	(1.17)	Yes	HIT
2-10	Avg Resp Rec within "x" sec - Req for CSR - VERIGATE	CO	L	M	99.4%		90.0%	(9.38)	Yes	98.5%		90.0%	(8.49)	Yes	98.4%		90.0%	(8.44)	Yes	HIT
2-11	Avg Resp Rec within "x" sec - Service Availability - VERIGATE	CO	L	M	97.4%		90.0%	(7.35)	Yes	97.9%		90.0%	(7.85)	Yes	98.4%		90.0%	(8.41)	Yes	HIT
2-12	Avg Resp Rec within "x" sec - Service Appointment Scheduling - VERIGATE	CO	L	M	99.4%		90.0%	(9.40)	Yes	99.0%		90.0%	(9.01)	Yes	98.1%		90.0%	(8.06)	Yes	HIT
2-13	Avg Resp Rec within "x" sec - Dispatch Required - VERIGATE	CO	L	M	100.0%		90.0%	(10.00)	Yes	97.2%		90.0%	(7.20)	Yes	99.0%		90.0%	(8.96)	Yes	HIT
2-14	Avg Resp Rec within "x" sec - PIC - VERIGATE	CO	L	M	n/a		0.0%	n/a	-	n/a		0.0%	n/a	-	n/a		0.0%	n/a	-	-
3-01	EASE Average Response Time	TX	-	-	1.01	1.14		0.00	Yes	0.71	0.74		0.00	Yes	0.58	0.64		0.00	Yes	HIT
4-01.1	OSS Interface Availability - DATAGATE	CO	-	H	100.0%		99.5%	(0.50)	Yes	100.0%		99.5%	(0.50)	Yes	99.7%		99.5%	(0.20)	Yes	HIT
4-01.2	OSS Interface Availability - VERIGATE	CO	-	H	100.0%		99.5%	(0.50)	Yes	100.0%		99.5%	(0.50)	Yes	100.0%		99.5%	(0.50)	Yes	HIT
4-01.3	OSS Interface Availability - LEX	CO	-	H	99.9%		99.5%	(0.40)	Yes	100.0%		99.5%	(0.50)	Yes	99.9%		99.5%	(0.40)	Yes	HIT
4-01.4	OSS Interface Availability - EDI	CO	-	H	100.0%		99.5%	(0.50)	Yes	100.0%		99.5%	(0.50)	Yes	100.0%		99.5%	(0.50)	Yes	HIT
4-01.5	OSS Interface Availability - TOOLBAR	CO	-	H	100.0%		99.5%	(0.50)	Yes	100.0%		99.5%	(0.50)	Yes	100.0%		99.5%	(0.50)	Yes	HIT
4-01.6	OSS Interface Availability - TRAF	CO	-	H	100.0%		99.5%	(0.50)	Yes	100.0%		99.5%	(0.50)	Yes	100.0%		99.5%	(0.50)	Yes	HIT
4-02	Consumer EASE Availability	TX	-	H	100.0%		99.5%	0.00	Yes	100.0%		99.5%	0.00	Yes	100.0%		99.5%	0.00	Yes	HIT
4-03	Business EASE Availability	TX	-	H	100.0%		99.5%	0.00	Yes	100.0%		99.5%	0.00	Yes	100.0%		99.5%	0.00	Yes	HIT
5-01	% FOCs Rec Within "X" Hours - Residence and Simple Business - LEX	TX	L	M	93.9%		95.0%	1.13	Yes	95.8%		95.0%	(0.84)	Yes	98.3%		95.0%	(3.26)	Yes	HIT
5-02	% FOCs Rec Within "X" Hours - Complex Business (1 - 200 Lines) - LEX	TX	L	M	88.8%		94.0%	5.21	No	93.4%		94.0%	0.59	Yes	98.2%		94.0%	(4.20)	Yes	HIT
5-03	% FOCs Rec Within "X" Hours - Complex Business (200+ Lines) - LEX	TX	L	M	n/a		94.0%	Base < 10	-	n/a		94.0%	Base < 10	-	n/a		94.0%	Base < 10	-	-
5-04	% FOCs Rec Within "X" Hours - UNE Loop (1-50) - LEX	TX	L	M	90.1%		95.0%	4.87	No	94.2%		95.0%	0.82	Yes	97.5%		95.0%	(2.53)	Yes	HIT
5-05	% FOCs Rec Within "X" Hours - UNE Loop (50 +) - LEX	TX	L	M	n/a		94.0%	Base < 10	-	n/a		94.0%	Base < 10	-	n/a		94.0%	Base < 10	-	-
5-06	% FOCs Rec Within "X" Hours - Switch Ports - LEX	TX	L	M	n/a		95.0%	Base < 10	-	n/a		95.0%	Base < 10	-	100.0%		95.0%	Base < 10	-	-
5-07	% FOCs Rec Within "X" Hours - Residence and Simple Business - EDI	TX	L	M	99.1%		95.0%	(4.06)	Yes	99.8%		95.0%	(4.77)	Yes	97.4%		95.0%	(2.42)	Yes	HIT
5-08	% FOCs Rec Within "X" Hours - Complex Business (1 - 200 Lines) - EDI	TX	L	M	n/a		94.0%	Base < 10	-	n/a		94.0%	Base < 10	-	n/a		94.0%	Base < 10	-	-
5-09	% FOCs Rec Within "X" Hours - Complex Business (200+ Lines) - EDI	TX	L	M	n/a		94.0%	Base < 10	-	n/a		94.0%	Base < 10	-	n/a		94.0%	Base < 10	-	-
5-10	% FOCs Rec Within "X" Hours - UNE Loop (1-50) - EDI	TX	L	M	88.1%		95.0%	6.86	No	92.7%		95.0%	2.26	No	85.8%		95.0%	9.17	No	MISS
5-11	% FOCs Rec Within "X" Hours - UNE Loop (50 +) - EDI	TX	L	M	n/a		94.0%	Base < 10	-	n/a		94.0%	Base < 10	-	n/a		94.0%	Base < 10	-	-
5-12	% FOCs Rec Within "X" Hours - Switch Ports - EDI	TX	L	M	n/a		95.0%	Base < 10	-	n/a		95.0%	Base < 10	-	n/a		95.0%	Base < 10	-	-
5-13	% FOCs Rec Within "X" Hours - Residence and Simple Business - Man	TX	L	M	96.4%		95.0%	(1.38)	Yes	97.1%		95.0%	(2.07)	Yes	97.0%		95.0%	(1.95)	Yes	HIT
5-14	% FOCs Rec Within "X" Hours - Complex Business (1 - 200 Lines) - Man	TX	L	M	83.9%		94.0%	10.11	No	87.9%		94.0%	6.13	No	96.2%		94.0%	(2.19)	Yes	MISS
5-15	% FOCs Rec Within "X" Hours - Complex Business (200+ Lines) - Man	TX	L	M	n/a		94.0%	Base < 10	-	n/a		94.0%	Base < 10	-	n/a		94.0%	Base < 10	-	-
5-16	% FOCs Rec Within "X" Hours - UNE Loop (1-50) - Man	TX	L	M	88.7%		95.0%	6.28	No	80.7%		95.0%	14.26	No	94.9%		95.0%	0.15	Yes	MISS
5-17	% FOCs Rec Within "X" Hours - UNE Loop (50 +) - Man	TX	L	M	n/a		94.0%	Base < 10	-	n/a		94.0%	Base < 10	-	n/a		94.0%	Base < 10	-	-
5-18	% FOCs Rec Within "X" Hours - Switch Ports - Man	TX	L	M	87.0%		94.0%	7.03	No	74.2%		94.0%	19.81	No	36.4%		94.0%	57.64	No	MISS
6-01	Average Time to Return FOC (Hours) - Residence and Simple Business - LEX	TX	-	-	2.0			n/a	-	1.4			n/a	-	1.2			n/a	-	-
6-02	Average Time to Return FOC (Hours) - Complex Business (1 - 200 Lines) - LEX	TX	-	-	10.6			n/a	-	6.5			n/a	-	4.3			n/a	-	-

Texas Aggregated Performance Measures

PM	Description	Area	Payment Level Tier 1	Payment Level Tier 2	Oct-99 CLEC	Oct-99 SWBT	Oct-99 Bench-mark	Oct-99 Z-Value	Oct-99 Result (% Yes - 83%)	Nov-99 CLEC	Nov-99 SWBT	Nov-99 Bench-mark	Nov-99 Z-Value	Nov-99 Result (% Yes - 83%)	Dec-99 CLEC	Dec-99 SWBT	Dec-99 Bench-mark	Dec-99 Z-Value	Dec-99 Result (% Yes - 84%)	Overall Result 86%
6-03	Average Time to Return FOC (Hours) - Complex Business (200+ Lines) - LEX	TX	-	-	n/a			n/a	-	n/a			n/a	-	n/a			n/a	-	-
6-04	Average Time to Return FOC (Hours) - UNE Loop (1-50) - LEX	TX	-	-	2.1			n/a	-	1.3			n/a	-	0.9			n/a	-	-
6-05	Average Time to Return FOC (Hours) - UNE Loop (50 +) - LEX	TX	-	-	n/a			n/a	-	n/a			n/a	-	n/a			n/a	-	-
6-06	Average Time to Return FOC (Hours) - Switch Ports - LEX	TX	-	-	n/a			n/a	-	n/a			n/a	-	0.2			n/a	-	-
6-07	Average Time to Return FOC (Hours) - Residence and Simple Business - EDI	TX	-	-	0.6			n/a	-	1.3			n/a	-	0.7			n/a	-	-
6-08	Average Time to Return FOC (Hours) - Complex Business (1 - 200 Lines) - EDI	TX	-	-	n/a			n/a	-	n/a			n/a	-	n/a			n/a	-	-
6-09	Average Time to Return FOC (Hours) - Complex Business (200+ Lines) - EDI	TX	-	-	n/a			n/a	-	n/a			n/a	-	n/a			n/a	-	-
6-10	Average Time to Return FOC (Hours) - UNE Loop (1-50) - EDI	TX	-	-	2.1			n/a	-	5.7			n/a	-	2.4			n/a	-	-
6-11	Average Time to Return FOC (Hours) - UNE Loop (50 +) - EDI	TX	-	-	n/a			n/a	-	n/a			n/a	-	n/a			n/a	-	-
6-12	Average Time to Return FOC (Hours) - Switch Ports - EDI	TX	-	-	n/a			n/a	-	n/a			n/a	-	n/a			n/a	-	-
6-13	Average Time to Return FOC (Hours) - Residence and Simple Business - Man	TX	-	-	18.2			n/a	-	19.5			n/a	-	14.5			n/a	-	-
6-14	Average Time to Return FOC (Hours) - Complex Business (1 - 200 Lines) - Man.	TX		-	45.9			n/a	-	38.8			n/a		20.3			n/a		-
6-15	Average Time to Return FOC (Hours) - Complex Business (200+ Lines) - Man	TX	-	-	n/a			n/a	-	n/a			n/a	-	n/a			n/a	-	-
6-16	Average Time to Return FOC (Hours) - UNE Loop (1-50) - Man	TX	-	-	37.2			n/a	-	23.6			n/a	-	42.9			n/a	-	-
6-17	Average Time to Return FOC (Hours) - UNE Loop (50 +) - Man	TX	-	-	n/a			n/a	-	n/a			n/a	-	n/a			n/a	-	-
6-18	Average Time to Return FOC (Hours) - Switch Ports - Man	TX	-	-	68.6			n/a	-	47.6			n/a	-	148.7			n/a	-	-
7-01	% Mech. Comp.s Returned with One Hour - LEX	TX	L	-	100.0%		97.0%	(2.99)	Yes	100.0%		97.0%	(3.00)	Yes	99.9%		97.0%	(2.94)	Yes	HIT
7-02	% Mech. Comp.s Returned with One Hour - EDI	TX	L	-	99.8%		97.0%	(2.78)	Yes	99.9%		97.0%	(2.85)	Yes	99.8%		97.0%	(2.78)	Yes	HIT
7.1-01	% Mech. Comp.s Returned Within One Day - LEX	TX	-	-	86.1%		97.0%	10.88	No	84.8%		97.0%	12.19	No	87.5%		97.0%	9.51	No	MISS
7.1-02	% Mech. Comp.s Returned Within One Day - EDI	TX	-	-	96.5%		97.0%	0.53	Yes	96.8%		97.0%	0.19	Yes	97.1%		97.0%	(0.07)	Yes	HIT
8-01	Average Time to Return Mechanized Completions (Hours) - LEX	TX	L	-	0.02			n/a	-	0.02			n/a	-	0.03			n/a	-	
8-02	Average Time to Return Mechanized Completions (Hours) - EDI	TX	L	-	0.36			n/a	-	0.15			n/a	-	0.16			n/a	-	-
9-01	Percent Rejects - LEX	CO	-	-	42.8%			n/a	-	36.4%			n/a	-	37.2%			n/a	-	
9-02	Percent Rejects - EDI	CO	-	-	24.0%			n/a	-	30.7%			n/a	-	25.0%			n/a	-	-
10-01	% Mech. Rejects Ret. with One Hour of Batch Process - LEX	CO	L	-	100.0%		97.0%	(3.00)	Yes	99.8%		97.0%	(2.85)	Yes	100.0%		97.0%	(2.95)	Yes	HIT
10-02	% Mech. Rejects Ret. with One Hour of Batch Process - EDI	CO	L	-	99.7%		97.0%	(2.74)	Yes	100.0%		97.0%	(3.00)	Yes	100.0%		97.0%	(2.98)	Yes	HIT
10.1-01	% Manual Rejects Received and Returned Within Five Hours	CO	L	-	59.5%		97.0%	37.48	No	65.1%		97.0%	31.93	No	69.5%		97.0%	27.55	No	MISS
11-01	Mean Time to Return Mechanized Rejects (Hours) - LEX	CO	-	-	0.43			n/a	-	0.36			n/a	-	0.37			n/a	-	-
11-02	Mean Time to Return Mechanized Rejects (Hours) - EDI	CO	-	-	0.24			n/a	-	0.31			n/a	-	0.25			n/a	-	-
11.1-01	Mean Time to Return Manual Rejects Received via LEX or EDI	CO	-	-	10.1		5.0	5.10	No	14.9		5.0	9.94	No	35.7		5.0	30.65	No	MISS
12-01	Mechanized Provisioning Accuracy	CO	L	L	99.2%	92.6%		(74.94)	Yes	98.1%	92.3%		(59.32)	Yes	95.1%	94.1%		(11.71)	Yes	HIT
13-01	Order Process % Flow Through - EASE	CO	L	H	97.8%	91.0%		(64.68)	Yes	97.6%	91.3%		(54.26)	Yes	98.2%	92.0%		(61.02)	Yes	HIT
13-02	Order Process % Flow Through - LEX	CO	L	H	87.5%	91.0%		18.35	No	88.0%	91.3%		18.56	No	88.3%	92.0%		21.84	No	MISS
13-03	Order Process % Flow Through - EDI	CO	L	H	97.6%	91.0%		(50.17)	Yes	96.3%	91.3%		(36.52)	Yes	98.2%	92.0%		(51.76)	Yes	HIT
14-01	Billing Accuracy - CRIS Usage Bill Audit	CO	-	-	0.00%	0.18%		(1.52)	Yes	0.00%	0.11%		(1.21)	Yes	0.00%	0.04%		(0.84)	Yes	HIT
14-02	Billing Accuracy - CABS Usage Bill Audit	CO		-	0.00%	0.00%		0.00	Yes	0.00%	0.00%		0.00	Yes	0.00%	0.00%		0.00	Yes	HIT
14-03	Billing Accuracy - CRIS Bill Audit	CO	-	-	0.33%	0.03%		2.79	No	0.00%	0.00%		0.00	Yes	0.00%	0.00%		0.00	Yes	HIT
15-01	% of Accurate and Complete Formatted Mech. Bills	CO	L	H	100.0%		99.0%	(1.00)	Yes	100.0%		99.0%	(1.00)	Yes	99.9%		99.0%	(0.85)	Yes	HIT
16-01	% of Billing Records Transmitted Correctly	CO	L	-	100.0%		95.0%	(5.00)	Yes	100.0%		95.0%	(5.00)	Yes	100.0%		95.0%	(5.00)	Yes	HIT
17-01	Billing Completeness	CO	L	M	98.0%	99.2%		60.51	No	98.1%	98.7%		24.21	No	98.1%	98.8%		27.73	No	MISS
18-01	Billing Timeliness	CO	L	H	94.6%		95.0%	0.36	Yes	76.4%		95.0%	18.65	No	76.3%		95.0%	18.68	No	MISS
19-01	Daily Usage Feed Timeliness	CO	-	-	97.4%		95.0%	(2.36)	Yes	93.6%		95.0%	1.37	Yes	97.1%		95.0%	(2.15)	Yes	HIT
20-01	Percent Unbillable Usage - CRIS (AMA/ECS)	CO	-	-	0.16%			n/a	-	0.05%			n/a	-	0.10%			n/a	-	
20-02	Percent Unbillable Usage - CABS	CO	-	-	0.06%			n/a	-	0.03%			n/a	-	0.04%			n/a	-	-
21-01	LSC Average Speed of Answer (SOA) - Seconds - Dallas	CO	-	-	4.0	15.2		(11.21)	Yes	5.0	18.7		(13.66)	Yes	5.0	13.6		(8.56)	Yes	HIT
21-02	LSC Average Speed of Answer (SOA) - Seconds - Alliance	CO	-	-	6.0	15.2		(9.21)	Yes	6.0	18.7		(12.66)	Yes	6.0	13.6		(7.56)	Yes	HIT
22-01	LSC Grade of Service (GOS) - Dallas	CO	-	H	99.0%	86.5%		(36.68)	Yes	96.8%	84.3%		(34.80)	Yes	97.2%	90.7%		(23.91)	Yes	HIT
22-02	LSC Grade of Service (GOS) - Alliance	CO	-	H	97.1%	86.5%		(55.92)	Yes	97.6%	84.3%		(66.78)	Yes	96.6%	90.7%		(37.74)	Yes	HIT
23-01	% Busy in the LSC - Dallas	CO	-	L	0.0%	9.2%		(31.94)	Yes	0.0%	15.0%		(42.61)	Yes	0.0%	5.6%		(26.04)	Yes	HIT
23-02	% Busy in the LSC - Alliance	CO	-	L	0.0%	9.2%		(57.52)	Yes	0.0%	15.0%		(76.87)	Yes	0.0%	5.6%		(45.38)	Yes	HIT
24-01	LOC Average Speed of Answer (SOA) - Seconds	CO	-	-	11.0	7.9		3.10	No	10.4	7.5		2.90	No	12.0	16.0		(4.00)	Yes	MISS
25-01	LOC Grade of Service	CO	-	H	91.4%	90.8%		(4.23)	Yes	90.6%	91.7%		8.14	No	87.2%	84.0%		(19.26)	Yes	HIT
26-01	% Busy in the LOC	CO	-	L	0.0%	0.2%		(8.24)	Yes	0.0%	0.3%		(11.22)	Yes	0.0%	0.1%		(7.74)	Yes	HIT
27-01	Mean Install. Interval-Field Work-Res.	TX	H	H	2.5	3.4		(12.22)	Yes	2.6	3.4		(11.42)	Yes	2.9	3.6		(10.79)	Yes	HIT
27-02	Mean Install. Interval-Field Work-Bus.	TX	H	H	2.9	3.7		(4.59)	Yes	3.3	3.7		(2.30)	Yes	3.7	3.6		0.42	Yes	HIT
27-03	Mean Install. Interval-No Field Work-Res.	TX	H	H	0.1	0.5		(55.51)	Yes	0.1	0.5		(49.53)	Yes	0.1	0.5		(62.91)	Yes	HIT
27-04	Mean Install. Interval-No Field Work-Bus.	TX	H	H	0.1	0.8		(7.29)	Yes	0.1	0.8		(11.83)	Yes	0.1	0.7		(7.32)	Yes	HIT

Texas Aggregated Performance Measures

			Payment Level		Oct-99					Nov-99					Dec-99					Overall Result
								% Yes -	83%				% Yes -	83%				% Yes	84%	
PM	Description	Area	Tier 1	Tier 2	CLEC	SWBT	Bench mark	Z-Value	Result	CLEC	SWBT	Bench-mark	Z-Value	Result	CLEC	SWBT	Bench-mark	Z-Value	Result	86%
27-05	Mean Install Interval Field Work-UNEs	TX	H	H	3.1	3.5		(1.89)	Yes	3.1	3.5		(1.95)	Yes	3.1	3.6		(3.61)	Yes	HIT
27-06	Mean Install Interval-No Field Work- UNEs	TX	H	H	0.1	0.5		(13.46)	Yes	0.2	0.6		(12.89)	Yes	0.2	0.5		(16.42)	Yes	HIT
28-01	% Install within 5 days-Field Work-Res	TX	-	-	96.5%	91.6%		(10.26)	Yes	96.9%	92.4%		(9.69)	Yes	95.7%	91.2%		(9.07)	Yes	HIT
28-02	% Install within 5 days-Field Work-Bus	TX	-	-	94.7%	88.1%		(6.45)	Yes	91.6%	89.6%		(2.05)	Yes	89.3%	88.9%		(0.43)	Yes	HIT
28-03	% Install within 3 days-No Field Work-Res	TX	-	-	100.0%	98.9%		(17.16)	Yes	100.0%	98.7%		(17.32)	Yes	100.0%	98.2%		(24.77)	Yes	HIT
28-04	% Install within 3 days-No Field Work-Bus	TX	-	-	100.0%	97.2%		(5.97)	Yes	100.0%	96.3%		(7.91)	Yes	100.0%	97.2%		(5.80)	Yes	HIT
28-05	% Install within 5 days-Field Work-UNEs	TX	-	-	97.5%	90.5%		(5.72)	Yes	97.2%	91.6%		(5.14)	Yes	98.2%	90.6%		(7.83)	Yes	HIT
28-06	% Install within 3 days-No Field Work- UNEs	TX	-	-	100.0%	98.6%		(6.40)	Yes	100.0%	98.3%		(8.00)	Yes	100.0%	98.0%		(9.65)	Yes	HIT
29-01	% SWBT Missed Due Dates - Field Work-Res	TX	H	H	8.7%	12.4%		(6.96)	Yes	7.1%	11.6%		(8.52)	Yes	8.1%	12.2%		(7.84)	Yes	HIT
29-02	% SWBT Missed Due Dates - Field Work-Bus	TX	H	H	8.6%	9.3%		(0.95)	Yes	8.8%	9.3%		(0.50)	Yes	11.8%	9.8%		2.30	No	HIT
29-03	% SWBT Missed Due Dates - No Field Work-Res	TX	H	H	0.1%	0.3%		(10.10)	Yes	0.1%	0.3%		(11.03)	Yes	0.1%	0.3%		(9.72)	Yes	HIT
29-04	% SWBT Missed Due Dates - No Field Work-Bus	TX	H	H	0.1%	0.2%		(2.69)	Yes	0.1%	0.2%		(2.11)	Yes	0.1%	0.2%		(2.19)	Yes	HIT
29-05	% SWBT Missed Due Dates - Field Work-UNEs	TX	H	H	2.2%	11.4%		(8.24)	Yes	3.1%	10.8%		(7.57)	Yes	2.7%	11.5%		(9.39)	Yes	HIT
29-06	% SWBT Missed Due Dates - No Field Work-UNEs	TX	H	H	0.0%	0.3%		(8.15)	Yes	0.0%	0.3%		(6.32)	Yes	0.0%	0.2%		(6.78)	Yes	HIT
30-01	% SWBT Missed Due Dates Due to LOF - Res	TX	L	-	6.3%	8.5%		(4.97)	Yes	5.5%	8.0%		(5.67)	Yes	6.5%	8.5%		(4.33)	Yes	HIT
30-02	% SWBT Missed Due Dates Due to LOF - Bus	TX	L	-	7.5%	7.0%		0.77	Yes	7.4%	7.2%		0.29	Yes	10.7%	7.3%		4.50	No	HIT
30-03	% SWBT Missed Due Dates Due to LOF - UNEs	TX	L	-	1.7%	8.0%		(6.61)	Yes	1.9%	7.7%		(6.67)	Yes	1.7%	8.1%		(7.97)	Yes	HIT
30-04	% SWBT Missed Due Dates Due to LOF - Res > than 30 Days	TX	L	-	5.1%	9.0%		(2.13)	Yes	4.8%	7.0%		(1.23)	Yes	2.7%	6.4%		(2.43)	Yes	HIT
30-05	% SWBT Missed Due Dates Due to LOF - Bus > than 30 Days	TX	L	-	4.3%	12.5%		(2.40)	Yes	18.7%	11.1%		2.23	No	11.5%	11.2%		0.08	Yes	HIT
30-06	% SWBT Missed Due Dates Due to LOF - UNEs > than 30 Days	TX	L	-	0.0%	10.0%		(1.25)	Yes	5.9%	8.2%		(0.35)	Yes	0.0%	7.6%		(1.29)	Yes	HIT
30-07	% SWBT Missed Due Dates Due to LOF - Res > than 90 Days	TX	L	-	0.4%	0.4%		(0.06)	Yes	0.0%	0.4%		(0.97)	Yes	0.0%	0.4%		(0.98)	Yes	HIT
30-08	% SWBT Missed Due Dates Due to LOF - Bus > than 90 Days	TX	L	-	1.1%	1.3%		(0.20)	Yes	0.0%	0.7%		(0.80)	Yes	0.0%	0.5%		(0.80)	Yes	HIT
30-09	% SWBT Missed Due Dates Due to LOF - UNEs > than 90 Days	TX	L	-	0.0%	0.7%		(0.31)	Yes	0.0%	0.5%		(0.30)	Yes	0.0%	0.4%		(0.28)	Yes	HIT
31-01	Avg Delay Days due to LOF - Res	TX	-	-	7.1	11.2		(4.38)	Yes	7.3	10.1		(2.84)	Yes	6.1	9.8		(4.28)	Yes	HIT
31-02	Avg Delay Days due to LOF - Bus	TX	-	-	9.2	13.6		(2.26)	Yes	12.5	12.9		(0.27)	Yes	13.8	12.7		0.76	Yes	HIT
31-03	Avg Delay Days due to LOF - UNEs	TX	-	-	8.2	11.9		(0.86)	Yes	10.6	10.9		(0.07)	Yes	5.0	10.6		(1.74)	Yes	HIT
32-01	Avg Delay Days for SWBT Caused Missed Due Dates - Res Field Work	TX	M	-	6.1	5.8		0.39	Yes	7.0	5.8		0.97	Yes	8.0	6.8		0.56	Yes	HIT
32-02	Avg Delay Days for SWBT Caused Missed Due Dates - Bus -Field Work	TX	M	-	4.0	9.1		(1.01)	Yes	3.2	9.3		(1.28)	Yes	8.5	8.7		(0.04)	Yes	HIT
32-03	Avg Delay Days for SWBT Caused Missed Due Dates - Res.-No Field Work	TX	M	-	3.4	5.1		(1.80)	Yes	3.9	5.6		(0.93)	Yes	12.6	8.0		1.05	Yes	HIT
32-04	Avg Delay Days for SWBT Caused Missed Due Dates - Bus -No Field Work	TX	M	-	8.5	40.3		Base < 10	-	5.2	26.0		Base < 10		5.5	23.7		Base < 10		-
32-05	Avg Delay Days for SWBT Caused Missed Due Dates - UNEs-Field Work	TX	M	-	4.8	6.5		Base < 10	-	6.5	6.6		(0.01)	Yes	7.1	7.2		(0.02)	Yes	HIT
32-06	Avg Delay Days for SWBT Caused Missed Due Dates - UNEs-No Field Work	TX	M	-	n/a	9.2		Base < 10	-	7.4	7.3		Base < 10		2.3	9.5		Base < 10		-
33-01	% SWBT Caused Missed Due Dates > 30 Days - Res -Field Work	TX	L	-	0.3%	0.8%		(3.37)	Yes	0.3%	0.6%		(2.38)	Yes	0.2%	0.6%		(3.04)	Yes	HIT
33-02	% SWBT Caused Missed Due Dates > 30 Days - Bus -Field Work	TX	L	-	0.3%	1.0%		(2.38)	Yes	1.4%	0.9%		1.81	No	1.2%	0.9%		1.30	Yes	HIT
33-03	% SWBT Caused Missed Due Dates > 30 Days - Res -No Field Work	TX	L	-	0.0%	0.0%		(1.70)	Yes	0.0%	0.0%		(1.12)	Yes	0.0%	0.0%		(1.90)	Yes	HIT
33-04	% SWBT Caused Missed Due Dates > 30 Days - Bus -No Field Work	TX	L	-	0.0%	0.1%		(2.48)	Yes	0.0%	0.0%		(1.92)	Yes	0.0%	0.0%		(1.52)	Yes	HIT
33-05	% SWBT Caused Missed Due Dates > 30 Days - UNEs-Field Work	TX	L	-	0.0%	0.9%		(2.67)	Yes	0.1%	0.7%		(2.10)	Yes	0.1%	0.7%		(2.39)	Yes	HIT
33-06	% SWBT Caused Missed Due Dates > 30 Days - UNEs-No Field Work	TX	L	-	0.0%	0.0%		(1.77)	Yes	0.0%	0.0%		(1.36)	Yes	0.0%	0.0%		(1.66)	Yes	HIT
35-01	% Trouble Reports Within 10 Days of Install - Res -N&T Orders-Field Work	TX	H	H	4.5%	4.7%		(0.77)	Yes	5.0%	4.6%		1.01	Yes	4.2%	4.4%		(0.80)	Yes	HIT
35-02	% Trouble Reports Within 10 Days of Install - Bus -N&T Orders -Field Work	TX	H	H	2.2%	2.8%		(1.32)	Yes	2.3%	2.7%		(0.84)	Yes	1.8%	2.4%		(1.46)	Yes	HIT
35-03	% Trouble Reports Within 10 Days of Install - Res -N&T Orders -No Field Work	TX	H	H	6.0%	7.0%		(5.19)	Yes	5.3%	7.1%		(8.67)	Yes	5.5%	7.6%		(9.81)	Yes	HIT
35-04	% Trouble Reports Within 10 Days of Install - Bus -N&T Orders -No Field Work	TX	H	H	0.6%	3.9%		(10.17)	Yes	0.4%	3.5%		(10.69)	Yes	0.5%	4.3%		(10.14)	Yes	HIT
35-05	% Trouble Reports Within 10 Days of Install - Res -C Orders-Field Work	TX	H	H	6.9%	4.7%		0.70	Yes	3.2%	4.6%		(0.51)	Yes	0.0%	4.4%		(1.59)	Yes	HIT
35-06	% Trouble Reports Within 10 Days of Install - Bus -C Orders -Field Work	TX	H	H	5.7%	2.5%		1.71	No	5.4%	2.6%		1.30	Yes	6.8%	2.5%		1.79	No	MISS
35-07	% Trouble Reports Within 10 Days of Install - Res -C Orders-No Field Work	TX	H	H	0.5%	1.2%		(13.81)	Yes	0.6%	1.2%		(11.82)	Yes	0.5%	1.2%		(12.30)	Yes	HIT
35-08	% Trouble Reports Within 10 Days of Install - Bus -C Orders-No Field Work	TX	H	H	1.1%	1.5%		(2.14)	Yes	2.1%	1.4%		3.78	No	1.9%	1.5%		2.00	No	MISS
35-09	% Trouble Reports Within 10 Days of Install - UNE-N&T Orders-Field Work	TX	H	H	n/a	4.1%		Base < 10	-	n/a	4.0%		Base < 10	-	n/a	3.9%		Base < 10		-
35-10	% Trouble Reports Within 10 Days of Install - UNE-N&T Orders -No Field Work	TX	H	H	0.0%	6.7%		Base < 10	-	n/a	6.8%		Base < 10	-	n/a	7.3%		Base < 10	-	-
35-11	% Trouble Reports Within 10 Days of Install - UNE-C Orders-Field Work	TX	H	H	0.0%	2.6%		(5.22)	Yes	0.0%	2.4%		(4.77)	Yes	0.0%	2.3%		(5.19)	Yes	HIT
35-12	% Trouble Reports Within 10 Days of Install - UNE-C Orders-No Field Work	TX	H	H	1.8%	1.3%		7.65	No	1.6%	1.2%		5.37	No	1.9%	1.2%		9.59	No	MISS
36-01	% No Access - Field Work - Res.	TX	-	-	3.1%	3.6%		(1.54)	Yes	2.9%	3.3%		(1.58)	Yes	3.3%	3.2%		0.35	Yes	HIT
36-02	% No Access - Field Work - Bus	TX	-	-	3.3%	2.2%		2.64	No	1.9%	2.4%		(1.15)	Yes	2.5%	2.4%		0.18	Yes	HIT
36-03	% No Access - Field Work - UNEs	TX	-	-	0.1%	3.1%		(4.92)	Yes	1.1%	3.0%		(3.42)	Yes	0.3%	2.9%		(5.21)	Yes	HIT
37-01	Trouble Report Rate - Res.	TX	H	H	2.5%	2.4%		3.57	No	2.3%	2.3%		1.94	No	2.4%	2.4%		1.03	Yes	MISS
37-02	Trouble Report Rate - Bus	TX	H	H	0.8%	1.3%		(19.20)	Yes	0.8%	1.2%		(17.02)	Yes	0.8%	1.2%		(16.11)	Yes	HIT
37-03	Trouble Report Rate - UNE Loop and Port Combinations	TX	H	H	2.2%	2.1%		2.49	No	2.0%	1.9%		0.85	Yes	2.1%	2.0%		2.28	No	MISS
38-01	% Missed Repair - Res -Dispatch	TX	H	H	5.2%	6.7%		(4.19)	Yes	5.6%	6.4%		(2.07)	Yes	4.8%	7.2%		(6.56)	Yes	HIT

Texas Aggregated Performance Measures

					Oct-99					Nov-99					Dec-99					Overall Result
			Payment Level					% Yes -	83%				% Yes -	83%				% Yes -	84%	
PM	Description	Area	Tier 1	Tier 2	CLEC	SWBT	Bench-mark	Z-Value	Result	CLEC	SWBT	Bench-mark	Z-Value	Result	CLEC	SWBT	Bench-mark	Z-Value	Result	86%
38-02	% Missed Repair - Bus -Dispatch	TX	H	H	9.4%	12.9%		(4.17)	Yes	10.6%	12.0%		(1.71)	Yes	7.6%	13.3%		(6.75)	Yes	HIT
38-03	% Missed Repair - Res -No Dispatch	TX	H	H	2.7%	2.1%		0.65	Yes	2.6%	1.5%		1.34	Yes	1.1%	1.6%		(0.71)	Yes	HIT
38-04	% Missed Repair - Bus -No Dispatch	TX	H	H	8.1%	6.4%		0.52	Yes	5.8%	3.9%		0.78	Yes	5.4%	4.5%		0.39	Yes	HIT
38-05	% Missed Repair - UNEs- Dispatch	TX	H	H	9.8%	7.9%		3.60	No	10.2%	7.4%		5.50	No	10.1%	8.3%		3.79	No	MISS
38-06	% Missed Repair - UNEs- No Dispatch	TX	H	H	4.1%	2.6%		1.56	Yes	2.8%	1.8%		1.40	Yes	2.2%	1.9%		0.42	Yes	HIT
39-01	Receipt to Clear Duration - Res -Affecting Service-Dispatch	TX	H	H	18.7	34.9		(9.42)	Yes	15.5	36.8		(12.30)	Yes	14.2	41.3		(13.79)	Yes	HIT
39-02	Receipt to Clear Duration - Bus -Affecting Service-Dispatch	TX	H	H	12.9	16.6		(1.58)	Yes	15.3	17.4		(1.09)	Yes	12.7	18.4		(2.23)	Yes	HIT
39-03	Receipt to Clear Duration - Res -Affecting Service-No Dispatch	TX	H	H	5.8	13.0		(1.64)	Yes	6.3	12.6		(0.97)	Yes	7.3	13.7		(1.99)	Yes	HIT
39-04	Receipt to Clear Duration - Bus -Affecting Service-No Dispatch	TX	H	H	4.2	7.8		(0.89)	Yes	4.6	6.0		(0.33)	Yes	9.1	12.5		(0.14)	Yes	HIT
39-05	Receipt to Clear Duration - Res -Out of Service-Dispatch	TX	H	H	14.0	18.9		(10.97)	Yes	13.7	19.5		(13.63)	Yes	13.3	20.2		(12.83)	Yes	HIT
39-06	Receipt to Clear Duration - Bus -Out of Service-Dispatch	TX	H	H	11.6	11.0		0.86	Yes	9.5	10.9		(2.33)	Yes	10.9	11.8		(0.52)	Yes	HIT
39-07	Receipt to Clear Duration - Res -Out of Service-No Dispatch	TX	H	H	6.4	11.0		(2.84)	Yes	15.3	11.9		1.85	No	5.9	12.5		(1.59)	Yes	HIT
39-08	Receipt to Clear Duration - Bus -Out of Service-No Dispatch	TX	H	H	6.7	8.6		(0.55)	Yes	15.4	10.8		0.33	Yes	3.9	8.9		(1.12)	Yes	HIT
39-09	Receipt to Clear Duration - UNEs-Affecting Service-Dispatch	TX	H	H	13.4	31.7		(11.18)	Yes	14.2	33.5		(12.55)	Yes	14.4	37.8		(15.06)	Yes	HIT
39-10	Receipt to Clear Duration - UNEs-Affecting Service-No Dispatch	TX	H	H	7.2	12.5		(1.53)	Yes	5.9	11.8		(1.52)	Yes	6.1	13.6		(2.38)	Yes	HIT
39-11	Receipt to Clear Duration - UNEs-Out of Service-Dispatch	TX	H	H	14.9	17.3		(3.42)	Yes	13.6	17.8		(7.00)	Yes	13.5	18.7		(5.83)	Yes	HIT
39-12	Receipt to Clear Duration - UNEs-Out of Service-No Dispatch	TX	H	H	9.3	10.8		(0.66)	Yes	16.4	11.7		1.35	Yes	10.8	12.2		(0.31)	Yes	HIT
40-01	% Out of Service Less than 24 Hours - Res	TX	M	-	95.1%	89.5%		(11.60)	Yes	95.8%	89.8%		(11.97)	Yes	95.8%	87.3%		(16.08)	Yes	HIT
40-02	% Out of Service Less than 24 Hours - Bus	TX	M	-	93.1%	94.1%		1.46	Yes	95.4%	94.8%		(0.92)	Yes	94.9%	94.3%		(0.83)	Yes	HIT
40-03	% Out of Service Less than 24 Hours - UNEs	TX	M	-	92.8%	90.4%		(3.18)	Yes	93.8%	90.8%		(4.32)	Yes	94.6%	88.6%		(8.99)	Yes	HIT
41-01	% Repeat Reports - Res	TX	H	H	6.2%	8.7%		(5.71)	Yes	6.0%	8.6%		(5.87)	Yes	6.1%	9.1%		(6.50)	Yes	HIT
41-02	% Repeat Reports - Bus	TX	H	H	9.0%	8.3%		0.90	Yes	8.6%	8.0%		0.69	Yes	8.0%	8.2%		(0.26)	Yes	HIT
41-03	% Repeat Reports - UNEs	TX	H	H	10.2%	8.7%		2.46	No	10.0%	8.5%		2.50	No	10.3%	9.0%		2.50	No	MISS
42-01	% of Trouble Reports with No Access Status - Res	TX		-	9.3%	11.6%		(4.71)	Yes	9.6%	11.1%		(3.02)	Yes	9.8%	11.7%		(3.99)	Yes	HIT
42-02	% of Trouble Reports with No Access Status - Bus	TX	-	-	3.7%	4.6%		(1.50)	Yes	3.9%	4.5%		(0.99)	Yes	4.4%	5.4%		(1.51)	Yes	HIT
42-03	% of Trouble Reports with No Access Status - UNEs	TX	-	-	5.9%	10.3%		(5.59)	Yes	6.1%	9.9%		(5.40)	Yes	6.4%	10.7%		(6.64)	Yes	HIT
43-01	Avg. Install Interval - VGPL	TX	H	H	5.5	9.4		(8.26)	Yes	9.9	10.2		(0.68)	Yes	4.9	8.1		(9.70)	Yes	HIT
43-02	Avg. Install Interval - DSL	TX	H	H	n/a	n/a		Base < 10	-	3.6	7.1		Base < 10	-	0.0	7.1		Base < 10	-	-
43-03	Avg. Install Interval - DDS	TX	H	H	32.0	7.6		Base < 10	-	n/a	19.3		Base < 10	-	n/a	6.0		Base < 10	-	-
43-04	Avg. Install Interval - DS1	TX	H	H	5.0	12.4		(2.30)	Yes	n/a	11.6		Base < 10	-	n/a	13.9		Base < 10	-	-
43-05	Avg. Install Interval - DS3	TX	H	H	n/a	7.0		Base < 10	-	n/a	13.2		Base < 10	-	n/a	7.5		Base < 10	-	-
43-06	Avg. Install Interval - ISDN/BRI	TX	H	H	11.2	9.8		1.81	No	5.5	10.5		(6.80)	Yes	7.6	8.9		(1.64)	Yes	HIT
43-07	Avg. Install Interval - ISDN/PRI	TX	H	H	11.6	13.4		(2.14)	Yes	7.3	11.6		(9.31)	Yes	6.3	10.2		(9.85)	Yes	HIT
43-08	Avg. Install Interval - ISDN/Combo	TX	H	H	n/a	9.8		Base < 10	-	n/a	10.5		Base < 10	-	n/a	8.9		Base < 10	-	-
44-01	% Installs Completed Within 20 Days - VGPL	TX	-	-	95.9%	88.4%		(5.23)	Yes	87.1%	90.2%		2.41	No	100.0%	94.5%		(5.63)	Yes	HIT
44-02	% Installs Completed Within 20 Days - DSL	TX	-	-	n/a	n/a		Base < 10	-	100.0%	97.3%		Base < 10	-	0.0%	97.9%		Base < 10	-	-
44-03	% Installs Completed Within 20 Days - DDS	TX	-	-	0.0%	88.9%		Base < 10	-	n/a	66.7%		Base < 10	-	n/a	100.0%		Base < 10	-	-
44-04	% Installs Completed Within 20 Days - DS1	TX	-	-	100.0%	87.6%		(1.82)	Yes	n/a	87.6%		Base < 10	-	n/a	83.7%		Base < 10	-	-
44-05	% Installs Completed Within 20 Days - DS3	TX	-	-	n/a	100.0%		Base < 10	-	n/a	66.7%		Base < 10	-	n/a	100.0%		Base < 10	-	-
44-06	% Installs Completed Within 20 Days - ISDN/BRI	TX	-	-	96.7%	92.3%		(2.01)	Yes	96.8%	91.2%		(2.85)	Yes	97.5%	94.9%		(1.44)	Yes	HIT
44-07	% Installs Completed Within 20 Days - ISDN/PRI	TX	-	-	100.0%	83.6%		(5.34)	Yes	100.0%	94.5%		(3.43)	Yes	100.0%	92.0%		(4.38)	Yes	HIT
44-08	% Installs Completed Within 20 Days - ISDN/Combo	TX	-	-	n/a	92.3%		Base < 10	-	n/a	91.2%		Base < 10	-	n/a	94.9%		Base < 10	-	-
45-01	% SWBT Caused Missed Due Dates - VGPL	TX	H	H	0.5%	5.9%		(6.89)	Yes	16.0%	3.3%		17.65	No	3.9%	3.9%		0.00	Yes	HIT
45-02	% SWBT Caused Missed Due Dates - DSL	TX	H	H	n/a	n/a		Base < 10	-	0.0%	4.4%		Base < 10	-	0.0%	6.3%		Base < 10	-	-
45-03	% SWBT Caused Missed Due Dates - DDS	TX	H	H	7.1%	12.5%		(0.52)	Yes	n/a	33.3%		Base < 10	-	n/a	0.0%		Base < 10	-	-
45-04	% SWBT Caused Missed Due Dates - DS1	TX	H	H	2.5%	5.2%		(0.75)	Yes	n/a	4.5%		Base < 10	-	n/a	9.8%		Base < 10	-	-
45-05	% SWBT Caused Missed Due Dates - DS3	TX	H	H	10.5%	6.3%		0.51	Yes	n/a	0.0%		Base < 10	-	n/a	0.0%		Base < 10	-	-
45-06	% SWBT Caused Missed Due Dates - ISDN/BRI	TX	H	H	15.8%	15.7%		0.06	Yes	23.0%	16.2%		3.50	No	6.4%	15.5%		(4.61)	Yes	HIT
45-07	% SWBT Caused Missed Due Dates - ISDN/PRI	TX	H	H	0.0%	4.4%		(3.87)	Yes	0.0%	2.8%		(4.56)	Yes	10.7%	2.0%		8.82	No	HIT
45-08	% SWBT Caused Missed Due Dates - ISDN/Combo	TX	H	H	n/a	15.7%		Base < 10	-	0.0%	16.2%		Base < 10	-	n/a	15.5%		Base < 10	-	-
46-01	% Trouble Reports within 30 Days - VGPL	TX	H	H	1.3%	2.8%		(0.84)	Yes	0.2%	1.9%		(3.90)	Yes	0.4%	2.2%		(3.69)	Yes	HIT
46-02	% Trouble Reports within 30 Days - DSL	TX	H	H	n/a	n/a		Base < 10	-	11.1%	7.8%		Base < 10	-	0.0%	5.2%		Base < 10	-	-
46-03	% Trouble Reports within 30 Days - DDS	TX	H	H	8.3%	12.5%		(0.38)	Yes	n/a	50.0%		Base < 10	-	n/a	21.4%		Base < 10	-	-
46-04	% Trouble Reports within 30 Days - DS1	TX	H	H	5.1%	10.1%		(0.99)	Yes	n/a	12.0%		Base < 10	-	n/a	11.3%		Base < 10	-	-
46-05	% Trouble Reports within 30 Days - DS3	TX	H	H	0.0%	18.8%		(3.25)	Yes	n/a	0.0%		Base < 10	-	n/a	25.0%		Base < 10	-	-
46-06	% Trouble Reports within 30 Days - ISDN/BRI	TX	H	H	7.9%	5.1%		1.88	No	4.6%	5.0%		(0.40)	Yes	4.7%	5.1%		(0.38)	Yes	HIT
46-07	% Trouble Reports within 30 Days - ISDN/PRI	TX	H	H	n/a	0.1%		Base < 10	-	n/a	0.1%		Base < 10	-	n/a	0.1%		Base < 10	-	-

Texas Aggregated Performance Measures

					Oct-99					Nov-99					Dec-99					Overall Result
			Payment Level					% Yes -	83%				% Yes -	83%				% Yes -	84%	
PM	Description	Area	Tier 1	Tier 2	CLEC	SWBT	Bench-mark	Z-Value	Result	CLEC	SWBT	Bench-mark	Z-Value	Result	CLEC	SWBT	Bench mark	Z-Value	Result	86%
46-08	% Trouble Reports within 30 Days - ISDN/Combo	TX	H	H	n/a	5.1%		Base < 10		n/a	5.0%		Base < 10	-	n/a	5.1%		Base < 10	-	-
47-01	% Missed Due Dates Due to LOF - VGPL	TX	L	-	0.0%	1.6%		(3.92)	Yes	0.0%	0.9%		(2.98)	Yes	0.0%	0.6%		(2.32)	Yes	HIT
47-02	% Missed Due Dates Due to LOF - DSL	TX	L	-	n/a	n/a		Base < 10	-	0.0%	1.1%		Base < 10	-	0.0%	0.6%		Base < 10	-	-
47-03	% Missed Due Dates Due to LOF - DDS	TX	L	-	0.0%	12.5%		(1.38)	Yes	n/a	16.7%		Base < 10	-	n/a	0.0%		Base < 10	-	-
47-04	% Missed Due Dates Due to LOF - DS1	TX	L	-	0.0%	1.7%		(0.84)	Yes	n/a	1.5%		Base < 10	-	n/a	3.9%		Base < 10	-	-
47-05	% Missed Due Dates Due to LOF - DS3	TX	L	-	0.0%	6.3%		(1.90)	Yes	n/a	0.0%		Base < 10	-	n/a	0.0%		Base < 10	-	-
47-06	% Missed Due Dates Due to LOF - ISDN/BRI	TX	L	-	1.9%	2.2%		(0.41)	Yes	1.8%	1.3%		0.79	Yes	2.6%	0.8%		3.49	No	HIT
47-07	% Missed Due Dates Due to LOF - ISDN/PRI	TX	L	-	0.0%	0.0%		0.00	Yes	0.0%	0.0%		0.00	Yes	0.0%	0.0%		0.00	Yes	HIT
47-08	% Missed Due Dates Due to LOF - ISDN/Combo	TX	L	-	n/a	2.2%		Base < 10	-	0.0%	1.3%		Base < 10	-	n/a	0.8%		Base < 10	-	-
47-09	% Missed Due Dates Due to LOF > 30 Days - VGPL	TX	L	-	n/a	10.0%		Base < 10	-	n/a	7.5%		Base < 10	-	n/a	16.0%		Base < 10	-	-
47-10	% Missed Due Dates Due to LOF > 30 Days - DSL	TX	L	-	n/a	n/a		Base < 10	-	n/a	11.6%		Base < 10	-	n/a	7.4%		Base < 10	-	-
47-11	% Missed Due Dates Due to LOF > 30 Days - DDS	TX	L	-	n/a	33.3%		Base < 10	-	n/a	100.0%		Base < 10	-	n/a	n/a		Base < 10	-	-
47-12	% Missed Due Dates Due to LOF > 30 Days - DS1	TX	L	-	n/a	0.0%		Base < 10	-	n/a	50.0%		Base < 10	-	n/a	37.5%		Base < 10	-	-
47-13	% Missed Due Dates Due to LOF > 30 Days - DS3	TX	L	-	n/a	0.0%		Base < 10	-	n/a	n/a		Base < 10	-	n/a	n/a		Base < 10	-	-
47-14	% Missed Due Dates Due to LOF > 30 Days - ISDN/BRI	TX	L	-	0.0%	8.7%		(1.02)	Yes	0.0%	4.2%		Base < 10	-	0.0%	0.0%		Base < 10	-	-
47-15	% Missed Due Dates Due to LOF > 30 Days - ISDN/PRI	TX	L	-	n/a	n/a		Base < 10	-	n/a	n/a		Base < 10	-	n/a	n/a		Base < 10	-	-
47-16	% Missed Due Dates Due to LOF > 30 Days - ISDN/Combo	TX	L	-	n/a	8.7%		Base < 10	-	n/a	4.2%		Base < 10	-	n/a	0.0%		Base < 10	-	-
47-17	% Missed Due Dates Due to LOF > 90 Days - VGPL	TX	L	-	n/a	0.0%		Base < 10	-	n/a	4.5%		Base < 10	-	n/a	0.0%		Base < 10	-	-
47-18	% Missed Due Dates Due to LOF > 90 Days - DSL	TX	L	-	n/a	n/a		Base < 10	-	n/a	0.0%		Base < 10	-	n/a	0.0%		Base < 10	-	-
47-19	% Missed Due Dates Due to LOF > 90 Days - DDS	TX	L	-	n/a	0.0%		Base < 10	-	n/a	0.0%		Base < 10	-	n/a	n/a		Base < 10	-	-
47-20	% Missed Due Dates Due to LOF > 90 Days - DS1	TX	L	-	n/a	0.0%		Base < 10	-	n/a	0.0%		Base < 10	-	n/a	0.0%		Base < 10	-	-
47-21	% Missed Due Dates Due to LOF > 90 Days - DS3	TX	L	-	n/a	0.0%		Base < 10	-	n/a	n/a		Base < 10	-	n/a	n/a		Base < 10	-	-
47-22	% Missed Due Dates Due to LOF > 90 Days - ISDN/BRI	TX	L	-	0.0%	0.0%		0.00	Yes	0.0%	0.0%		Base < 10	-	0.0%	0.0%		Base < 10	-	-
47-23	% Missed Due Dates Due to LOF > 90 Days - ISDN/PRI	TX	L	-	n/a	n/a		Base < 10	-	n/a	n/a		Base < 10	-	n/a	n/a		Base < 10	-	-
47-24	% Missed Due Dates Due to LOF > 90 Days - ISDN/Combo	TX	L	-	n/a	0.0%		Base < 10	-	n/a	0.0%		Base < 10	-	n/a	0.0%		Base < 10	-	-
48-01	Avg. Delay Days Due to LOF - VGPL	TX	-	-	n/a	11.8		Base < 10	-	n/a	26.0		Base < 10	-	n/a	13.4		Base < 10	-	-
48-02	Avg. Delay Days Due to LOF - DSL	TX	-	-	n/a	n/a		Base < 10	-	n/a	13.7		Base < 10	-	n/a	10.9		Base < 10	-	-
48-03	Avg. Delay Days Due to LOF - DDS	TX	-	-	n/a	21.0		Base < 10	-	n/a	35.0		Base < 10	-	n/a	n/a		Base < 10	-	-
48-04	Avg. Delay Days Due to LOF - DS1	TX	-	-	n/a	11.2		Base < 10	-	n/a	38.3		Base < 10	-	n/a	24.0		Base < 10	-	-
48-05	Avg. Delay Days Due to LOF - DS3	TX	-	-	n/a	2.0		Base < 10	-	n/a	n/a		Base < 10	-	n/a	n/a		Base < 10	-	-
48-06	Avg. Delay Days due to LOF - ISDN/BRI	TX	-	-	8.4	12.2		(1.03)	Yes	15.1	11.2		Base < 10	-	11.8	8.5		Base < 10	-	-
48-07	Avg. Delay Days due to LOF - ISDN/PRI	TX	-	-	n/a	n/a		Base < 10	-	n/a	n/a		Base < 10	-	n/a	n/a		Base < 10	-	-
48-08	Avg. Delay Days due to LOF - ISDN/Combo	TX	-	-	n/a	12.2		Base < 10	-	n/a	11.2		Base < 10	-	n/a	8.5		Base < 10	-	-
49-01	Avg. Delay Days for SWBT Caused Missed Due Dates - VGPL	TX	M	-	2.8	15.3		Base < 10	-	3.6	17.8		(3.75)	Yes	4.4	9.2		(1.58)	Yes	HIT
49-02	Avg. Delay Days for SWBT Caused Missed Due Dates - DSL	TX	M	-	n/a	n/a		Base < 10	-	n/a	7.9		Base < 10	-	n/a	4.1		Base < 10	-	-
49-03	Avg. Delay Days for SWBT Caused Missed Due Dates - DDS	TX	M	-	16.0	21.0		Base < 10	-	n/a	21.5		Base < 10	-	n/a	n/a		Base < 10	-	-
49-04	Avg. Delay Days for SWBT Caused Missed Due Dates - DS1	TX	M	-	5.0	13.1		Base < 10	-	n/a	18.5		Base < 10	-	n/a	14.7		Base < 10	-	-
49-05	Avg. Delay Days for SWBT Caused Missed Due Dates - DS3	TX	M	-	28.8	2.0		Base < 10	-	n/a	n/a		Base < 10	-	n/a	n/a		Base < 10	-	-
49-06	Avg. Delay Days for SWBT Caused Missed Due Dates - ISDN/BRI	TX	M	-	11.4	9.0		1.20	Yes	6.0	11.3		(1.95)	Yes	14.3	20.3		(0.73)	Yes	HIT
49-07	Avg. Delay Days for SWBT Caused Missed Due Dates - ISDN/PRI	TX	M	-	n/a	9.6		Base < 10	-	n/a	7.0		Base < 10	-	6.0	6.0		(0.01)	Yes	-
49-08	Avg. Delay Days for SWBT Caused Missed Due Dates - ISDN/Combo	TX	M	-	n/a	9.0		Base < 10	-	n/a	11.3		Base < 10	-	n/a	20.3		Base < 10	-	-
50-01	% SWBT Caused Missed Due Dates > 30 Days - VGPL	TX	L	-	0.0%	0.4%		(1.83)	Yes	0.0%	0.5%		(2.24)	Yes	0.0%	0.4%		(2.05)	Yes	HIT
50-02	% SWBT Caused Missed Due Dates > 30 Days - DSL	TX	L	-	n/a	n/a		Base < 10	-	0.0%	0.2%		Base < 10	-	0.0%	0.1%		Base < 10	-	-
50-03	% SWBT Caused Missed Due Dates > 30 Days - DDS	TX	L	-	0.0%	4.2%		(0.77)	Yes	n/a	16.7%		Base < 10	-	n/a	0.0%		Base < 10	-	-
50-04	% SWBT Caused Missed Due Dates > 30 Days - DS1	TX	L	-	0.0%	0.3%		(0.37)	Yes	n/a	1.1%		Base < 10	-	n/a	1.5%		Base < 10	-	-
50-05	% SWBT Caused Missed Due Dates > 30 Days - DS3	TX	L	-	3.5%	0.0%		0.76	Yes	n/a	0.0%		Base < 10	-	n/a	0.0%		Base < 10	-	-
50-06	% SWBT Caused Missed Due Dates > 30 Days - ISDN/BRI	TX	L	-	1.6%	0.8%		1.81	No	0.3%	1.3%		(1.86)	Yes	0.6%	2.6%		(2.34)	Yes	HIT
50-07	% SWBT Caused Missed Due Dates > 30 Days - ISDN/PRI	TX	L	-	0.0%	0.1%		(0.55)	Yes	0.0%	0.1%		(0.87)	Yes	0.0%	0.0%		(0.19)	Yes	HIT
50-08	% SWBT Caused Missed Due Dates > 30 Days - ISDN/Combo	TX	L	-	n/a	0.8%		Base < 10	-	0.0%	1.3%		Base < 10	-	n/a	2.6%		Base < 10	-	-
52-01	Mean Time to Restore - VGPL - Dispatch	TX	H	H	6.7	5.2		0.98	Yes	5.2	5.0		0.15	Yes	11.6	4.9		7.89	No	HIT
52-02	Mean Time to Restore - DSL - Dispatch	TX	H	H	n/a	n/a		Base < 10	-	9.9	14.8		Base < 10	-	15.7	12.6		0.90	Yes	-
52-03	Mean Time to Restore - DDS - Dispatch	TX	H	H	4.2	7.6		Base < 10	-	n/a	2.7		Base < 10	-	n/a	5.6		Base < 10	-	-
52-04	Mean Time to Restore - DS1 - Dispatch	TX	H	H	5.2	3.4		Base < 10	-	n/a	3.2		Base < 10	-	3.4	2.9		Base < 10	-	-
52-05	Mean Time to Restore - DS3 - Dispatch	TX	H	H	2.1	4.7		Base < 10	-	27.6	6.4		Base < 10	-	n/a	6.3		Base < 10	-	-
52-06	Mean Time to Restore - ISDN/BRI - Dispatch	TX	H	H	6.5	8.5		(0.64)	Yes	10.1	6.6		1.92	No	11.9	5.8		5.04	No	MISS
52-07	Mean Time to Restore - ISDN/PRI - Dispatch	TX	H	H	1.4	4.0		Base < 10	-	1.2	4.6		Base < 10	-	3.1	4.1		Base < 10	-	-
52-08	Mean Time to Restore - ISDN/Combo - Dispatch	TX	H	H	n/a	8.5		Base < 10	-	18.6	6.6		Base < 10	-	4.7	5.8		Base < 10	-	-

Texas Aggregated Performance Measures

					Oct-99					Nov-99					Dec-99					Overall Result
			Payment Level					% Yes -	83%				% Yes -	83%				% Yes -	84%	
PM	Description	Area	Tier 1	Tier 2	CLEC	SWBT	Bench-mark	Z-Value	Result	CLEC	SWBT	Bench-mark	Z-Value	Result	CLEC	SWBT	Bench-mark	Z-Value	Result	86%
52-09	Mean Time to Restore - VGPL - No Dispatch	TX	H	H	1.3	3.0		Base < 10	-	21.0	1.4		Base < 10	-	0.5	1.2		Base < 10	-	-
52-10	Mean Time to Restore - DSL - No Dispatch	TX	H	H	n/a	n/a		Base < 10	-	2.0	5.6		Base < 10	-	n/a	8.1		Base < 10	-	-
52-11	Mean Time to Restore - DDS - No Dispatch	TX	H	H	n/a	3.4		Base < 10	-	n/a	1.7		Base < 10	-	n/a	0.6		Base < 10	-	-
52-12	Mean Time to Restore - DS1 - No Dispatch	TX	H	H	1.1	1.1		Base < 10	-	n/a	0.7		Base < 10	-	0.4	0.5		Base < 10	-	-
52-13	Mean Time to Restore - DS3 - No Dispatch	TX	H	H	n/a	6.8		Base < 10	-	n/a	1.0		Base < 10	-	n/a	11.0		Base < 10	-	-
52-14	Mean Time to Restore - ISDN/BRI - No Dispatch	TX	H	H	0.2	3.9		(0.29)	Yes	0.2	2.4		Base < 10	-	0.7	1.6		(0.17)	Yes	HIT
52-15	Mean Time to Restore - ISDN/PRI - No Dispatch	TX	H	H	2.3	4.0		Base < 10	-	0.8	1.0		Base < 10	-	0.0	0.4		Base < 10	-	-
52-16	Mean Time to Restore - ISDN/Combo - No Dispatch	TX	H	H	n/a	3.9		Base < 10	-	n/a	2.4		Base < 10	-	n/a	1.6		Base < 10	-	-
53-01	% Repeat Reports - VGPL	TX	H	H	17.3%	11.4%		1.33	Yes	10.9%	12.8%		(0.41)	Yes	2.1%	12.8%		(2.18)	Yes	HIT
53-02	% Repeat Reports - DSL	TX	H	H	n/a	n/a		Base < 10	-	0.0%	16.1%		(1.38)	Yes	9.4%	12.5%		(0.66)	Yes	HIT
53-03	% Repeat Reports - DDS	TX	H	H	0.0%	10.5%		Base < 10	-	n/a	0.0%		Base < 10	-	n/a	22.2%		Base < 10	-	-
53-04	% Repeat Reports - DS1	TX	H	H	45.5%	18.8%		2.21	No	n/a	16.7%		Base < 10	-	0.0%	19.7%		Base < 10	-	-
53-05	% Repeat Reports - DS3	TX	H	H	0.0%	0.0%		Base < 10	-	0.0%	0.0%		Base < 10	-	n/a	18.2%		Base < 10	-	-
53-06	% Repeat Reports - ISDN/BRI	TX	H	H	12.7%	2.7%		4.93	No	16.1%	2.4%		6.64	No	13.0%	2.5%		5.96	No	MISS
53-07	% Repeat Reports - ISDN/PRI	TX	H	H	0.0%	0.1%		Base < 10	-	50.0%	0.1%		Base < 10	-	0.0%	0.1%		Base < 10	-	-
53-08	% Repeat Reports - ISDN/Combo	TX	H	H	n/a	2.7%		Base < 10	-	0.0%	2.4%		Base < 10	-	0.0%	2.5%		Base < 10	-	-
54-01	Failure Frequency - VGPL	TX	L	-	0.4%	0.7%		(4.02)	Yes	0.5%	0.6%		(2.64)	Yes	0.4%	0.6%		(3.35)	Yes	HIT
54-02	Failure Frequency - DSL	TX	L	-	n/a	n/a		Base < 10	-	3.5%	6.1%		(1.82)	Yes	8.2%	4.6%		4.14	No	-
54-03	Failure Frequency - DDS	TX	L	-	2.9%	1.9%		0.86	Yes	0.0%	2.1%		(0.50)	Yes	0.0%	2.3%		(0.52)	Yes	HIT
54-04	Failure Frequency - DS1	TX	L	-	7.5%	5.8%		0.86	Yes	0.0%	5.0%		(1.23)	Yes	6.7%	4.1%		0.69	Yes	HIT
54-05	Failure Frequency - DS3	TX	L	-	1.3%	4.0%		(1.55)	Yes	100.0%	5.1%		Base < 10	-	0.0%	4.7%		Base < 10	-	-
54-06	Failure Frequency - ISDN/BRI	TX	L	-	2.6%	2.7%		(0.11)	Yes	2.3%	2.4%		(0.43)	Yes	2.9%	2.5%		1.50	Yes	HIT
54-07	Failure Frequency - ISDN/PRI	TX	L	-	0.1%	0.1%		(0.02)	Yes	0.1%	0.1%		(0.17)	Yes	0.1%	0.1%		0.36	Yes	HIT
54-08	Failure Frequency - ISDN/Combo	TX	L	-	n/a	2.7%		Base < 10		5.6%	2.4%		0.86	Yes	5.9%	2.5%		0.90	Yes	HIT
55-01.1	Avg. Install Interval - 8.0 dB Loop (1-10 Loops)	TX	-	-	2.9		3.0	(0.05)	Yes	3.1		3.0	0.13	Yes	2.5		3.0	(0.50)	Yes	HIT
55-01.2	Avg. Install Interval - 8.0 dB Loop (11-20 Loops)	TX	-	-	n/a		7.0	Base < 10	-	5.3		7.0	(1.70)	Yes	5.4		7.0	(1.60)	Yes	HIT
55-01.3	Avg. Install Interval - 8.0 dB Loop (Over 20 Loops)	TX	-	-	n/a		10.0	Base < 10	-	n/a		10.0	Base < 10	-	n/a		10.0	Base < 10	-	-
55-02.1	Avg. Install Interval - 5.0 dB Loop (1-10 Loops)	TX	-	-	2.2		3.0	(0.80)	Yes	2.3		3.0	(0.70)	Yes	2.7		3.0	(0.31)	Yes	HIT
55-02.2	Avg. Install Interval - 5.0 dB Loop (11-20 Loops)	TX	-	-	n/a		7.0	Base < 10	-	n/a		7.0	Base < 10	-	n/a		7.0	Base < 10	-	-
55-02.3	Avg. Install Interval - 5.0 dB Loop (Over 20 Loops)	TX	-	-	n/a		10.0	Base < 10	-	n/a		10.0	Base < 10	-	n/a		10.0	Base < 10	-	-
55-03.1	Avg. Install Interval - BRI Loop (1-10 Loops)	TX	-	-	5.2		3.0	2.24	No	3.2		3.0	0.23	Yes	4.3		3.0	1.27	Yes	HIT
55-03.2	Avg. Install Interval - BRI Loop (11-20 Loops)	TX	-	-	n/a		7.0	Base < 10	-	n/a		7.0	Base < 10	-	n/a		7.0	Base < 10	-	-
55-03.3	Avg. Install Interval - BRI Loop (Over 20 Loops)	TX	-	-	n/a		10.0	Base < 10	-	n/a		10.0	Base < 10	-	n/a		10.0	Base < 10	-	-
55-04.1	Avg. Install Interval - DS1 Loop (All Orders)	TX	-	-	n/a		3.0	Base < 10	-	n/a		3.0	Base < 10	-	n/a		3.0	Base < 10	-	-
55-05.1	Avg. Install Interval - Analog Line Port (All Orders)	TX	-	-	1.5		2.0	(0.48)	Yes	0.3		2.0	(1.72)	Yes	n/a		2.0	Base < 10	-	HIT
55-06.1	Avg. Install Interval - Analog Trunk Port (All Orders)	TX	-	-	2.2		3.0	(0.80)	Yes	2.3		3.0	(0.70)	Yes	2.7		3.0	(0.31)	Yes	HIT
55-07.1	Avg. Install Interval - DS1 Dedicated Circuit (1-10 Circuits)	TX	-	-	n/a		3.0	Base < 10	-	n/a		3.0	Base < 10	-	n/a		3.0	Base < 10	-	-
55-07.2	Avg. Install Interval - DS1 Dedicated Circuit (11-20 Circuits)	TX	-	-	n/a		5.0	Base < 10	-	n/a		5.0	Base < 10	-	n/a		5.0	Base < 10	-	-
55-07.3	Avg. Install Interval - DS1 Dedicated Circuit (Over 20 Circuits)	TX	-	-	n/a		0.0	Base < 10	-	n/a		0.0	Base < 10	-	n/a		0.0	Base < 10	-	-
55-08.1	Avg. Install Interval - DS3 Dedicated Circuit (1-10 Circuits)	TX	-	-	n/a		3.0	Base < 10	-	n/a		3.0	Base < 10	-	n/a		3.0	Base < 10	-	-
55-08.2	Avg. Install Interval - DS3 Dedicated Circuit (11-20 Circuits)	TX	-	-	n/a		5.0	Base < 10	-	n/a		5.0	Base < 10	-	n/a		5.0	Base < 10	-	-
55-08.3	Avg. Install Interval - DS3 Dedicated Circuit (Over 20 Circuits)	TX	-	-	n/a		0.0	Base < 10	-	n/a		0.0	Base < 10	-	n/a		0.0	Base < 10	-	-
55.1-01	Avg. Installation Interval - DSL - No Conditioning	TX	Y	Y	6.8	5.8		0.88	Yes	6.8	6.5		0.86	Yes	7.2	6.8		1.28	Yes	HIT
55.1-02	Avg. Installation Interval - DSL - Conditioning	TX	Y	Y	16.4	9.5		4.14	No	19.3	11.5		7.06	No	14.2	11.5		1.08	Yes	MISS
56-01.1	% Installed Within "x" Days - 8.0 dB Loop (1-10 Loops)	TX	H	H	98.4%		95.0%	(3.37)	Yes	97.8%		95.0%	(2.75)	Yes	97.5%		95.0%	(2.46)	Yes	HIT
56-01.2	% Installed Within "x" Days - 8.0 dB Loop (11-20 Loops)	TX	H	H	100.0%		95.0%	Base < 10	-	90.0%		95.0%	5.00	No	93.3%		95.0%	1.67	Yes	-
56-01.3	% Installed Within "x" Days - 8.0 dB Loop (Over 20 Loops)	TX	H	H	n/a		95.0%	Base < 10	-	100.0%		95.0%	Base < 10	-	100.0%		95.0%	Base < 10	-	-
56-02.1	% Installed Within "x" Days - 5.0 dB Loop (1-10 Loops)	TX	H	H	100.0%		95.0%	(5.00)	Yes	90.0%		95.0%	5.00	No	92.3%		95.0%	2.69	No	MISS
56-02.2	% Installed Within "x" Days - 5.0 dB Loop (11-20 Loops)	TX	H	H	50.0%		95.0%	Base < 10	-	100.0%		95.0%	Base < 10	-	n/a		95.0%	Base < 10	-	-
56-02.3	% Installed Within "x" Days - 5.0 dB Loop (Over 20 Loops)	TX	H	H	n/a		95.0%	Base < 10	-	n/a		95.0%	Base < 10	-	n/a		95.0%	Base < 10		-
56-03.1	% Installed Within "x" Days - BRI Loop (1-10 Loops)	TX	H	H	80.0%		95.0%	15.00	No	84.6%		95.0%	10.38	No	71.6%		95.0%	23.43	No	MISS
56-03.2	% Installed Within "x" Days - BRI Loop (11-20 Loops)	TX	H	H	n/a		95.0%	Base < 10	-	n/a		95.0%	Base < 10	-	n/a		95.0%	Base < 10	-	-
56-03.3	% Installed Within "x" Days - BRI Loop (Over 20 Loops)	TX	H	H	n/a		95.0%	Base < 10	-	n/a		95.0%	Base < 10	-	n/a		95.0%	Base < 10	-	-
56-04.1	% Installed Within "x" Days - DS1 Loop (All Orders)	TX	H	H	68.0%		95.0%	27.00	No	83.9%		95.0%	11.13	No	63.0%		95.0%	32.04	No	MISS
56-05.1	% Installed Within "x" Days - Analog Line Port (All Orders)	TX	H	H	90.5%		95.0%	4.52	No	100.0%		95.0%	(5.00)	Yes	100.0%		95.0%	Base < 10	-	-
56-06.1	% Installed Within "x" Days - Analog Trunk Port (All Orders)	TX	H	H	0.0%		95.0%	Base < 10	-	n/a		95.0%	Base < 10	-	n/a		95.0%	Base < 10	-	-
56-07.1	% Installed Within "x" Days - DS1 Dedicated Circuit (1-10 Circuits)	TX	H	H	0.0%		95.0%	Base < 10	-	n/a		95.0%	Base < 10	-	100.0%		95.0%	Base < 10	-	-

Texas Aggregated Performance Measures

					Oct-99					Nov-99					Dec-99					Overall Result
			Payment Level					% Yes -	83%				% Yes -	83%				% Yes -	84%	
PM	Description	Area	Tier 1	Tier 2	CLEC	SWBT	Bench-mark	Z-Value	Result	CLEC	SWBT	Bench-mark	Z-Value	Result	CLEC	SWBT	Bench-mark	Z-Value	Result	86%
56-07-2	% Installed Within "x" Days - DS1 Dedicated Circuit (11-20 Circuits)	TX	H	H	n/a		95.0%	Base < 10	-	n/a		95.0%	Base < 10	-	n/a		95.0%	Base < 10	-	-
56-08-1	% Installed Within "x" Days - DS3 Dedicated Circuit (1-10 Circuits)	TX	H	H	n/a		95.0%	Base < 10	-	n/a		95.0%	Base < 10	-	100.0%		95.0%	Base < 10	-	-
56-08-2	% Installed Within "x" Days - DS3 Dedicated Circuit (11-20 Circuits)	TX	H	H	n/a		95.0%	Base < 10	-	n/a		95.0%	Base < 10	-	n/a		95.0%	Base < 10	-	-
57-01	Avg. Response Time for Loop Make Up Information	TX	L	M	2.7	3.3		(5.72)	Yes	1.4	2.4		(14.59)	Yes	1.2	2.4		(17.61)	Yes	HIT
58-01	% SWBT Missed Dates Due - 8.0 dB Loop Field Work	TX	H	H	0.5%	11.4%		(7.19)	Yes	0.1%	10.8%		(9.02)	Yes	0.5%	11.5%		(9.76)	Yes	HIT
58-02	% SWBT Missed Dates Due - 8.0 dB Loop No Field Work	TX	H	H	0.5%	0.3%		1.46	Yes	1.4%	0.3%		9.49	No	1.1%	0.2%		8.58	No	MISS
58-03	% SWBT Missed Dates Due - 5.0 dB Loop	TX	H	H	1.2%	5.9%		(3.13)	Yes	1.8%	3.3%		(1.25)	Yes	6.8%	3.9%		2.42	No	HIT
58-04	% SWBT Missed Dates Due - BRI Loop	TX	H	H	11.2%	15.7%		(2.01)	Yes	12.4%	16.2%		(1.64)	Yes	23.3%	15.5%		3.93	No	HIT
58-05	% SWBT Missed Dates Due - ISDN BRI Port	TX	H	H	0.0%	15.7%		Base < 10	-	n/a	16.2%		Base < 10	-	100.0%	15.5%		Base < 10	-	-
58-06	% SWBT Missed Dates Due - DS1 Loop with Test Access	TX	H	H	12.5%	5.2%		2.93	No	10.1%	4.5%		2.33	No	14.6%	9.8%		1.55	Yes	MISS
58-07	% SWBT Missed Dates Due - DS1 Dedicated Transport	TX	H	H	31.6%	5.2%		5.54	No	0.0%	4.5%		Base < 10	-	6.3%	9.8%		(0.47)	Yes	-
58-08	% SWBT Missed Dates Due - ISDN/PRI	TX	H	H	0.0%	4.4%		(3.06)	Yes	0.0%	2.8%		(0.82)	Yes	n/a	2.0%		Base < 10	-	HIT
58-09	% SWBT Missed Dates Due - DSL	TX	H	H	9.4%	3.4%		3.52	No	10.1%	4.4%		4.77	No	12.1%	6.3%		4.79	No	MISS
58-10	% SWBT Missed Dates Due - Analog Trunk Port	TX	H	H	0.0%	5.9%		Base < 10	-	n/a	3.3%		Base < 10	-	0.0%	3.9%		(0.80)	Yes	-
58-11	% SWBT Missed Dates Due - Subtending DD Combination Trunks	TX	H	H	100.0%	5.9%		Base < 10	-	n/a	3.3%		Base < 10	-	0.0%	3.9%		(0.98)	Yes	-
58-12	% SWBT Missed Dates Due - DS3 Dedicated Transport	TX	H	H	36.4%	6.3%		1.98	No	0.0%	0.0%		Base < 10	-	15.4%	0.0%		0.84	Yes	-
58-13	% SWBT Missed Dates Due - Dark Fiber	TX	H	H	66.7%	6.3%		3.39	No	75.0%	0.0%		Base < 10	-	0.0%	0.0%		Base < 10	-	-
58-14	% SWBT Missed Dates Due - Analog Line Port	TX	H	H	18.2%	5.9%		2.95	No	3.4%	3.3%		0.07	Yes	0.0%	3.9%		(0.80)	Yes	HIT
59-01	% Trouble Reports within 30 Days - 8.0 dB Loop	TX	H	H	5.3%	3.3%		7.46	No	4.5%	3.2%		5.51	No	5.7%	3.1%		11.36	No	MISS
59-02	% Trouble Reports within 30 Days - 5.0 dB Loop	TX	H	H	3.6%	2.8%		0.73	Yes	3.6%	1.9%		1.72	No	4.9%	2.2%		2.85	No	MISS
59-03	% Trouble Reports within 30 Days - BRI Loop	TX	H	H	10.2%	5.1%		3.63	No	18.5%	5.0%		9.15	No	20.9%	5.1%		13.17	No	MISS
59-04	% Trouble Reports within 30 Days - ISDN BRI Port	TX	H	H	0.0%	5.1%		Base < 10	-	n/a	5.0%		Base < 10	-	0.0%	5.1%		Base < 10	-	-
59-05	% Trouble Reports within 30 Days - DS1 Loop	TX	H	H	3.3%	10.1%		(2.92)	Yes	8.6%	12.0%		(1.15)	Yes	8.5%	11.3%		(1.10)	Yes	HIT
59-06	% Trouble Reports within 30 Days - DS1 Dedicated Transport	TX	H	H	0.0%	10.1%		(2.05)	Yes	n/a	12.0%		Base < 10	-	0.0%	11.3%		Base < 10	-	-
59-07	% Trouble Reports within 30 Days - ISDN/PRI	TX	H	H	0.0%	0.1%		(0.46)	Yes	0.0%	0.1%		(0.19)	Yes	n/a	0.1%		Base < 10	-	HIT
59-08	% Trouble Reports within 30 Days - DSL	TX	H	H	5.6%	9.1%		(1.35)	Yes	5.6%	7.8%		(1.42)	Yes	15.8%	5.2%		8.54	No	HIT
59-09	% Trouble Reports within 30 Days - Analog Trunk Port	TX	H	H	0.0%	2.8%		Base < 10	-	n/a	1.9%		Base < 10	-	0.0%	2.2%		(0.60)	Yes	-
59-10	% Trouble Reports within 30 Days - Subtending DD Combination Trunks	TX	H	H	0.0%	2.8%		Base < 10	-	n/a	1.9%		Base < 10	-	0.0%	2.2%		(0.74)	Yes	-
59-11	% Trouble Reports within 30 Days - DS3 Dedicated Transport	TX	H	H	0.0%	18.8%		(1.46)	Yes	0.0%	0.0%		Base < 10	-	5.6%	25.0%		(1.40)	Yes	HIT
59-12	% Trouble Reports within 30 Days - Dark Fiber	TX	H	H	0.0%	18.8%		(1.59)	Yes	0.0%	0.0%		Base < 10	-	0.0%	25.0%		Base < 10	-	-
59-13	% Trouble Reports within 30 Days - Analog Line Port	TX	H	H	12.1%	2.8%		3.17	No	13.3%	1.9%		5.45	No	6.3%	2.2%		1.09	Yes	MISS
60-01	% Missed Due Dates Due to LOF - 8.0 dB Loop	TX	L	-	0.1%	8.0%		(12.34)	Yes	0.0%	7.7%		(15.12)	Yes	0.0%	8.1%		(16.47)	Yes	HIT
60-02	% Missed Due Dates Due to LOF - 5.0 dB Loop	TX	L	-	1.2%	1.6%		(0.51)	Yes	0.0%	0.9%		(1.43)	Yes	0.0%	0.6%		(1.24)	Yes	HIT
60-03	% Missed Due Dates Due to LOF - BRI Loop	TX	L	-	4.5%	2.2%		2.46	No	7.0%	1.3%		7.20	No	12.0%	0.8%		17.17	No	MISS
60-04	% Missed Due Dates Due to LOF - ISDN BRI Port	TX	L	-	0.0%	2.2%		Base < 10	-	n/a	1.3%		Base < 10	-	0.0%	0.8%		Base < 10	-	-
60-05	% Missed Due Dates Due to LOF - DS1 Loop	TX	L	-	1.4%	1.7%		(0.31)	Yes	2.1%	1.5%		0.50	Yes	2.8%	3.9%		(0.63)	Yes	HIT
60-06	% Missed Due Dates Due to LOF - DS1 Dedicated Transport	TX	L	-	0.0%	1.7%		(0.82)	Yes	0.0%	1.5%		Base < 10	-	0.0%	3.9%		(0.81)	Yes	HIT
60-07	% Missed Due Dates Due to LOF - ISDN/PRI	TX	L	-	0.0%	0.0%		0.00	Yes	0.0%	0.0%		0.00	Yes	n/a	0.0%		Base < 10	-	HIT
60-08	% Missed Due Dates Due to LOF - DSL	TX	L	-	3.9%	1.0%		3.17	No	4.0%	1.1%		4.72	No	6.7%	0.6%		11.45	No	MISS
60-09	% Missed Due Dates Due to LOF - Analog Trunk Port	TX	L	-	0.0%	1.6%		Base < 10	-	n/a	0.9%		Base < 10	-	0.0%	0.6%		(0.30)	Yes	-
60-10	% Missed Due Dates Due to LOF - Subtending DDC Trunks	TX	L	-	0.0%	1.6%		Base < 10	-	n/a	0.9%		Base < 10	-	0.0%	0.6%		(0.37)	Yes	-
60-11	% Missed Due Dates Due to LOF - DS3 Dedicated Transport	TX	L	-	0.0%	6.3%		(0.84)	Yes	0.0%	0.0%		Base < 10	-	0.0%	0.0%		0.00	Yes	HIT
60-12	% Missed Due Dates Due to LOF - Dark Fiber	TX	L	-	0.0%	6.3%		(0.88)	Yes	0.0%	0.0%		Base < 10	-	0.0%	0.0%		Base < 10	-	-
60-13	% Missed Due Dates Due to LOF - Analog Line Port	TX	L	-	0.0%	1.6%		(0.74)	Yes	0.0%	0.9%		(0.73)	Yes	0.0%	0.6%		(0.30)	Yes	HIT
60-14	% Missed Due Dates Due to LOF - 8.0 dB Loop > 30 Days	TX	L	-	0.0%	10.0%		Base < 10	-	n/a	8.2%		Base < 10	-	n/a	7.6%		Base < 10	-	-
60-15	% Missed Due Dates Due to LOF - 5.0 dB Loop > 30 Days	TX	L	-	0.0%	10.0%		Base < 10	-	n/a	7.5%		Base < 10	-	n/a	16.0%		Base < 10	-	-
60-16	% Missed Due Dates Due to LOF - BRI Loop > 30 Days	TX	L	-	8.3%	8.7%		(0.04)	Yes	0.0%	4.2%		(0.88)	Yes	0.0%	0.0%		0.00	Yes	HIT
60-17	% Missed Due Dates Due to LOF - ISDN BRI Port > 30 Days	TX	L	-	n/a	8.7%		Base < 10	-	n/a	4.2%		Base < 10	-	n/a	0.0%		Base < 10	-	-
60-18	% Missed Due Dates Due to LOF - DS1 Loop > 30 Days	TX	L	-	0.0%	0.0%		Base < 10	-	0.0%	50.0%		Base < 10	-	0.0%	37.5%		Base < 10	-	-
60-19	% Missed Due Dates Due to LOF - DS1 Dedicated Transport > 30 Days	TX	L	-	n/a	0.0%		Base < 10	-	n/a	50.0%		Base < 10	-	n/a	37.5%		Base < 10	-	-
60-20	% Missed Due Dates Due to LOF - ISDN/PRI > 30 Days	TX	L	-	n/a	n/a		Base < 10	-	n/a	n/a		Base < 10	-	n/a	n/a		Base < 10	-	-
60-21	% Missed Due Dates Due to LOF - DSL > 30 Days	TX	L	-	0.0%	7.9%		Base < 10	-	14.3%	11.6%		0.26	Yes	0.0%	7.4%		(1.59)	Yes	HIT
60-22	% Missed Due Dates Due to LOF - Analog Trunk Port > 30 Days	TX	L	-	n/a	10.0%		Base < 10	-	n/a	7.5%		Base < 10	-	n/a	16.0%		Base < 10	-	-
60-23	% Missed Due Dates Due to LOF - Subtending DDC Trunks > 30 Days	TX	L	-	n/a	10.0%		Base < 10	-	n/a	7.5%		Base < 10	-	n/a	16.0%		Base < 10	-	-
60-24	% Missed Due Dates Due to LOF - DS3 Dedicated Transport > 30 Days	TX	L	-	n/a	0.0%		Base < 10	-	n/a	n/a		Base < 10	-	n/a	n/a		Base < 10	-	-
60-25	% Missed Due Dates Due to LOF - Dark Fiber > 30 Days	TX	L	-	n/a	0.0%		Base < 10	-	n/a	n/a		Base < 10	-	n/a	n/a		Base < 10	-	-
60-26	% Missed Due Dates Due to LOF - Analog Line Port > 30 Days	TX	L	-	n/a	10.0%		Base < 10	-	n/a	7.5%		Base < 10	-	n/a	16.0%		Base < 10	-	-

Texas Aggregated Performance Measures

					Oct-99					Nov-99					Dec-99					Overall Result
			Payment Level					% Yes -	83%				% Yes -	83%				% Yes -	84%	
PM	Description	Area	Tier 1	Tier 2	CLEC	SWBT	Bench-mark	Z-Value	Result	CLEC	SWBT	Bench-mark	Z-Value	Result	CLEC	SWBT	Bench-mark	Z-Value	Result	86%
60-27	% Missed Due Dates Due to LOF - 8.0 dB Loop > 90 Days	TX	L	-	0.0%	0.7%		Base < 10	-	n/a	0.5%		Base < 10	-	n/a	0.4%		Base < 10	-	-
60-28	% Missed Due Dates Due to LOF - 5.0 dB Loop > 90 Days	TX	L	-	0.0%	0.0%		Base < 10	-	n/a	4.5%		Base < 10	-	0.0%	0.0%		Base < 10	-	-
60-29	% Missed Due Dates Due to LOF - BRI Loop > 90 Days	TX	L	-	0.0%	0.0%		0.00	Yes	0.0%	0.0%		0.00	Yes	0.0%	0.0%		0.00	Yes	HIT
60-30	% Missed Due Dates Due to LOF - ISDN BRI Port > 90 Days	TX	L	-	n/a	0.0%		Base < 10	-	n/a	0.0%		Base < 10	-	n/a	0.0%		Base < 10	-	-
60-31	% Missed Due Dates Due to LOF - DS1 Loop > 90 Days	TX	L	-	0.0%	0.0%		Base < 10	-	0.0%	0.0%		Base < 10	-	0.0%	0.0%		Base < 10	-	-
60-32	% Missed Due Dates Due to LOF - DS1 Dedicated Transport > 90 Days	TX	L	-	n/a	0.0%		Base < 10	-	n/a	0.0%		Base < 10	-	n/a	0.0%		Base < 10	-	-
60-33	% Missed Due Dates Due to LOF - ISDN/PRI > 90 Days	TX	L	-	n/a	n/a		Base < 10	-	n/a	n/a		Base < 10	-	n/a	n/a		Base < 10	-	-
60-34	% Missed Due Dates Due to LOF - DSL > 90 Days	TX	L	-	0.0%	0.0%		Base < 10	-	0.0%	0.0%		0.00	Yes	0.0%	0.0%		0.00	Yes	HIT
60-35	% Missed Due Dates Due to LOF - Analog Trunk Port > 90 Days	TX	L	-	n/a	0.0%		Base < 10	-	n/a	4.5%		Base < 10	-	n/a	0.0%		Base < 10	-	-
60-36	% Missed Due Dates Due to LOF - Subtending DDC Trunks > 90 Days	TX	L	-	n/a	0.0%		Base < 10	-	n/a	4.5%		Base < 10	-	n/a	0.0%		Base < 10	-	-
60-37	% Missed Due Dates Due to LOF - DS3 Dedicated Transport > 90 Days	TX	L	-	n/a	0.0%		Base < 10	-	n/a	n/a		Base < 10	-	n/a	n/a		Base < 10	-	-
60-38	% Missed Due Dates Due to LOF - Dark Fiber > 90 Days	TX	L	-	n/a	0.0%		Base < 10	-	n/a	n/a		Base < 10	-	n/a	n/a		Base < 10	-	-
60-39	% Missed Due Dates Due to LOF - Analog Line Port > 90 Days	TX	L	-	n/a	0.0%		Base < 10	-	n/a	4.5%		Base < 10	-	n/a	0.0%		Base < 10	-	-
61-01	Avg. Delay Days Due to LOF - 8.0 dB Loop	TX	-	-	27.0	11.9		Base < 10	-	n/a	10.9		Base < 10	-	n/a	10.6		Base < 10	-	-
61-02	Avg. Delay Days Due to LOF - 5.0 dB Loop	TX	-	-	2.0	11.8		Base < 10	-	n/a	26.0		Base < 10	-	n/a	13.4		Base < 10	-	-
61-03	Avg. Delay Days Due to LOF - BRI Loop	TX	-	-	13.4	12.2		0.35	Yes	6.7	11.2		(1.22)	Yes	8.6	8.5		0.08	Yes	HIT
61-04	Avg. Delay Days Due to LOF - ISDN BRI Port	TX	-		n/a	12.2		Base < 10	-	n/a	11.2		Base < 10	-	n/a	8.5		Base < 10	-	-
61-05	Avg. Delay Days Due to LOF - DS1 Loop	TX	-	-	10.0	11.2		Base < 10	-	5.3	38.3		Base < 10	-	7.6	24.0		Base < 10	-	-
61-06	Avg. Delay Days Due to LOF - DS1 Dedicated Transport	TX	-		n/a	11.2		Base < 10	-	n/a	38.3		Base < 10	-	n/a	24.0		Base < 10	-	-
61-07	Avg. Delay Days Due to LOF - ISDN/PRI	TX	-	-	n/a	n/a		Base < 10	-	n/a	n/a		Base < 10	-	n/a	n/a		Base < 10	-	-
61-08	Avg. Delay Days Due to LOF - DSL	TX	-		7.4	9.6		Base < 10	-	16.1	13.7		0.59	Yes	7.5	10.9		(1.31)	Yes	HIT
61-09	Avg. Delay Days Due to LOF - Analog Trunk Port	TX	-	-	n/a	11.8		Base < 10	-	n/a	26.0		Base < 10	-	n/a	13.4		Base < 10	-	-
61-10	Avg. Delay Days Due to LOF - Subtending DDC Trunks	TX	-		n/a	11.8		Base < 10	-	n/a	26.0		Base < 10	-	n/a	13.4		Base < 10	-	-
61-11	Avg. Delay Days Due to LOF - DS3 Dedicated Transport	TX	-	-	n/a	2.0		Base < 10	-	n/a	n/a		Base < 10	-	n/a	n/a		Base < 10	-	-
61-12	Avg. Delay Days Due to LOF - Dark Fiber	TX	-	-	n/a	2.0		Base < 10	-	n/a	n/a		Base < 10	-	n/a	n/a		Base < 10	-	-
61-13	Avg. Delay Days Due to LOF - Analog Line Port	TX	-	-	n/a	11.8		Base < 10	-	n/a	26.0		Base < 10	-	n/a	13.4		Base < 10	-	-
62-01	Avg. Delay Days for SWBT Missed Due Dates - 8.0 dB Loop Field Work	TX	M	-	14.0	6.5		Base < 10	-	3.0	6.6		Base < 10	-	6.0	7.2		Base < 10	-	-
62-02	Avg. Delay Days for SWBT Missed Due Dates - 8.0 dB Loop No Field Work	TX	M		14.4	9.2		Base < 10	-	4.1	7.3		(0.97)	Yes	3.6	9.5		(1.00)	Yes	HIT
62-03	Avg. Delay Days for SWBT Missed Due Dates - 5.0 dB Loop	TX	M	-	2.0	15.3		Base < 10	-	2.0	17.8		Base < 10	-	1.0	9.2		(1.94)	Yes	-
62-04	Avg. Delay Days for SWBT Missed Due Dates - BRI Loop	TX	M	-	10.4	9.0		0.43	Yes	11.4	11.3		0.03	Yes	8.0	20.3		(2.90)	Yes	HIT
62-05	Avg. Delay Days for SWBT Missed Due Dates - ISDN BRI Port	TX	M	-	n/a	9.0		Base < 10	-	n/a	11.3		Base < 10	-	64.0	20.3		Base < 10	-	-
62-06	Avg. Delay Days for SWBT Missed Due Dates - DS1 Loop	TX	M	-	8.6	13.1		(0.70)	Yes	4.5	18.5		(1.61)	Yes	6.8	14.7		(2.37)	Yes	HIT
62-07	Avg. Delay Days for SWBT Missed Due Dates - DS1 Dedicated Transport	TX	M	-	13.5	13.1		0.06	Yes	n/a	18.5		Base < 10	-	13.0	14.7		Base < 10	-	-
62-08	Avg. Delay Days for SWBT Missed Due Dates - ISDN/PRI	TX	M	-	n/a	9.6		Base < 10	-	n/a	7.0		Base < 10	-	n/a	6.0		Base < 10	-	-
62-09	Avg. Delay Days for SWBT Missed Due Dates - DSL	TX	M	-	0.0	6.4		(2.23)	Yes	0.0	7.9		(3.27)	Yes	0.0	4.1		(3.97)	Yes	HIT
62-10	Avg. Delay Days for SWBT Missed Due Dates - Analog Trunk Port	TX	M	-	n/a	15.3		Base < 10	-	n/a	17.8		Base < 10	-	n/a	9.2		Base < 10	-	-
62-11	Avg. Delay Days for SWBT Missed Due Dates - Subtending DDC Trunks	TX	M	-	136.0	15.3		Base < 10	-	n/a	17.8		Base < 10	-	n/a	9.2		Base < 10	-	-
62-12	Avg. Delay Days for SWBT Missed Due Dates - DS3 Dedicated Transport	TX	M	-	10.3	2.0		Base < 10	-	n/a	n/a		Base < 10	-	5.0	n/a		Base < 10	-	-
62-13	Avg. Delay Days for SWBT Missed Due Dates - Dark Fiber	TX	M	-	45.1	2.0		Base < 10	-	80.2	n/a		Base < 10	-	n/a	n/a		Base < 10	-	-
62-14	Avg. Delay Days for SWBT Missed Due Dates - Analog Line Port	TX	M	-	3.8	15.3		Base < 10	-	13.0	17.8		Base < 10	-	n/a	9.2		Base < 10	-	-
63-01	% SWBT Caused Missed Due Dates > 30 Days - 8.0 dB Loop Field Work	TX	L		0.0%	0.9%		(1.95)	Yes	0.0%	0.7%		(2.17)	Yes	0.0%	0.7%		(2.30)	Yes	HIT
63-02	% SWBT Caused Missed Due Dates > 30 Days - 8.0 dB Loop No Field Work	TX	L	-	0.1%	0.0%		4.09	No	0.0%	0.0%		1.73	No	0.0%	0.0%		(0.52)	Yes	MISS
63-03	% SWBT Caused Missed Due Dates > 30 Days - 5.0 dB Loop	TX	L	-	0.0%	0.4%		(0.94)	Yes	0.0%	0.5%		(1.07)	Yes	0.0%	0.4%		(1.09)	Yes	HIT
63-04	% SWBT Caused Missed Due Dates > 30 Days - BRI Loop	TX	L	-	0.4%	0.8%		(0.81)	Yes	1.2%	1.3%		(0.24)	Yes	0.3%	2.6%		(2.82)	Yes	HIT
63-05	% SWBT Caused Missed Due Dates > 30 Days - ISDN BRI Port	TX	L	-	0.0%	0.8%		Base < 10	-	n/a	1.3%		Base < 10	-	100.0%	2.6%		Base < 10	-	-
63-06	% SWBT Caused Missed Due Dates > 30 Days - DS1 Loop	TX	L	-	0.9%	0.3%		0.84	Yes	0.0%	1.1%		(1.46)	Yes	0.0%	1.5%		(1.91)	Yes	HIT
63-07	% SWBT Caused Missed Due Dates > 30 Days - DS1 Dedicated Transport	TX	L	-	0.0%	0.3%		(0.36)	Yes	0.0%	1.1%		Base < 10	-	0.0%	1.5%		(0.49)	Yes	HIT
63-08	% SWBT Caused Missed Due Dates > 30 Days - ISDN/PRI	TX	L	-	0.0%	0.1%		(0.43)	Yes	0.0%	0.1%		(0.16)	Yes	n/a	0.0%		Base < 10	-	HIT
63-09	% SWBT Caused Missed Due Dates > 30 Days - DSL	TX	L	-	0.8%	0.1%		1.88	No	1.2%	0.2%		3.28	No	0.0%	0.1%		(0.59)	Yes	MISS
63-10	% SWBT Caused Missed Due Dates > 30 Days - Analog Trunk Port	TX	L	-	0.0%	0.4%		Base < 10	-	n/a	0.5%		Base < 10	-	0.0%	0.4%		(0.27)	Yes	-
63-11	% SWBT Caused Missed Due Dates > 30 Days - Subtending DDC Trunks	TX	L	-	100.0%	0.4%		Base < 10		n/a	0.5%		Base < 10	-	0.0%	0.4%		(0.33)	Yes	-
63-12	% SWBT Caused Missed Due Dates > 30 Days - DS3 Dedicated Transport	TX	L	-	0.0%	0.0%		0.00	Yes	0.0%	0.0%		Base < 10	-	0.0%	0.0%		0.00	Yes	HIT
63-13	% SWBT Caused Missed Due Dates > 30 Days - Dark Fiber	TX	L	-	58.3%	0.0%		3.53	No	75.0%	0.0%		Base < 10	-	0.0%	0.0%		Base < 10	-	-
63-14	% SWBT Caused Missed Due Dates > 30 Days - Analog Line Port	TX	L	-	0.0%	0.4%		(0.35)	Yes	0.0%	0.5%		(0.55)	Yes	0.0%	0.4%		(0.27)	Yes	HIT
65-01	Trouble Report Rate - 8.0 dB Loop with Test Access	TX	H	H	2.2%	2.1%		0.87	Yes	2.0%	1.9%		0.38	Yes	2.7%	2.0%		6.56	No	HIT
65-02	Trouble Report Rate - 5.0 dB Loop with Test Access	TX	H	H	2.4%	0.7%		10.34	No	1.3%	0.6%		4.55	No	1.6%	0.6%		6.91	No	MISS
65-03	Trouble Report Rate - BRI Loop with Test Access	TX	H	H	5.4%	2.7%		2.60	No	9.1%	2.4%		8.62	No	19.3%	2.5%		25.71	No	MISS

Texas Aggregated Performance Measures

					Oct-99					Nov-99					Dec-99					Overall Result
			Payment Level					% Yes	83%				% Yes	83%				% Yes	84%	
PM	Description	Area	Tier 1	Tier 2	CLEC	SWBT	Bench-mark	Z-Value	Result	CLEC	SWBT	Bench-mark	Z-Value	Result	CLEC	SWBT	Bench-mark	Z-Value	Result	86%
65-04	Trouble Report Rate - ISDN BRI Port	TX	H	H	n/a	2.7%		Base < 10	-	n/a	2.4%		Base < 10	-	0.0%	2.5%		Base < 10	-	-
65-05	Trouble Report Rate - DS1 Loop with Test Access	TX	H	H	2.6%	5.8%		(4.15)	Yes	2.6%	5.0%		(3.66)	Yes	3.9%	4.1%		(0.40)	Yes	HIT
65-06	Trouble Report Rate - DS1 Dedicated Transport	TX	H	H	3.8%	5.8%		(0.75)	Yes	1.3%	5.0%		(1.51)	Yes	0.0%	4.1%		(1.99)	Yes	HIT
65-07	Trouble Report Rate - ISDN/PRI	TX	H	H	0.0%	0.1%		(0.39)	Yes	0.0%	0.1%		(0.43)	Yes	0.0%	0.1%		(0.42)	Yes	HIT
65-08	Trouble Report Rate - DSL	TX	H	H	4.5%	8.4%		(1.78)	Yes	4.1%	6.1%		(1.87)	Yes	7.7%	4.6%		4.32	No	HIT
65-09	Trouble Report Rate - Analog Trunk Port	TX	H	H	0.0%	0.7%		(0.46)	Yes	6.7%	0.6%		4.10	No	2.2%	0.6%		1.39	Yes	HIT
65-10	Trouble Report Rate - Subtending DDC Trunks	TX	H	H	0.0%	0.7%		(0.62)	Yes	0.0%	0.6%		(0.59)	Yes	0.0%	0.6%		(0.68)	Yes	HIT
65-11	Trouble Report Rate - DS3 Dedicated Transport	TX	H	H	0.0%	4.0%		(1.93)	Yes	1.1%	5.1%		(1.68)	Yes	0.0%	4.7%		(2.25)	Yes	HIT
65-12	Trouble Report Rate - Dark Fiber	TX	H	H	0.0%	4.0%		(4.02)	Yes	0.2%	5.1%		(4.19)	Yes	0.7%	4.7%		(3.29)	Yes	HIT
65-13	Trouble Report Rate - Analog Line Port	TX	H	H	16.7%	0.7%		12.31	No	9.6%	0.6%		10.17	No	1.0%	0.6%		0.56	Yes	MISS
66-01	% Missed Repair Commitment - 8 dB Loop	TX	H	H	3.9%	7.9%		(2.47)	Yes	0.6%	7.4%		(4.65)	Yes	2.6%	8.3%		(4.62)	Yes	HIT
67-01	Mean Time to Restore - 8.0 dB Loop with Test Access-Dispatch	TX	H	H	6.3	22.0		(7.40)	Yes	4.7	23.0		(9.85)	Yes	7.0	24.8		(8.72)	Yes	HIT
67-02	Mean Time to Restore - 5.0 dB Loop with Test Access-Dispatch	TX	H	H	6.9	5.2		1.26	Yes	4.1	5.0		(0.72)	Yes	6.6	4.9		1.97	No	HIT
67-03	Mean Time to Restore - BRI Loop with Test Access-Dispatch	TX	H	H	4.8	8.5		(0.61)	Yes	6.3	6.6		(0.10)	Yes	7.8	5.8		2.12	No	HIT
67-04	Mean Time to Restore - ISDN BRI Port-Dispatch	TX	H	H	n/a	8.5		Base < 10	-	n/a	6.6		Base < 10	-	n/a	5.8		Base < 10	-	-
67-05	Mean Time to Restore - DS1 Loop with Test Access-Dispatch	TX	H	H	3.8	3.4		0.50	Yes	3.4	3.2		0.19	Yes	4.6	2.9		3.93	No	HIT
67-06	Mean Time to Restore - DS1 Dedicated Transport-Dispatch	TX	H	H	n/a	3.4		Base < 10	-	0.9	3.2		Base < 10	-	n/a	2.9		Base < 10	-	-
67-07	Mean Time to Restore - ISDN/PRI -Dispatch	TX	H	H	n/a	4.0		Base < 10	-	n/a	4.6		Base < 10	-	n/a	4.1		Base < 10	-	-
67-08	Mean Time to Restore - DSL -Dispatch	TX	H	H	25.9	17.5		Base < 10	-	12.2	14.8		(0.47)	Yes	13.4	12.6		0.27	Yes	HIT
67-09	Mean Time to Restore - Analog Trunk Port-Dispatch	TX	H	H	n/a	5.2		Base < 10	-	5.6	5.0		Base < 10	-	5.7	4.9		Base < 10	-	-
67-10	Mean Time to Restore - Subtending DDC Trunks-Dispatch	TX	H	H	n/a	5.2		Base < 10	-	n/a	5.0		Base < 10	-	n/a	4.9		Base < 10	-	-
67-11	Mean Time to Restore - DS3 Dedicated Transport-Dispatch	TX	H	H	n/a	4.7		Base < 10	-	10.9	6.4		Base < 10	-	n/a	6.3		Base < 10	-	-
67-12	Mean Time to Restore - Dark Fiber-Dispatch	TX	H	H	n/a	4.7		Base < 10	-	2.6	6.4		Base < 10	-	13.7	6.3		Base < 10	-	-
67-13	Mean Time to Restore - Analog Line Port-Dispatch	TX	H	H	10.1	5.2		Base < 10	-	7.8	5.0		Base < 10	-	32.5	4.9		Base < 10	-	-
67-14	Mean Time to Restore - 8.0 dB Loop with Test Access-No Dispatch	TX	H	H	2.3	11.8		(1.01)	Yes	0.3	11.8		Base < 10	-	1.8	13.0		(0.79)	Yes	HIT
67-15	Mean Time to Restore - 5.0 dB Loop with Test Access-No Dispatch	TX	H	H	n/a	3.0		Base < 10	-	n/a	1.4		Base < 10	-	n/a	1.2		Base < 10	-	-
67-16	Mean Time to Restore - BRI Loop with Test Access-No Dispatch	TX	H	H	n/a	3.9		Base < 10	-	1.9	2.4		Base < 10	-	4.8	1.6		Base < 10	-	-
67-17	Mean Time to Restore - ISDN BRI Port-No Dispatch	TX	H	H	n/a	3.9		Base < 10	-	n/a	2.4		Base < 10	-	n/a	1.6		Base < 10	-	-
67-18	Mean Time to Restore - DS1 Loop with Test Access-No Dispatch	TX	H	H	0.0	1.1		Base < 10	-	0.0	0.7		Base < 10	-	29.5	0.5		99.28	No	-
67-19	Mean Time to Restore - DS1 Dedicated Transport-No Dispatch	TX	H	H	1.6	1.1		Base < 10	-	n/a	0.7		Base < 10	-	n/a	0.5		Base < 10	-	-
67-20	Mean Time to Restore - ISDN/PRI - No Dispatch	TX	H	H	n/a	4.0		Base < 10	-	n/a	1.0		Base < 10	-	n/a	0.4		Base < 10	-	-
67-21	Mean Time to Restore - DSL -No Dispatch	TX	H	H	n/a	5.3		Base < 10	-	2.0	5.6		Base < 10	-	0.3	8.1		Base < 10	-	-
67-22	Mean Time to Restore - Analog Trunk Port-No Dispatch	TX	H	H	n/a	3.0		Base < 10	-	n/a	1.4		Base < 10	-	n/a	1.2		Base < 10	-	-
67-23	Mean Time to Restore - Subtending DDC Trunks-No Dispatch	TX	H	H	n/a	3.0		Base < 10	-	n/a	1.4		Base < 10	-	n/a	1.2		Base < 10	-	-
67-24	Mean Time to Restore - DS3 Dedicated Transport-No Dispatch	TX	H	H	n/a	6.8		Base < 10	-	n/a	1.0		Base < 10	-	n/a	11.0		Base < 10	-	-
67-25	Mean Time to Restore - Dark Fiber-No Dispatch	TX	H	H	n/a	6.8		Base < 10	-	n/a	1.0		Base < 10	-	n/a	11.0		Base < 10	-	-
67-26	Mean Time to Restore - Analog Line Port-No Dispatch	TX	H	H	0.8	3.0		Base < 10	-	4.1	1.4		Base < 10	-	n/a	1.2		Base < 10	-	-
68-01	% Out of Service < 24 Hours - 8.0 dB Loop	TX	M	-	96.1%	90.4%		(3.23)	Yes	99.4%	90.8%		(5.32)	Yes	97.4%	88.6%		(6.19)	Yes	HIT
69-01	% Repeat Reports - 8.0 dB Loop with Test Access	TX	H	H	10.3%	12.0%		(0.91)	Yes	7.8%	11.9%		(2.31)	Yes	11.8%	12.1%		(0.23)	Yes	HIT
69-02	% Repeat Reports - 5.0 dB Loop with Test Access	TX	H	H	15.2%	11.4%		0.95	Yes	10.5%	12.8%		(0.41)	Yes	6.5%	12.8%		(1.26)	Yes	HIT
69-03	% Repeat Reports - BRI Loop with Test Access	TX	H	H	15.4%	14.3%		0.11	Yes	18.9%	14.5%		0.76	Yes	16.4%	14.0%		0.72	Yes	HIT
69-04	% Repeat Reports - ISDN BRI Port	TX	H	H	n/a	14.3%		Base < 10	-	n/a	14.5%		Base < 10	-	n/a	14.0%		Base < 10	-	-
69-05	% Repeat Reports - DS1 Loop with Test Access	TX	H	H	11.1%	18.8%		(1.00)	Yes	12.5%	16.7%		(0.62)	Yes	14.5%	19.7%		(0.90)	Yes	HIT
69-06	% Repeat Reports - DS1 Dedicated Transport	TX	H	H	0.0%	18.8%		Base < 10	-	0.0%	16.7%		Base < 10	-	n/a	19.7%		Base < 10	-	-
69-07	% Repeat Reports - ISDN/PRI	TX	H	H	n/a	5.5%		Base < 10	-	n/a	6.4%		Base < 10	-	n/a	5.4%		Base < 10	-	-
69-08	% Repeat Reports - DSL	TX	H	H	0.0%	18.7%		Base < 10	-	0.0%	16.1%		(2.00)	Yes	13.3%	12.5%		0.21	Yes	HIT
69-09	% Repeat Reports - Analog Trunk Port	TX	H	H	n/a	11.4%		Base < 10	-	0.0%	12.8%		Base < 10	-	0.0%	12.8%		Base < 10	-	-
69-10	% Repeat Reports - Subtending DDC Trunks	TX	H	H	n/a	11.4%		Base < 10	-	n/a	12.8%		Base < 10	-	n/a	12.8%		Base < 10	-	-
69-11	% Repeat Reports - DS3 Dedicated Transport	TX	H	H	n/a	0.0%		Base < 10	-	0.0%	0.0%		Base < 10	-	n/a	18.2%		Base < 10	-	-
69-12	% Repeat Reports - Dark Fiber	TX	H	H	n/a	0.0%		Base < 10	-	0.0%	0.0%		Base < 10	-	33.3%	18.2%		Base < 10	-	-
69-13	% Repeat Reports - Analog Line Port	TX	H	H	0.0%	11.4%		Base < 10	-	12.5%	12.8%		Base < 10	-	0.0%	12.8%		Base < 10	-	-
70-01	% Trunk Blockage - SWBT End Office to CLEC	TX	H	H	0.0%		1.0%	(0.99)	Yes	0.0%		1.0%	(0.98)	Yes	2.6%		1.0%	1.63	Yes	HIT
70-02	% Trunk Blockage - SWBT Tandem to CLEC	TX	H	H	0.2%		1.0%	(0.84)	Yes	0.0%		1.0%	(0.98)	Yes	0.5%		1.0%	(0.50)	Yes	HIT
71-01	Common Transport Block > 2%	TX	-	H	1.0%		3.0%	(1.96)	Yes	1.0%		3.0%	(2.00)	Yes	0.7%		3.0%	(2.34)	Yes	HIT
73-01	% Missed Due Dates - Interconnection Trunks	TX	M		13.6%	34.5%		(56.37)	Yes	11.8%	14.8%		(11.38)	Yes	10.2%	60.6%		(149.74)	Yes	HIT
74-01	Avg. Delay Days for Missed Due Dates	TX	L	-	16.9	96.0		(57.97)	Yes	17.3	33.4		(18.25)	Yes	26.0	52.4		(30.55)	Yes	HIT
75-01	% SWBT Missed Due Dates > 30 Days	TX	L	-	3.1%		3.1%	1.06	Yes	2.3%		2.3%	0.27	Yes	2.6%		2.6%	0.56	Yes	HIT

Texas Aggregated Performance Measures

					Oct-99					Nov-99					Dec-99					Overall Result
			Payment Level					% Yes -	83%				% Yes -	83%				% Yes -	84%	
PM	Description	Area	Tier 1	Tier 2	CLEC	SWBT	Bench-mark	Z-Value	Result	CLEC	SWBT	Bench-mark	Z-Value	Result	CLEC	SWBT	Bench-mark	Z-Value	Result	86%
76-01	Avg Trunk Restoral Interval	TX	L		8.5	2709.1		(0.02)	Yes	4.7	201.5		(0.02)	Yes	4.1	567.3		(0.03)	Yes	HIT
77-01	Avg Restoration Interval - Tandem Trunk Groups	TX	H	H	n/a		1.0	Base < 10	-	n/a		1.0	Base < 10	-	n/a		1.0	Base < 10	-	-
77-02	Avg Restoration Interval - NonTandem Trunk Groups	TX	H	H	n/a		2.0	Base < 10	-	n/a		2.0	Base < 10	-	n/a		2.0	Base < 10	-	-
78-01	Avg Interconnection Trunk Install Interval - Interconnection Trunks	TX	H	H	17.9		20.0	(2.06)	Yes	18.2		20.0	(1.82)	Yes	22.8		20.0	2.80	No	HIT
78-02	Avg Interconnection Trunk Install Interval - SS7	TX	H	H	n/a		20.0	Base < 10	-	n/a		20.0	Base < 10	-	15.0		20.0	Base < 10	-	-
78-03	Avg Interconnection Trunk Install Interval - OS/DA	TX	H	H	n/a		20.0	Base < 10	-	n/a		20.0	Base < 10	-	26.0		20.0	Base < 10	-	-
78-04	Avg Interconnection Trunk Install Interval - E-911	TX	H	H	n/a		20.0	Base < 10	-	n/a		20.0	Base < 10	-	18.0		20.0	Base < 10		-
80-01-NT	DA Avg Speed of Answer - North Texas	NT	-	L	5.9		5.9	0.00	Yes	5.5		5.9	(0.40)	Yes	5.5		5.9	(0.40)	Yes	HIT
80-01-WT	DA Avg Speed of Answer - West Texas	WT	-	L	5.9		5.9	0.00	Yes	5.1		5.9	(0.80)	Yes	4.7		5.9	(1.20)	Yes	HIT
80-01-SE	DA Avg Speed of Answer - Southeast Texas	SE	-	L	5.1		5.9	(0.80)	Yes	4.8		5.9	(1.10)	Yes	3.8		5.9	(2.10)	Yes	HIT
82-01-NT	OS Avg Speed of Answer - North Texas	NT	-	L	3.4		3.3	0.10	Yes	3.4		3.3	0.10	Yes	3.1		3.3	(0.20)	Yes	HIT
82-01-WT	OS Avg Speed of Answer - West Texas	WT	-	L	2.5		3.3	(0.80)	Yes	2.6		3.3	(0.70)	Yes	2.4		3.3	(0.90)	Yes	HIT
82-01-SE	OS Avg Speed of Answer - Southeast Texas	SE	-	L	2.8		3.3	(0.50)	Yes	3.1		3.3	(0.20)	Yes	2.6		3.3	(0.70)	Yes	HIT
87-01	% Install Completed - < 10 Numbers per Order, Within 3 Bus Days	TX	-	-	100.0%		100.0%	(10.00)	Yes	100.0%		100.0%	Base < 10	-	100.0%		100.0%	(10.00)	Yes	HIT
87-02	% Install Completed - 11 through 20 Numbers per Order, Within 7 Bus Days	TX	-	-	n/a		n/a	Base < 10	-	n/a		n/a	Base < 10	-	n/a		n/a	Base < 10	-	-
87-03	% Install Completed - > 20 Numbers per Order, Within 7 Bus Days	TX	-	-	n/a		n/a	Base < 10	-	n/a		n/a	Base < 10	-	n/a		n/a	Base < 10	-	-
88-01-1	Avg INP Install Interval < 10 Numbers per Order	TX	L		0.2		3.0	(2.82)	Yes	0.0		3.0	Base < 10	-	1.6		3.0	(1.45)	Yes	HIT
88-01-2	Avg INP Install Interval - 11 through 20 Numbers per Order	TX	L	-	n/a		7.0	Base < 10	-	n/a		7.0	Base < 10	-	n/a		7.0	Base < 10	-	-
88-01-3	Avg INP Install Interval > 20 numbers per Order	TX	L	-	n/a		10.0	Base < 10	-	n/a		10.0	Base < 10	-	n/a		10.0	Base < 10	-	-
89-01	% Trouble Reports Received Within 30 Days of Install	TX	M	-	0.0%	3.0%		(0.58)	Yes	0.0%	2.9%		Base < 10	-	0.0%	2.8%		(2.64)	Yes	HIT
90-01	% SWBT Caused Missed Due Dates > 30	TX	M	-	0.0%	0.3%		(0.18)	Yes	0.0%	0.3%		Base < 10	-	0.0%	0.2%		(0.77)	Yes	HIT
91-01	% of LNP Only Due Dates within Industry Guidelines	TX	-	-	n/a		96.5%	n/a	-	99.8%		96.5%	(3.35)	Yes	100.0%		96.5%	(3.50)	Yes	HIT
92-01	% of Time the OSP Releases Prior to the Exp of the T2 Timer	TX	-	-	96.7%		96.5%	(0.19)	Yes	98.8%		96.5%	(2.28)	Yes	99.7%		96.5%	(3.17)	Yes	HIT
94-01	LNP % FOCs Rec Within 5 Hours - Res/Bus LNP Only (1-19) - LEX	TX	L	M	89.4%		95.0%	5.64	No	93.3%		95.0%	1.67	Yes	96.4%		95.0%	(1.41)	Yes	HIT
94-02	LNP % FOCs Rec Within 5 Hours - Res/Bus Loop (1-19) - LEX	TX	L	M	87.6%		95.0%	7.41	No	91.5%		95.0%	3.55	No	93.2%		95.0%	1.78	No	MISS
94-03	LNP % FOCs Rec Within 48 Hours - LNP Only (20+) - LEX	TX	L	M	n/a		95.0%	Base < 10	-	n/a		95.0%	Base < 10	-	n/a		95.0%	Base < 10	-	-
94-04	LNP % FOCs Rec Within 48 Hours - LNP with Loop (20+) - LEX	TX	L	M	100.0%		95.0%	Base < 10	-	100.0%		95.0%	Base < 10	-	n/a		95.0%	Base < 10	-	-
94-05	LNP % FOCs Rec Within 24 Hours - LNP Comp Bus (1-19) - LEX	TX	L	M	89.5%		95.0%	5.47	No	94.5%		95.0%	0.47	Yes	98.7%		95.0%	(3.67)	Yes	HIT
94-06	LNP % FOCs Rec Within 48 Hours - LNP Comp Bus (20-49) - LEX	TX	L	M	100.0%		95.0%	Base < 10	-	100.0%		95.0%	Base < 10	-	100.0%		95.0%	(5.00)	Yes	-
94-07	LNP % FOCs Rec On Time - LNP Comp Bus (50+) - LEX	TX	L	M	71.0%		95.0%	24.03	No	90.9%		95.0%	4.09	No	91.9%		95.0%	3.11	No	MISS
94-08	LNP % FOCs Rec Within 5 Hours - Res/Bus LNP Only (1-19) - EDI	TX	L	M	n/a		95.0%	Base < 10	-	33.3%		95.0%	Base < 10	-	80.0%		95.0%	Base < 10	-	-
94-09	LNP % FOCs Rec Within 5 Hours - Res/Bus Loop (1-19) - EDI	TX	L	M	73.7%		95.0%	21.34	No	59.8%		95.0%	35.21	No	77.7%		95.0%	17.32	No	MISS
94-10	LNP % FOCs Rec Within 48 Hours - LNP Only (20+) - EDI	TX	L	M	n/a		95.0%	Base < 10	-	n/a		95.0%	Base < 10	-	n/a		95.0%	Base < 10	-	-
94-11	LNP % FOCs Rec Within 48 Hours - LNP with Loop (20+) - EDI	TX	L	M	66.7%		95.0%	Base < 10	-	88.9%		95.0%	Base < 10	-	75.0%		95.0%	20.00	No	-
94-12	LNP % FOCs Rec Within 24 Hours - LNP Comp Bus (1-19) - EDI	TX	L	M	n/a		95.0%	Base < 10	-	n/a		95.0%	Base < 10	-	100.0%		95.0%	Base < 10	-	-
94-13	LNP % FOCs Rec Within 48 Hours - LNP Comp Bus (20-49) - EDI	TX	L	M	n/a		95.0%	Base < 10	-	n/a		95.0%	Base < 10	-	n/a		95.0%	Base < 10	-	-
94-14	LNP % FOCs Rec On Time - LNP Comp Bus (50+) - EDI	TX	L	M	n/a		95.0%	Base < 10	-	n/a		95.0%	Base < 10	-	n/a		95.0%	Base < 10	-	-
95-01	Avg Response Time for Non-Mech Rejects Returned - LNP Only	TX	L		n/a		5.0	n/a	-	9.4		5.0	4.43	No	6.1		5.0	1.13	Yes	-
95-02	Avg Response Time for Non-Mech Rejects Returned - LNP With Loop	TX	L	-	n/a		5.0	n/a	-	4.5		5.0	(0.48)	Yes	8.0		5.0	Base < 10	-	-
100-01	Avg Time of Out of Service for LNP Conversions	TX	H	H	65.4		60.0	5.44	No	9.0		60.0	(50.99)	Yes	8.9		60.0	(51.07)	Yes	HIT
101-01	% Out of Service less than 60 Minutes	TX	M	M	86.6%		96.5%	9.88	No	99.8%		96.5%	(3.34)	Yes	99.2%		96.5%	(2.65)	Yes	HIT
103-01	% Errors for E-911 Database Updates	TX	L	-	0.0%	0.0%		0.00	Yes	0.0%	0.0%		0.00	Yes	0.0%	0.0%		0.00	Yes	HIT
104-01	Avg Time Req to Update 911 Database	TX	L	-	9.3	30.6		(1.68)	Yes	8.0	6.8		1.67	Yes	7.4	25.6		(1.62)	Yes	HIT
105-01	% of Request Processed within 35 Days	TX	L	-	91.3%		90.0%	(1.30)	Yes	100.0%		90.0%	(10.00)	Yes	100.0%		90.0%	(10.00)	Yes	HIT
106-01	Average Days Required to Process a Request	TX	-	-	11.5			n/a	-	10.4			n/a	-	17.1			n/a	-	-
107-01	% Missed Collocation Due Dates - Caged - Initial	TX	H	H	0.0%		5.0%	(5.00)	Yes	0.0%		5.0%	(5.00)	Yes	0.0%		5.0%	(5.00)	Yes	HIT
107-02	% Missed Collocation Due Dates - Caged - Augments	TX	H	H	0.0%		5.0%	(5.00)	Yes	0.0%		5.0%	Base < 10	-	n/a		5.0%	Base < 10	-	-
107-03	% Missed Collocation Due Dates - Cageless - Initial	TX	H	H	0.0%		5.0%	(5.00)	Yes	n/a		5.0%	Base < 10	-	0.0%		5.0%	(5.00)	Yes	HIT
107-04	% Missed Collocation Due Dates - Cageless - Augments	TX	H	H	n/a		5.0%	Base < 10	-	0.0%		5.0%	Base < 10	-	n/a		5.0%	Base < 10	-	-
107-05	% Missed Collocation Due Dates - Shared Caged - Initial	TX	H	H	n/a		5.0%	Base < 10	-	n/a		5.0%	Base < 10	-	n/a		5.0%	Base < 10	-	-
107-06	% Missed Collocation Due Dates - Shared Caged - Augments	TX	H	H	n/a		5.0%	Base < 10	-	n/a		5.0%	Base < 10	-	n/a		5.0%	Base < 10	-	-
107-07	% Missed Collocation Due Dates - Virtual - Initial	TX	H	H	n/a		5.0%	Base < 10	-	n/a		5.0%	Base < 10	-	0.0%		5.0%	Base < 10	-	-
107-08	% Missed Collocation Due Dates - Virtual - Augments	TX	H	H	n/a		5.0%	Base < 10	-	n/a		5.0%	Base < 10	-	n/a		5.0%	Base < 10	-	-
108-01	Avg Delay Days - Caged - Initial	TX	L	-	n/a		n/a	Base < 10	-	n/a		n/a	Base < 10	-	n/a		n/a	Base < 10	-	-
108-02	Avg Delay Days - Caged - Augments	TX	L	-	n/a		n/a	Base < 10	-	n/a		n/a	Base < 10	-	n/a		n/a	Base < 10	-	-
108-03	Avg Delay Days - Cageless - Initial	TX	L		n/a		n/a	Base < 10	-	n/a		n/a	Base < 10	-	n/a		n/a	Base < 10	-	-
108-04	Avg Delay Days - Cageless - Augments	TX	L	-	n/a		n/a	Base < 10	-	n/a		n/a	Base < 10	-	n/a		n/a	Base < 10	-	-

Texas Aggregated Performance Measures

					Oct-99					Nov-99					Dec-99					Overall Result
			Payment Level					% Yes -	83%				% Yes -	83%				% Yes -	84%	
PM	Description	Area	Tier 1	Tier 2	CLEC	SWBT	Bench-mark	Z-Value	Result	CLEC	SWBT	Bench-mark	Z-Value	Result	CLEC	SWBT	Bench-mark	Z-Value	Result	86%
108-05	Avg. Delay Days - Shared Caged - Initial	TX	L	-	n/a		n/a	Base < 10	-	n/a		n/a	Base < 10	-	n/a		n/a	Base < 10	-	-
108-06	Avg. Delay Days - Shared Caged - Augments	TX	L	-	n/a		n/a	Base < 10	-	n/a		n/a	Base < 10	-	n/a		n/a	Base < 10	-	-
108-07	Avg. Delay Days - Virtual - Initial	TX	L	-	n/a		n/a	Base < 10	-	n/a		n/a	Base < 10	-	n/a		n/a	Base < 10	-	-
108-08	Avg. Delay Days - Virtual - Augments	TX	L	-	n/a		n/a	Base < 10	-	n/a		n/a	Base < 10	-	n/a		n/a	Base < 10	-	-
109-01	% of Collocations Requests within Guidelines - Caged - Initial	TX	L	-	100.0%		90.0%	Base < 10	-	85.7%		90.0%	Base < 10	-	100.0%		90.0%	(10.00)	Yes	-
109-02	% of Collocations Requests within Guidelines - Caged - Augments	TX	L	-	100.0%		90.0%	Base < 10		100.0%		90.0%	Base < 10	-	88.2%		90.0%	1.76	No	-
109-03	% of Collocations Requests within Guidelines - Cageless - Initial	TX	L	-	100.0%		90.0%	(10.00)	Yes	100.0%		90.0%	(10.00)	Yes	99.1%		90.0%	(9.07)	Yes	HIT
109-04	% of Collocations Requests within Guidelines - Cageless - Augments	TX	L	-	n/a		90.0%	Base < 10		n/a		90.0%	Base < 10	-	100.0%		90.0%	Base < 10	-	-
109-05	% of Collocations Requests within Guidelines - Shared Caged - Initial	TX	L	-	100.0%		90.0%	Base < 10	-	n/a		90.0%	Base < 10	-	100.0%		90.0%	Base < 10	-	-
109-06	% of Collocations Requests within Guidelines - Shared Caged - Augments	TX	L	-	n/a		90.0%	Base < 10	-	n/a		90.0%	Base < 10	-	n/a		90.0%	Base < 10	-	-
109-07	% of Collocations Requests within Guidelines - Virtual - Initial	TX	L	-	n/a		90.0%	Base < 10	-	n/a		90.0%	Base < 10	-	n/a		90.0%	Base < 10	-	-
109-08	% of Collocations Requests within Guidelines - Virtual - Augments	TX	L	-	n/a		90.0%	Base < 10	-	n/a		90.0%	Base < 10	-	n/a		90.0%	Base < 10	-	-
110-01	Percent of Updates into DA Database within 72 Hours	TX	L	-	99.90%		95.0%	(4.90)	Yes	99.97%		95.0%	(4.97)	Yes	99.95%		95.0%	(4.95)	Yes	HIT
111-01	Average Update Interval for DA Database	TX	L	-	26.5		48.0	(21.52)	Yes	20.8		48.0	(27.22)	Yes	21.0		48.0	(27.02)	Yes	HIT
112-01	% of Database Accuracy for Manual Updates	TX	L	-	100.0%		97.0%	(0.03)	Yes	100.0%		97.0%	(0.03)	Yes	100.0%		97.0%	(0.03)	Yes	HIT
114-01	% of Premature Disconnects - LNP	TX	H	H	0.0%		2.0%	(2.00)	Yes	0.0%		2.0%	(1.99)	Yes	0.0%		2.0%	(1.98)	Yes	HIT
114-02	% of Premature Disconnects - LNP with Loop	TX	H	H	0.1%		2.0%	(1.90)	Yes	0.2%		2.0%	(1.82)	Yes	0.2%		2.0%	(1.77)	Yes	HIT
114-03	% of Premature Disconnects - INP	TX	H	H	n/a		2.0%	Base < 10	-	n/a		2.0%	Base < 10	-	n/a		2.0%	Base < 10	-	-
114-04	% of Premature Disconnects - INP with Loop	TX	H	H	n/a		2.0%	Base < 10	-	n/a		2.0%	Base < 10	-	n/a		2.0%	Base < 10	-	-
115-01	% SWBT Caused Delayed Coordinated Cutovers - LNP	TX	L	-	0.0%		0.0%	(1.00)	Yes	0.0%		0.0%	(1.00)	Yes	0.0%		0.0%	(1.00)	Yes	HIT
115-02	% SWBT Caused Delayed Coordinated Cutovers - LNP with Loop	TX	L	-	0.0%		0.0%	(0.97)	Yes	4.7%		0.0%	(0.38)	Yes	2.9%		0.0%	(1.00)	Yes	HIT
115-03	% SWBT Caused Delayed Coordinated Cutovers - INP	TX	L	-	n/a		0.0%	Base < 10	-	n/a		0.0%	Base < 10	-	n/a		0.0%	Base < 10	-	-
115-04	% SWBT Caused Delayed Coordinated Cutovers - INP with Loop	TX	L	-	n/a		0.0%	Base < 10	-	n/a		0.0%	Base < 10	-	n/a		0.0%	Base < 10	-	-
116-01	% Missed Mech. INP Conversions	TX	M	-	48.6%		0.0%	43.29	No	12.8%		0.0%	11.82	No	90.9%		0.0%	82.46	No	MISS
117-01	% NXXs Loaded/Tested Prior to LERG	TX	H	H	33.3%	35.8%		Base < 10	-	92.3%	30.8%		3.22	No	33.3%	100.0%		Base < 10	-	-
118-01	Avg. Delay Days for NXX Loading and Testing	TX	L	-	5.5	7.4		Base < 10	-	23.0	6.0		Base < 10	-	10.0	n/a		Base < 10	-	-
119-01	Mean Time to Restore (Hours)	TX	H	H	n/a	n/a		n/a		n/a	n/a		n/a	-	9.7	45.7		Base < 10	-	-
120-01	% of Requests Processed within 30 Business Days	TX	-	-	100.0%		90.0%	Base < 10	-	n/a		90.0%	Base < 10	-	n/a		90.0%	Base < 10	-	-
121-01	% of Quotes Provided for Authorized BFRs Within 10 Business Days	TX	H	H	n/a		90.0%	Base < 10	-	n/a		90.0%	Base < 10	-	n/a		90.0%	Base < 10	-	-
121-02	% of Quotes Provided for Authorized BFRs Within 30 Business Days	TX	H	H	n/a		90.0%	Base < 10	-	n/a		90.0%	Base < 10	-	n/a		90.0%	Base < 10	-	-
121-03	% of Quotes Provided for Authorized BFRs Within 90 Business Days	TX	H	H	100.0%		90.0%	Base < 10	-	n/a		90.0%	Base < 10	-	n/a		90.0%	Base < 10	-	-

	Oct-99	Nov-99	Dec-99	Overall
Total # Submeasures	601	601	601	
# with Z Scores	328	305	327	
# with "Base < 10" or Blank	273	296	274	
Critical Z Value	1.70	1.70	1.70	
Number of Submeasures Met	272	253	276	268
Number of Submeasures Missed	56	52	51	43
Success Ratio	82.9%	83.0%	84.4%	86.2%

SWBT Resale POTS Migration Order Process

SWBT Retail to Resale

(EDI Gateway thru Order Creation)

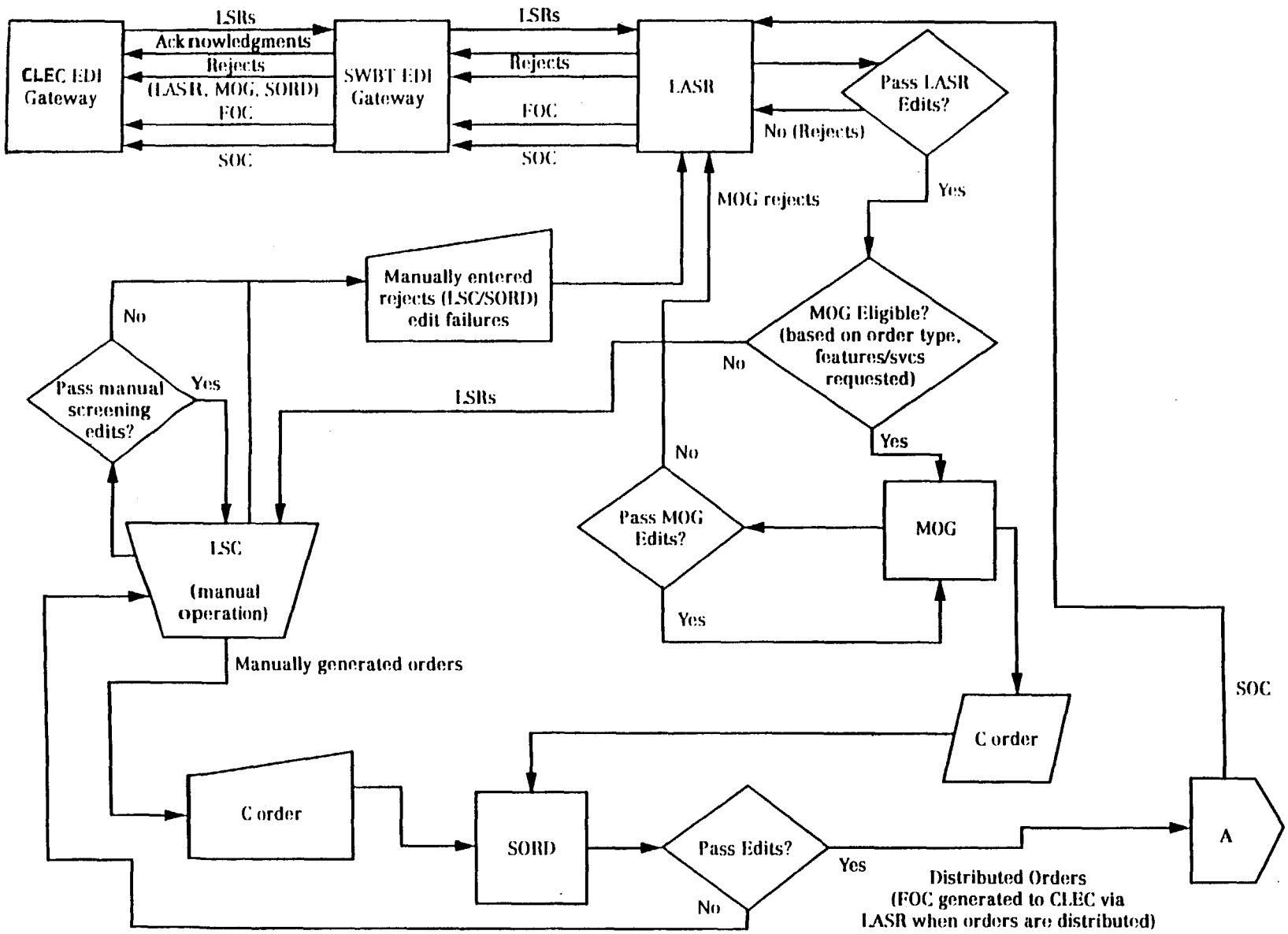

SWBT Resale POTS Migration Order Process

SWBT Retail to Resale

(Distribution thru Provisioning)

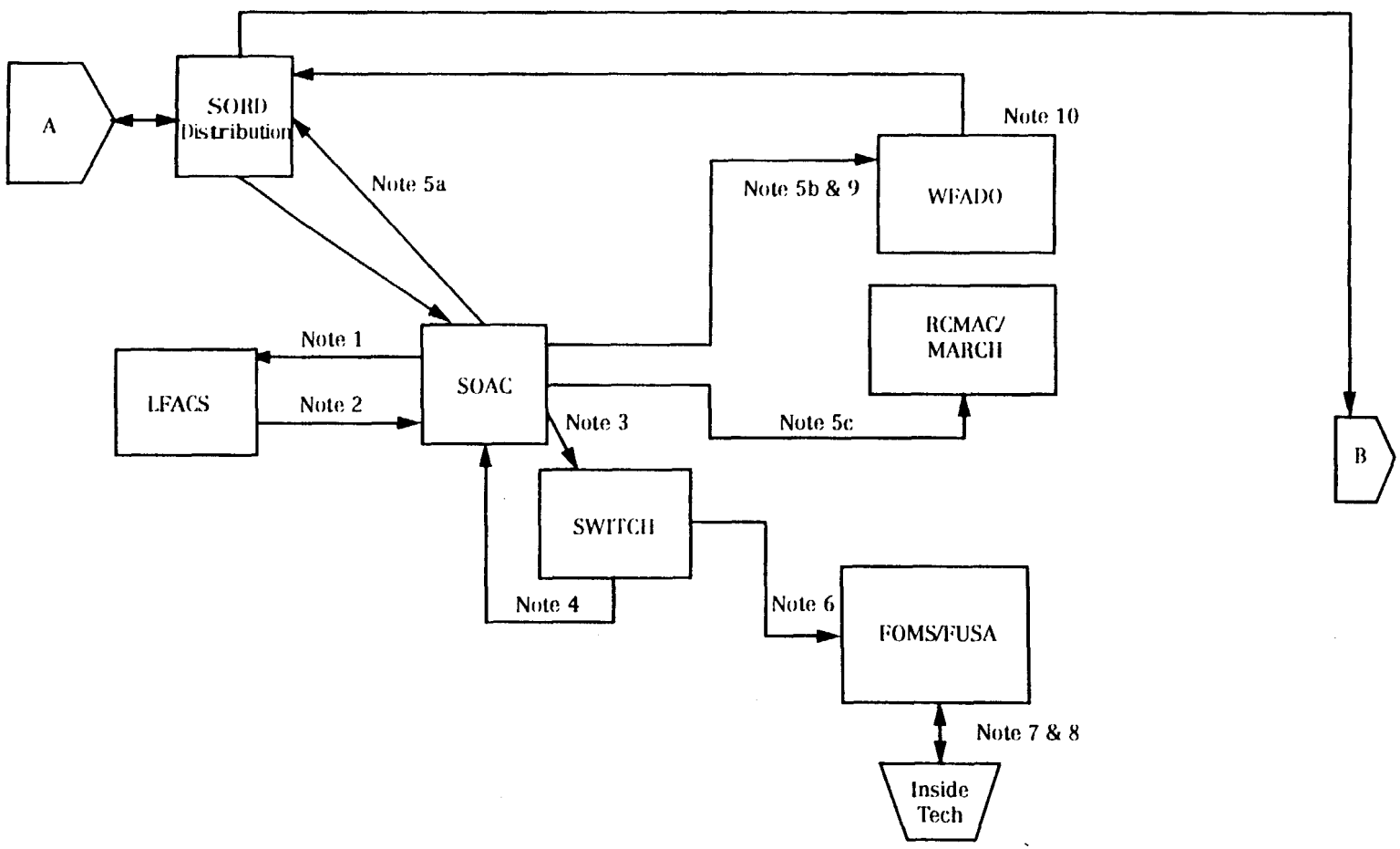

SWBT Resale POTS Migration Order Process

SWBT Retail to Resale

(Notes for Page 2)

1. SOAC determines if facilities assignments are required.
2. LFACs validates the appropriate facility assignments to SOAC.
3. SOAC determines central office facilities are necessary and sends a request to SWITCH.
4. SWITCH validates the appropriate facility assignments to SOAC.
5. SOAC broadcasts the assigned order information to downstream systems:
   a) SOAC sends the assignment image back to SORD.
   b) SOAC sends both a planning message to WFA/DO at initial receipt of order and an assignment message to WFA/DO once all assignments are made.
   c) SOAC sends the order to the MARCH system.
6. SWITCH sends the order information to FOMS/FUSA.
7. The inside technician picks up the order from FOMS/FUSA.
8. The technician completes the order to the FOMS/FUSA system when all work is completed.
9. WFA/DO makes determination if dispatch is required or not. When it is determined that dispatch is not required, the WFA/DO will status the order to Pending Auto-completion (PAC) status. Automatic completion will occur on the due date.
10. WFA/DO will send completion message to SORD. This completion notification and completion distribution of the order in SORD will send the SOC to the CLEC via LASR.

SWBT Resale POTS Migration Order Process

SWBT Retail to Resale

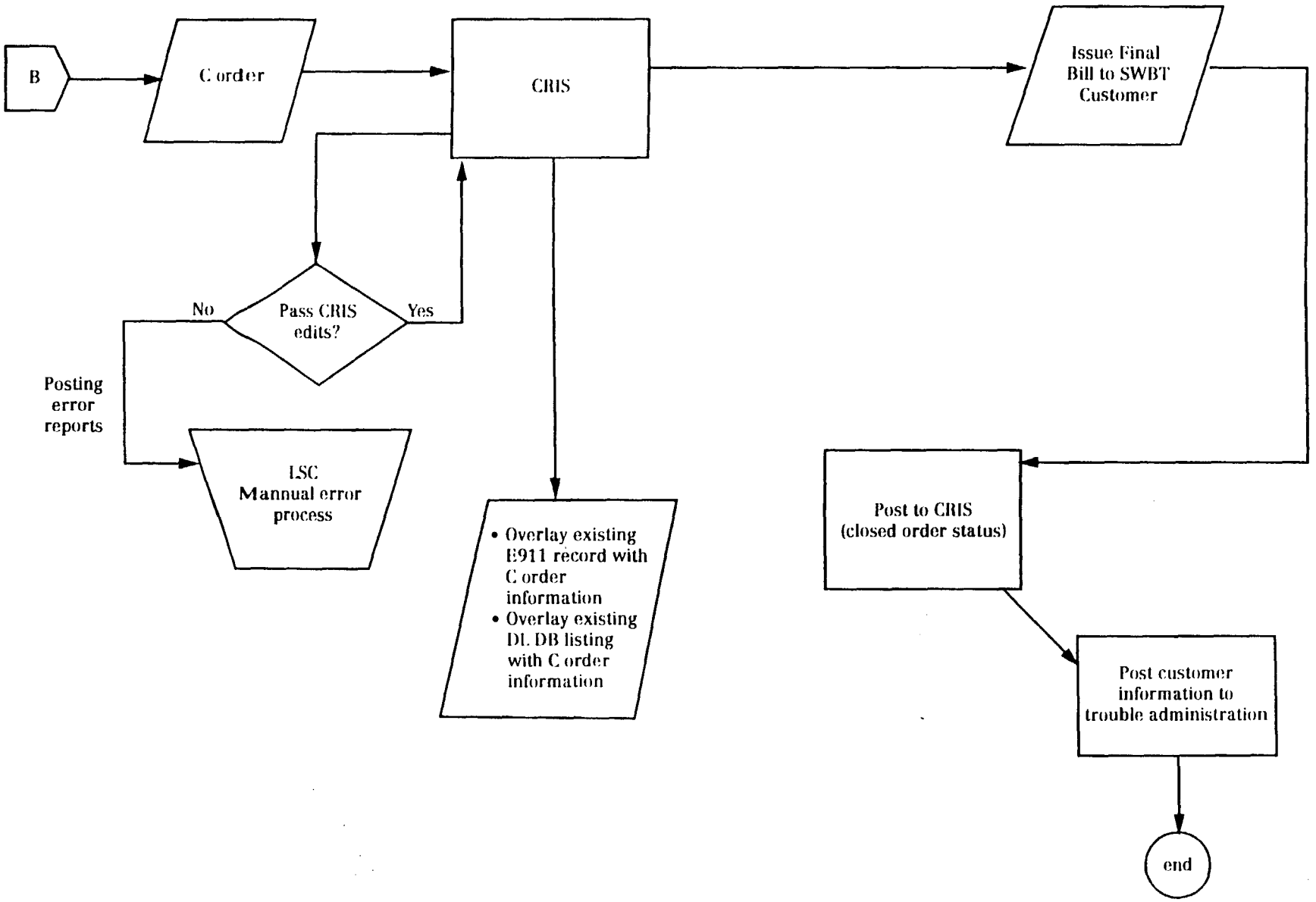

SWBT UNE-P Migration Order Process

SWBT Retail/Resale to UNE-P

(EDI Gateway thru Order Creation)

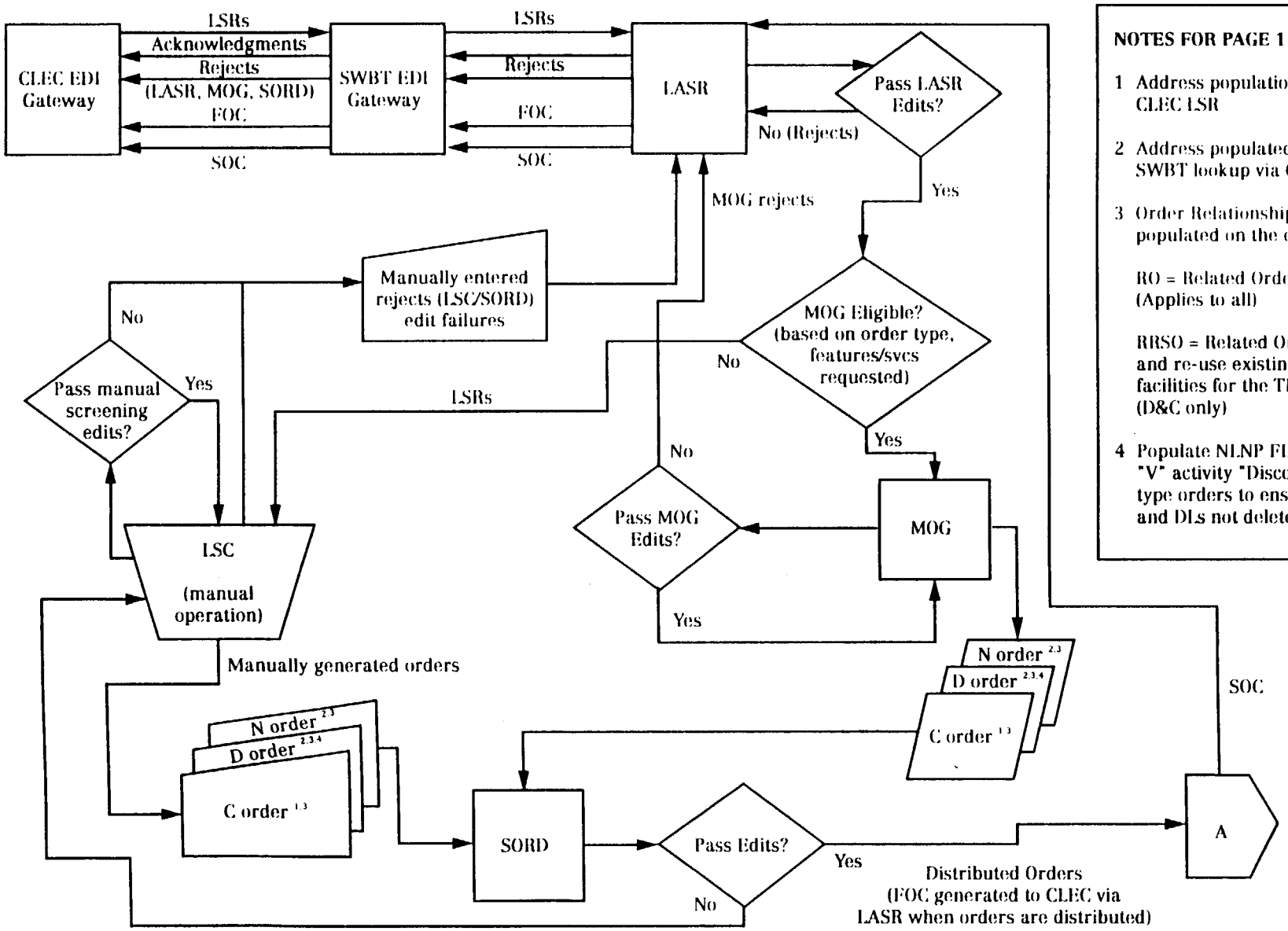

NOTES FOR PAGE 1

1 Address population from CLEC LSR

2 Address populated from SWBT lookup via CRIS

3 Order Relationship FIDS populated on the orders:

RO = Related Orders (Applies to all)

RRSO = Related Orders and re-use existing facilities for the TN (D&C only)

4 Populate NLNP FID on all "V" activity "Disconnect" type orders to ensure 911 and DLs not deleted.

SWBT UNE-P Migration Order Process

SWBT Retail/Resale to UNE-P

(Distribution thru Provisioning)

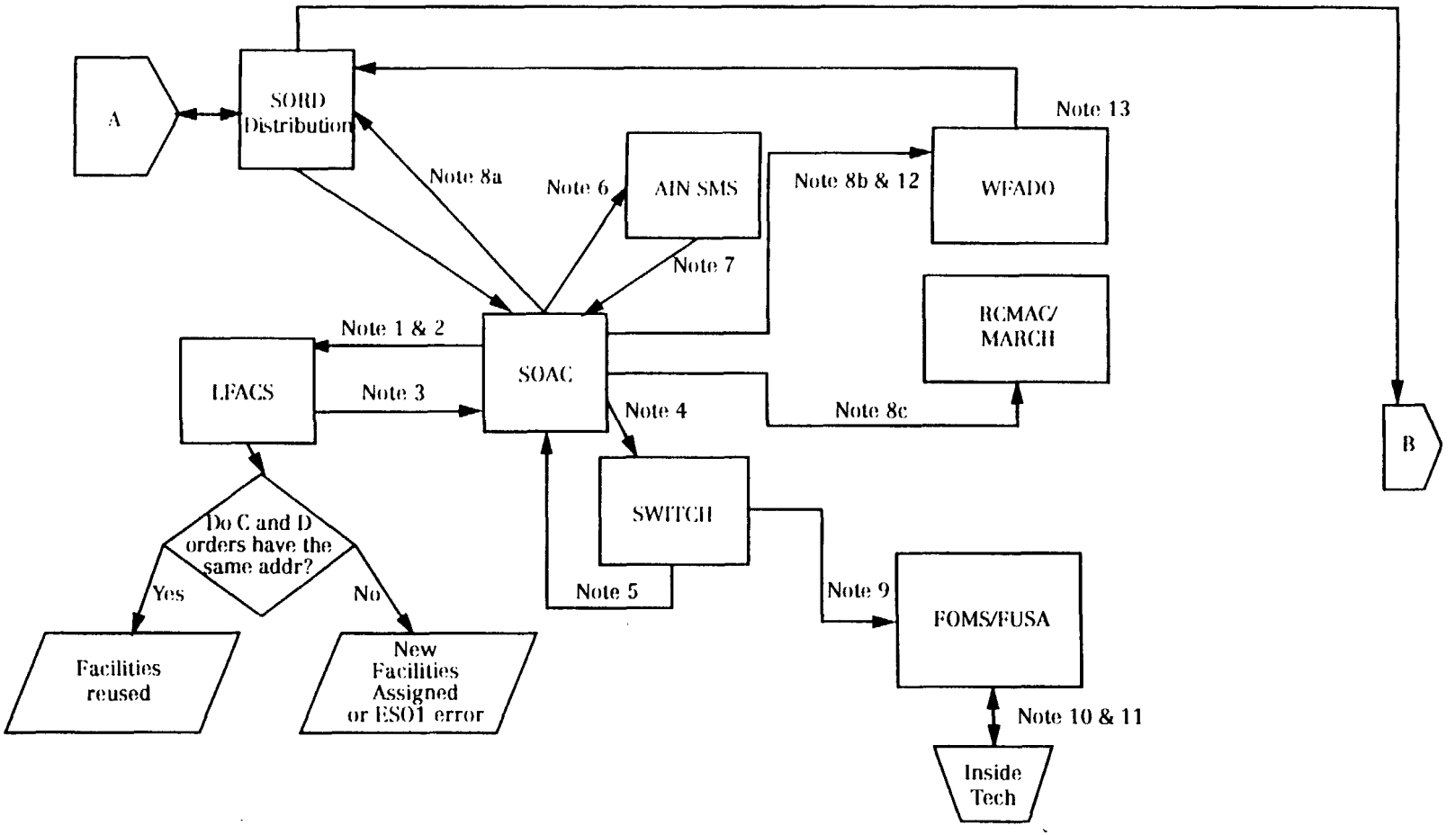

SWBT UNE-P Migration Order Process

SWBT Retail/Resale to UNE-P

(Notes for Page 2)

1. SOAC determines if facilities assignments are required. For the 'D' and 'C' orders for UNE-P, LFACs must reassign the facilities from the 'D' order to the 'C' order. The UNE-P 'N' order does not require facilities so it will flow directly to WFADO for auto completion on the due date.
2. The 'D' and 'C' order will carry the RRSO FID for reuse of facilities (see notes on the flowchart for additional information regarding different addresses).
3. LFACs sends the appropriate facility assignments to SOAC.
4. SOAC determines central office facilities are necessary and sends a request to SWITCH.
5. SWITCH sends the appropriate facility assignments to SOAC.
6. SOAC sends the order to AIN SMS for AIN triggers set.
7. SOAC broadcasts the assigned order information to downstream systems:
   a) SOAC sends the assignment image back to SORD.
   b) SOAC sends both a planning message to WFA/DO at initial receipt of order and an assignment message to WFA/DO once all assignments are made.
   c) SOAC sends the order to the MARCH system.
8. SWITCH sends the order information to FOMS/FUSA.
9. The inside technician picks up the order from FOMS/FUSA.
10. The technician completes the order to the FOMS/FUSA system when all work is completed.
11. WFA/DO makes determination if dispatch is required or not. Conversion as specified UNE-P orders do not require dispatch (If a different address is on the 'C' order than the 'D' order, a technician may be dispatched.). When it is determined that dispatch is not required, the WFA/DO will status the order to Pending Auto-completion (PAC) status. Automatic completion will occur on the due date.
12. WFA/DO will send completion message to SORD. This completion notification and completion distribution of the order in SORD will send the SOC to the CLEC via LASR.

SWBT UNE-P Migration Order Process

SWBT Retail/Resale to UNE-P

(Posting & Billing)

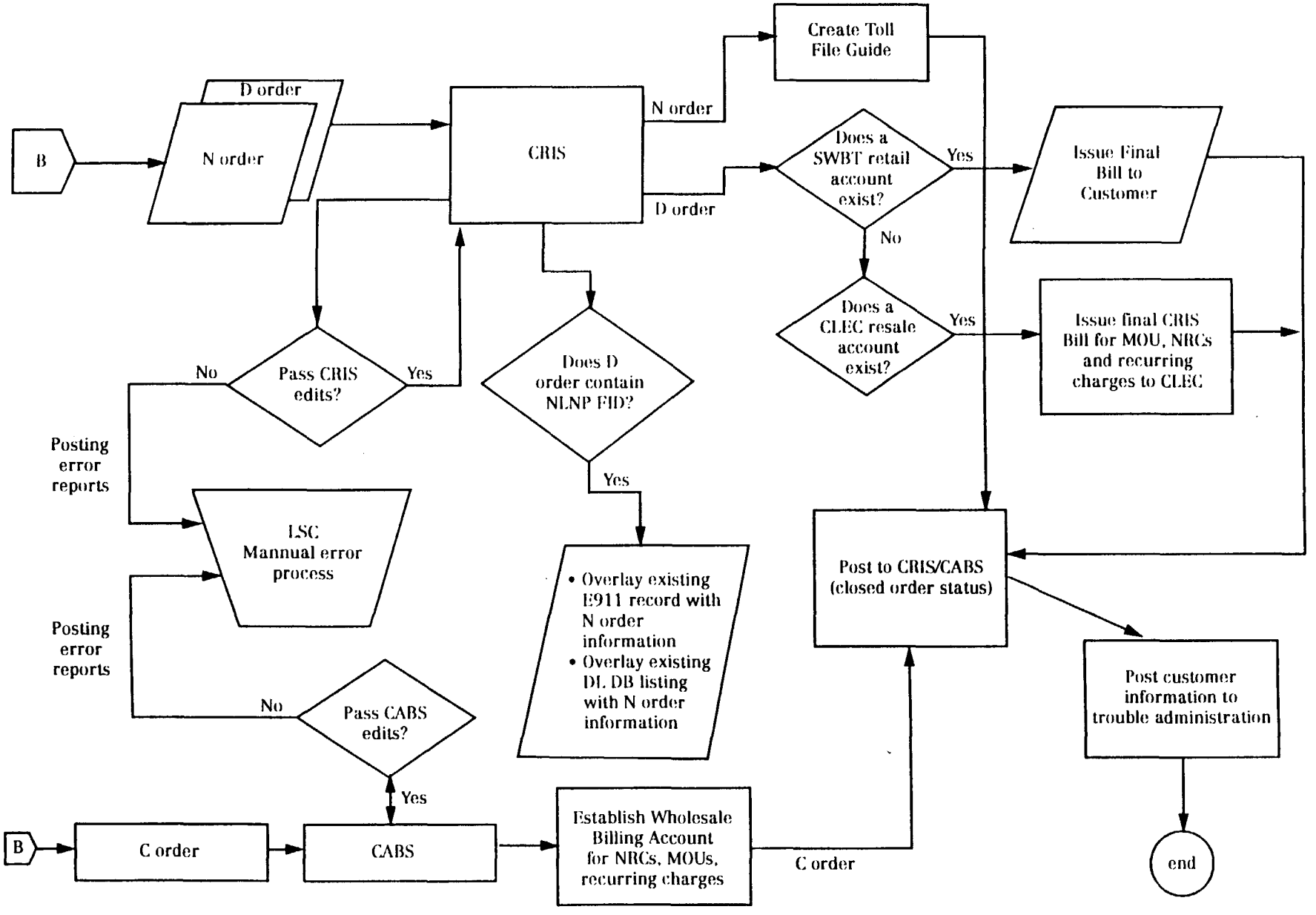

SWBT Migration Order Process

SWBT Retail/Resale to Loops

(EDI Gateway thru Order Creation)

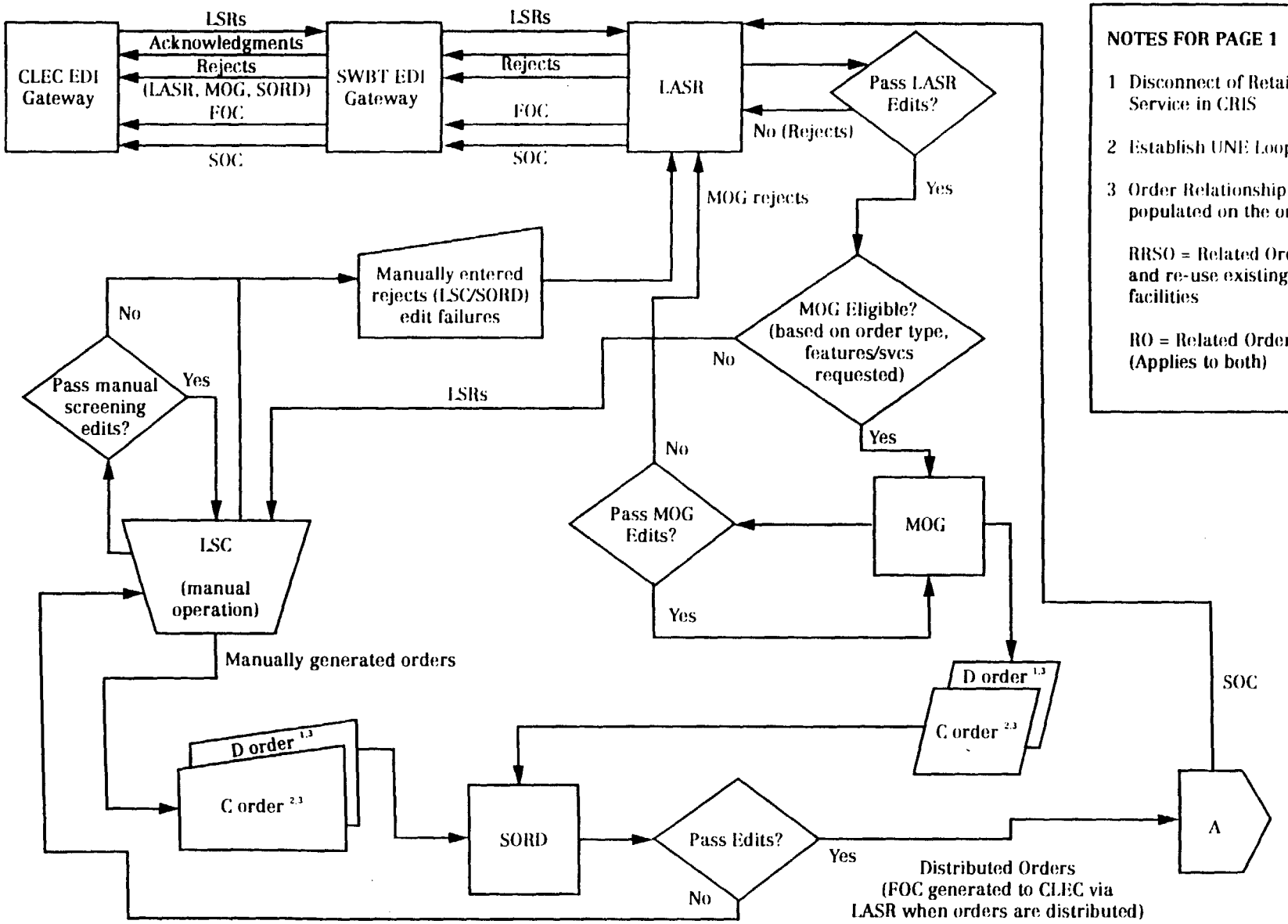

NOTES FOR PAGE 1

1 Disconnect of Retail/Resale Service in CRIS

2 Establish UNE Loop in CABS

3 Order Relationship FIDS populated on the orders:

RRSO = Related Orders and re-use existing facilities

RO = Related Orders (Applies to both)

SWBT Migration Order Process

SWBT Retail/Resale to Loops

(Distribution thru Provisioning)

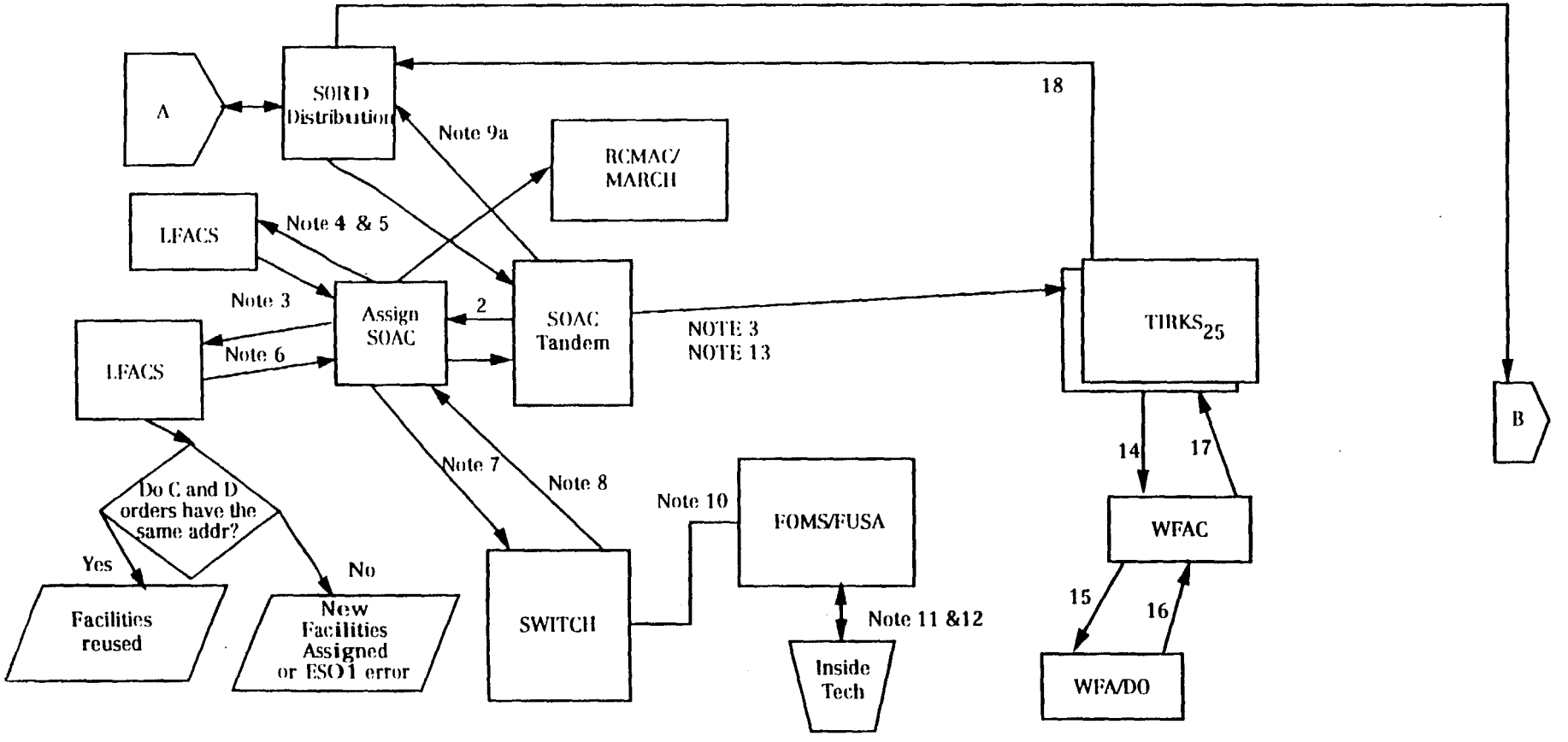

SWBT Migration Order Process

SWBT Retail/Resale to Loops

(Notes for Page 2)

1. SORD delivers the order to the Tandem SOAC for provisioning.
2. The Tandem SOAC determines which Assigning SOAC is involved with the order and sends a message to it.
3. The Tandem SOAC also sends Message 1 containing order logging information to the TIRKS® system (SOAC will send Message 2 containing design affecting information to TIRKS upon receipt of a positive acknowledgement for Message 1.)
4. SOAC determines if facilities assignments are required. For the 'D' and 'C' orders for UNE, LFACs attempts to reassign the facilities from the 'D' order to the 'C' order.
5. LFAC sends the appropriate outside plant facility assignments to its Assigning SOAC.
6. LFACs sends the appropriate facility assignments to SOAC.
7. SOAC determines central office facilities are necessary and sends a request to SWITCH.
8. SWITCH sends the appropriate central office facility assignments to the Assigning SOAC. Orders are set up to flow through without manual intervention.
9. SOAC broadcasts the assigned order information to downstream systems:

   a) SOAC sends the assignment image back to SORD.
10. SWITCH sends the order information to FOMS/FUSA.
11. The inside technician picks up the order from FOMS/FUSA.
12. The technician completes the order to the FOMS/FUSA system when all work is completed.
13. The Tandem SOAC sends Message 3 containing assignment information to TIRKS®.
14. TIRKS designs and issues the word document and forwards to WFA/C for assignment to a LOC Tester. If no outside plant facility won is required the tester completes the conversions and completes the order in WFA/C. (Go to 17). If facility work is required go to 15 and 16. In this case the LOC Tester coordinates activities between the SWBT Tech and the CLEC.
15. WFA/C logs the order and the service order data to WFA/DO.
16. WFA/DO assigns, loads, and dispatches the order to the technician. WFA/DO posts completion data back to WFA/C, after customer accepts the circuit.
17. WFA/C sends the completion notice to TIRKS.
18. TIRKS forwards completion and posting data to SORD.
19. Once the order is completed, it will post on a nightly posting cycle and will be updated into the CRIS or CABS database.

SWBT Migration Order Process

SWBT Retail/Resale to Loops

(Posting & Billing)

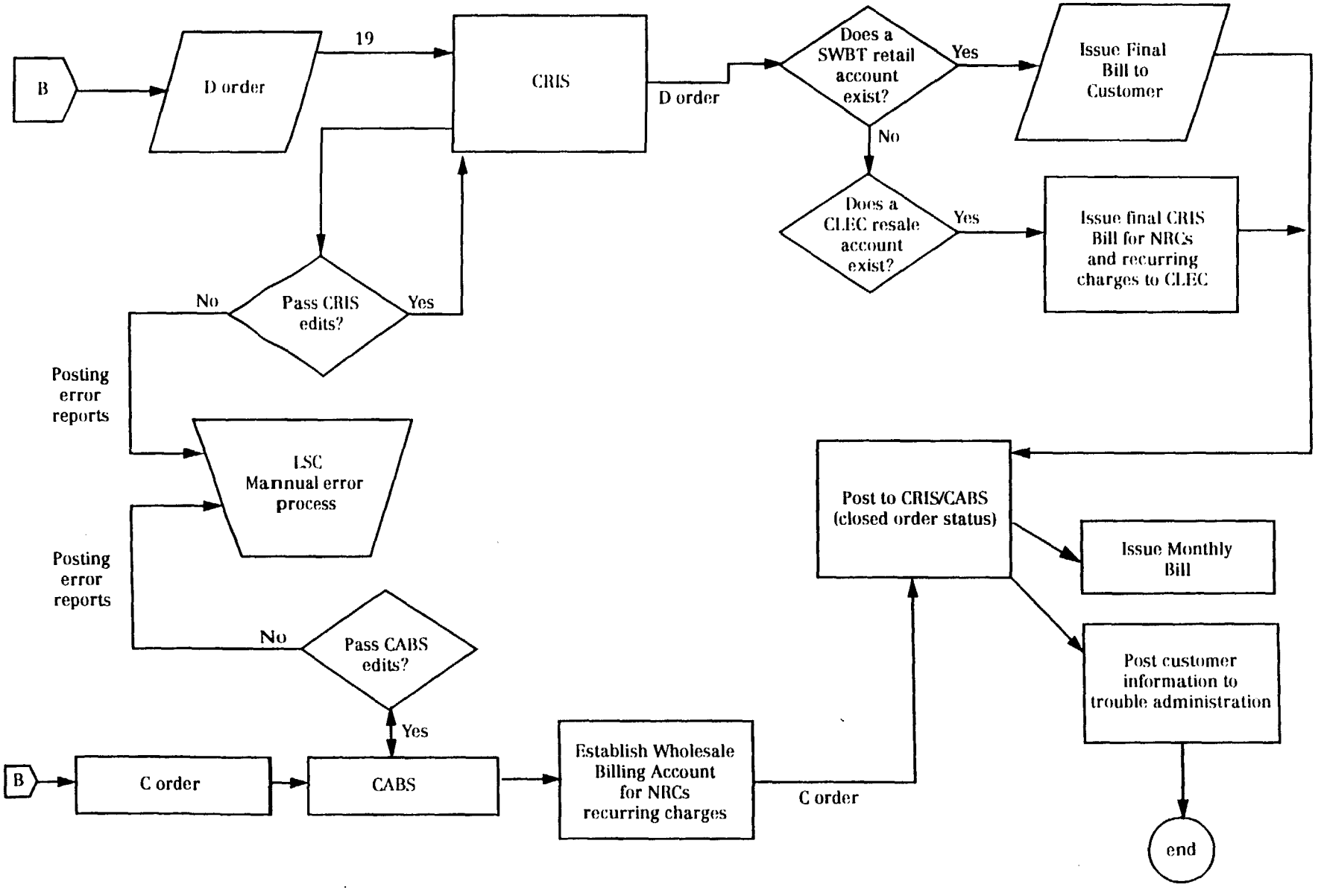

SWBT Migration Order Process

SWBT Retail/Resale to Loop with Number Portability

(EDI Gateway thru Order Creation)

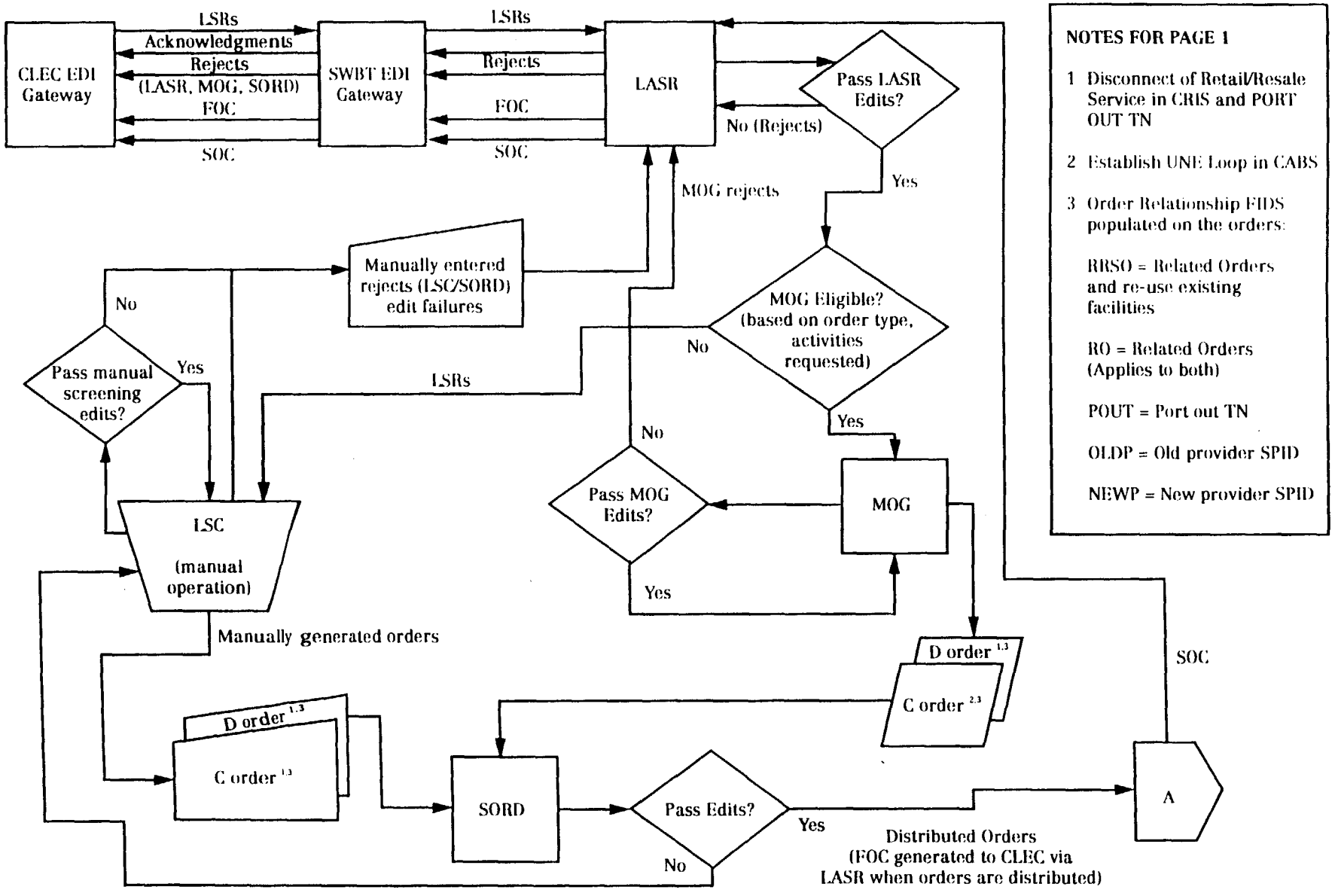

NOTES FOR PAGE 1

1 Disconnect of Retail/Resale Service in CRIS and PORT OUT TN

2 Establish UNE Loop in CABS

3 Order Relationship FIDS populated on the orders:

RRSO = Related Orders and re-use existing facilities

RO = Related Orders (Applies to both)

POUT = Port out TN

OLDP = Old provider SPID

NEWP = New provider SPID

SWBT Migration Order Process

SWBT Retail/Resale to Loop with Number Portability

(Distribution thru Provisioning)

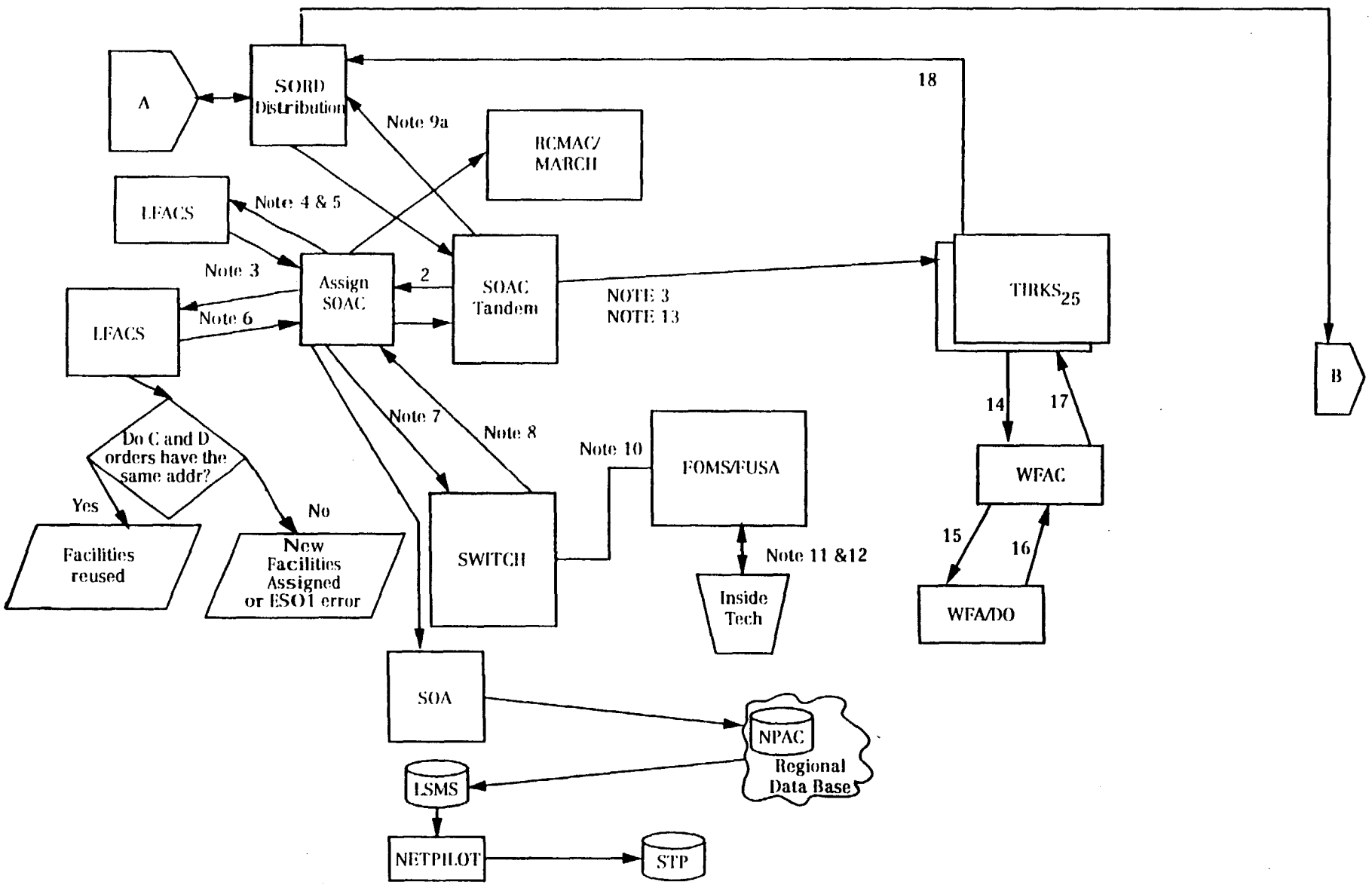

SWBT Migration Order Process

SWBT Retail/Resale to Loop with Number Portability

(Notes for Page 2)

1. SORD delivers the order to the Tandem SOAC for provisioning.
2. The Tandem SOAC determines which Assigning SOAC is involved with the order and sends a message to it.
3. The Tandem SOAC also sends Message 1 containing order logging information to the TIRKS® system (SOAC will send Message 2 containing design affecting information to TIRKS upon receipt of a positive acknowledgement for Message 1.)
4. SOAC determines if facilities assignments are required. For the 'D' and 'C' orders for UNE-ISDN, LFACs attempts to reassign the facilities from the 'D' order to the 'C' order.
5. LFAC sends the appropriate outside plant facility assignments to its Assigning SOAC.
6. LFACs sends the appropriate facility assignments to SOAC.
7. SOAC determines central office facilities are necessary and sends a request to SWITCH.
8. SWITCH sends the appropriate central office facility assignments to the Assigning SOAC. Orders are set up to flow through without manual intervention.
9. Assigning SOAC broadcasts the assigned order information to downstream systems. MARCH, SOA sends porting request information to RSMS NPAC:
   a) Assigning SOAC sends the assignment image back to TANDEM SOAC.
10. SWITCH sends the order information to FOMS/FUSA.
11. The inside technician picks up the order from FOMS/FUSA.
12. The technician completes the order to the FOMS/FUSA system when all inside work is completed.
    a) NPAC broadcasts ported information to all Regional local SMS databases (LSMS).
    b) LSMS sends ported information to NET Pilot.
    c) NET Pilot sends ported records to STP for new routing.
13. The Tandem SOAC sends Message 3 containing assignment information to TIRKS® and sends assignment image back to SORD.
14. TIRKS designs and issues the word document and forwards to WFA/C.
15. WFA/C logs the order and the service order data to WFA/DO.
16. WFA/DO assigns, loads, and dispatches the order to the technician. WFA/DO posts completion data back to WFA/C, after customer accepts the circuit.
17. WFA/C sends the completion notice to TIRKS.
18. TIRKS forwards completion and posting data to SORD.
19. Once the order is completed, it will post on a nightly posting cycle and will be updated into the CRIS or CABS database.

SWBT Migration Order Process

SWBT Retail/Resale to Loop with Number Portability
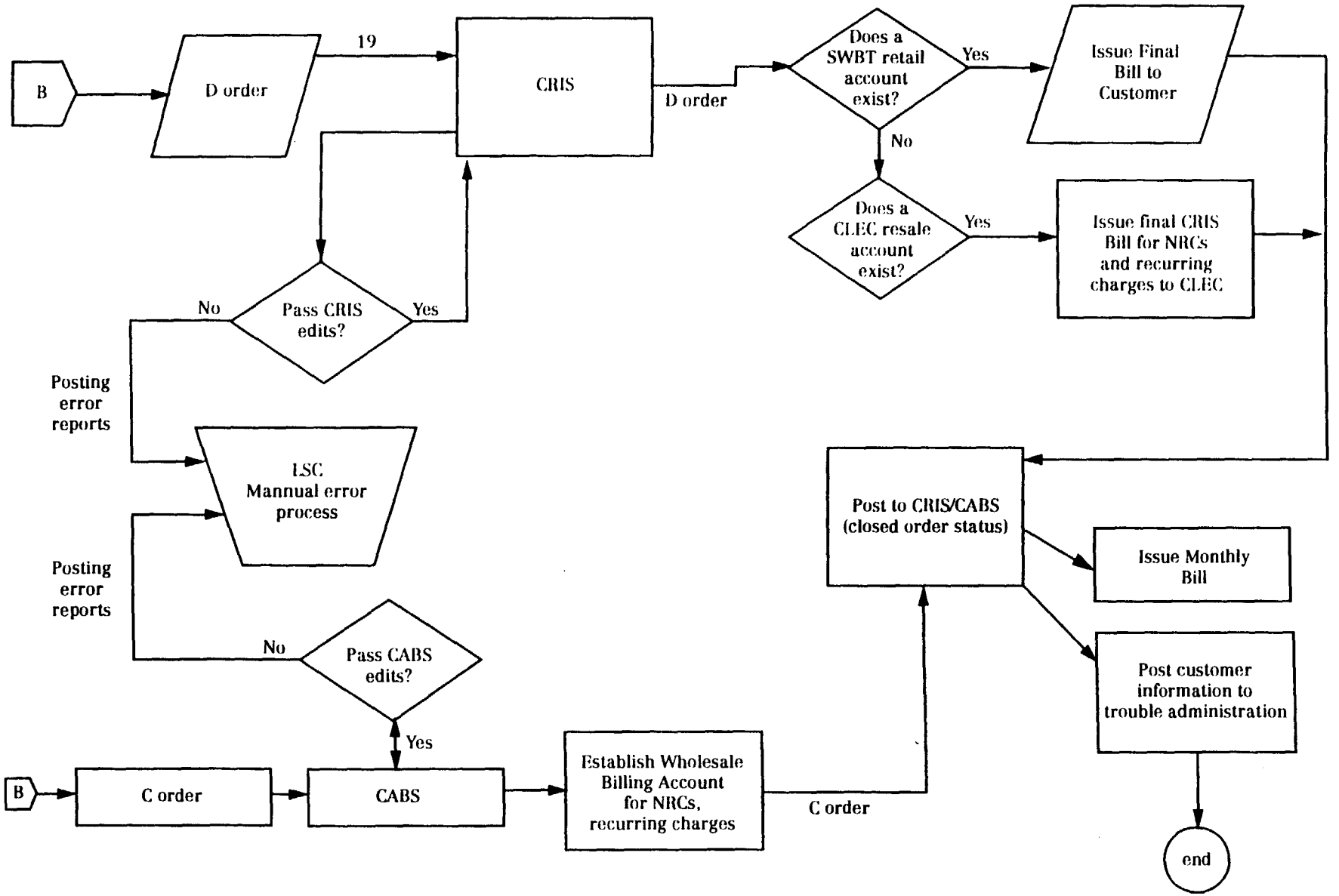
(Posting & Billing)