ORIGINAL

intersil

EX PARTE OR LATE FILED

February 17, 2000

RECEIVED

FEB 17 2000

FEDERAL COMMUNICATIONS COMMISSION
OFFICE OF THE SECRETARY

VIA COURIER

Magalie Roman Salas, Esq.
Secretary
Federal Communications Commission
445 Twelve Street, S.W., Room TWB204
Washington, D.C. 20554

Re: Intersil Corporation
***Ex Parte* Presentation**
Amendment of Part 15 of the Commission's Rules Regarding Spread Spectrum Devices, ET Docket No. 99-231

Dear Ms. Salas:

Intersil Corporation ("Intersil"), pursuant to Section 1.1206 of the Commission's Rules, is writing to report an oral *ex parte* presentation with Commission staff at the Office of Engineering and Technology regarding the above-referenced matter. Present at the meeting were Jim Zyren of Intersil, Catherine Wang and Nancy Killien Spooner of Swidler Berlin Shereff Friedman, Karen Rackley, Chief of the Technical Rules Branch, John Reed, and Neal McNeil.

During the meeting, Intersil submitted a written *ex parte* communication, a copy of which is attached to this letter. The original and one copy are enclosed for filing in the above-referenced proceeding. Intersil previously submitted comments and reply comments in this proceeding.

Please date-stamp the extra copy of this letter and return it in the enclosed envelope. If you have any questions regarding this filing, please contact James Zyren at (407) 729-4177.

Very truly yours,

Larry Ciaccia
Vice President, Engineering
Intersil Corporation
2401 Palm Bay Road
Palm Bay, FL 32903

No. of Copies rec'd 0+1
List A B C D E

Agenda

intersil

- Commission's Previous Rulings & Comments
- FCC Precedent on Overlapping FHSS Channels
- FCC's Previous Rejection of Linear Power Reduction
- WBFH Receiver Performance Counts
- Technical Discussion: Overlapped FHSS Channels

Previous Rulings & Comments

intersil

- Two Basic Questions
  - **What is the basis for the current regulations?**
  - **Is it a good idea to change them?**

- What does the Record show?
  - **Comments from previous proceedings**
    - comments/rulings on overlapped channels, linear power reduction, and FHSS receiver performance
  - **ET Docket 99-231**
    - No discussion of basis for existing rules
    - Seriously flawed technical discussion from proponents of WBFH

Overlapping FHSS Channels

intersil

- Current regulations prohibit overlapped channels
  - **FCC 15.247(a)(1):**

    "Frequency hopping systems shall have hopping channel carrier frequencies separated by a minimum of 25 kHz or the 20 dB bandwidth of the hopping channel, whichever is greater."

  - **Basis**
    - FM receivers emphasize interference located at channel edge

Overlapped Channels

intersil

- Previous FHSS proceeding in 915 MHz band
  - **NPRM, 4 FCC Rcd 6370 (1989), at 6374, n.9**
    - *"Increasing the channel width will require a concomitant change in the minimum number of hopping frequencies from 75 to 50 for systems operating in the 902 - 928 MHz band."*
  - **Report & Order, 5 FCC Rcd 4123 (1990) at ¶ 18**
    - *"To accommodate the increased channel bandwidth in the 902-928 MHz band and still retain the nonoverlapping channel requirement, the required number of hopping frequencies for systems using this band was proposed to be reduced from 75 to 50."*

Linear Power Reduction

intersil

- FCC previously rejected linear power reduction
  - **WBFH Symbol Petition, NPRM, 11 FCC Rcd 3068 (1996) at ¶ 23:**
    - *"We have **serious concerns** that implementing Symbol's requested change could result in **severe** increases in the potential for harmful interference. While this increased interference potential could be partially offset by a reduction in output power of the frequency hopping transmitters, **we are not convinced** that a linear power reduction alone is sufficient to offset this interference potential."*

Linear Power Reduction

intersil

- **915 MHz proceeding, Report & Order, 12 FCC Rcd 7488 (1997) ¶ 26:**
  - *"The formula developed by TIA Wireless indicates that a frequency hopping system using 25 hopping channels should have a transmitter output limit of 250 mW in order for the interference potential to be no greater than that of a 50 channel system operating with a transmitter power of 1 W."*
  - FCC adopted power reductions proportional to $\geq$ *square* of the reduction in the number of nonoverlapped channels

WBFH Receiver Performance

intersil

- Commission has recognized the importance of FHSS receiver performance
  - **Widened FHSS Channels, Report & Order, 5 FCC Rcd 4123 (1990) at ¶ 26:**
    - *"We agree that it is necessary to treat frequency hopping transmitters and receivers as a system in order to ensure that the spectrum efficiencies made possible through true spread spectrum operations are in fact achieved. We therefore are specifying certain basic standards for frequency hopping receivers."*
  - **Current Commission FHSS Section 15.247:**
    - *"The system receivers shall have input bandwidths that match the hopping channel band widths of their corresponding transmitters . . . ."*

WBFH Receiver Performance

intersil

- DSSS receivers must pass a performance test in order to obtain FCC authorization
- The other main issue *in this NPRM* deals exclusively with DSSS receiver performance test methodology
- WBFH Receiver performance is highly relevant

To sum it up...

intersil

- Commission's comment on previous FHSS proposal still relevant
  - **NPRM, 11 FCC Rcd 3068 (1996), at ¶ 23:**
    - *"Normally, the Commission seeks to encourage new uses of the spectrum. However, in this case we feel that the large increase in the proliferation of these transmitters from additional consumer applications, combined with the smaller number of hopping channels, an increased bandwidth, and increase in average channel occupancy time, and, in some cases, a higher effective radiated power, would result in a significant increase in the probability that harmful interference will occur to other radio operators in these bands."*

Technical Discussion

intersil

- Effects of Overlapped FHSS Channels
  - **FM demodulation emphasizes effect of interference in proportion to square of frequency offset**
    - does not depend on FM implementation
    - does not depend on high SIR
  - **CUBE criticisms of Intersil results are incorrect**
    - Intersil results agree with ***measured*** data
    - Intersil results have been independently confirmed by Silicon Wave
    - Intersil simulations include the effects of channel filtering
    - Intersil results are consistent with closed form analysis

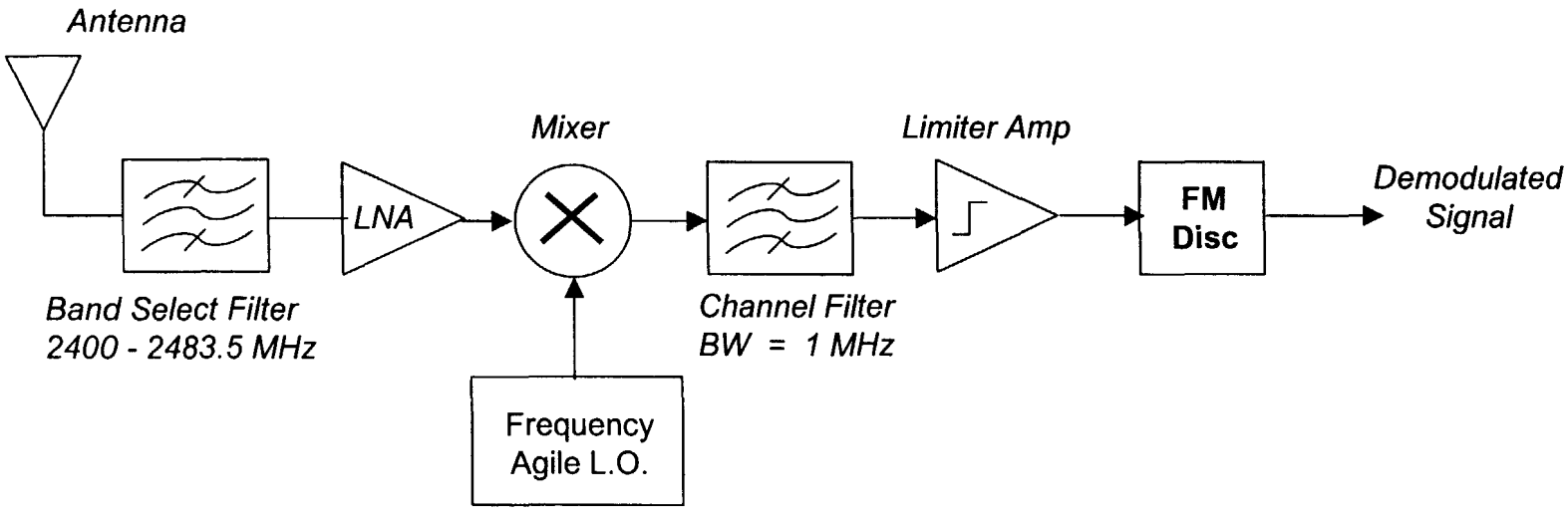

Figure 1 Basic FHSS Receiver Chain

Zero Crossings

intersil

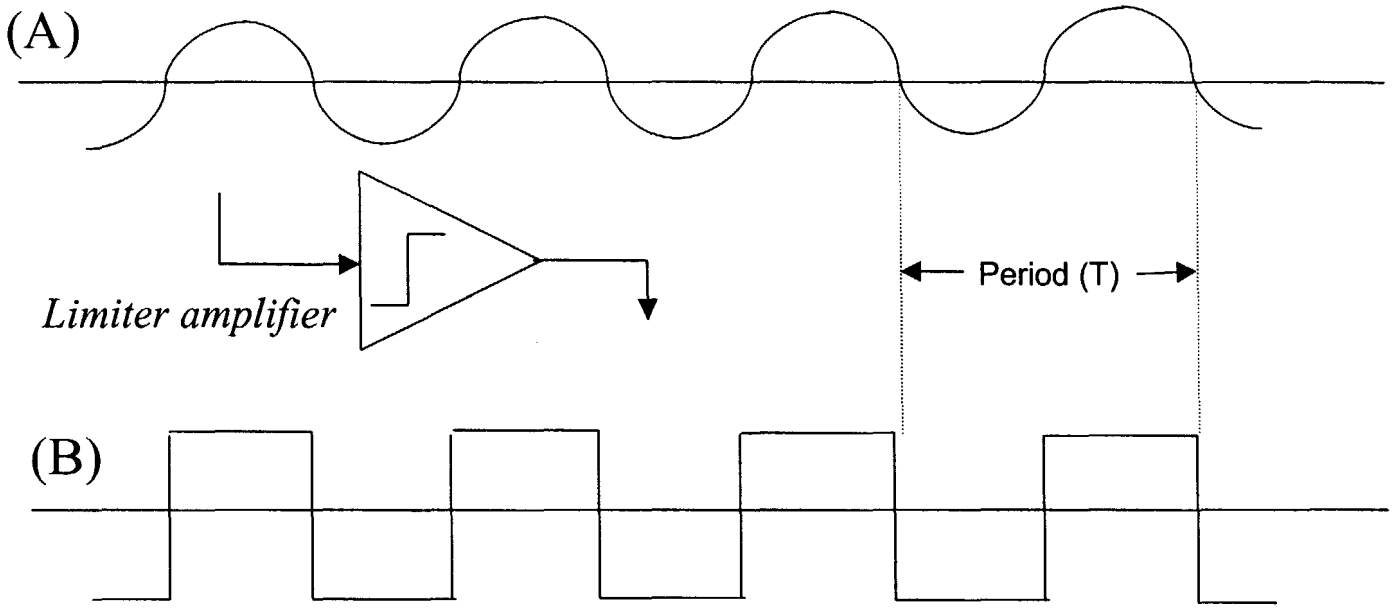

Figure 2 Limiter Converts Sine Wave into Square Wave

- Intersil simulations used a complex baseband representation (A)
- Other implementations may use zero crossing detector. Limiter amplifier results in a square wave (B).
- In either case, resulting waveform is constant amplitude. Both (A) and (B) preserve instantaneous frequency information.
- Both approaches are mathematically equivalent. Complex baseband method is a well established modeling technique which facilitates computer simulation.

Effect of Frequency Offset (Simplified Approach)

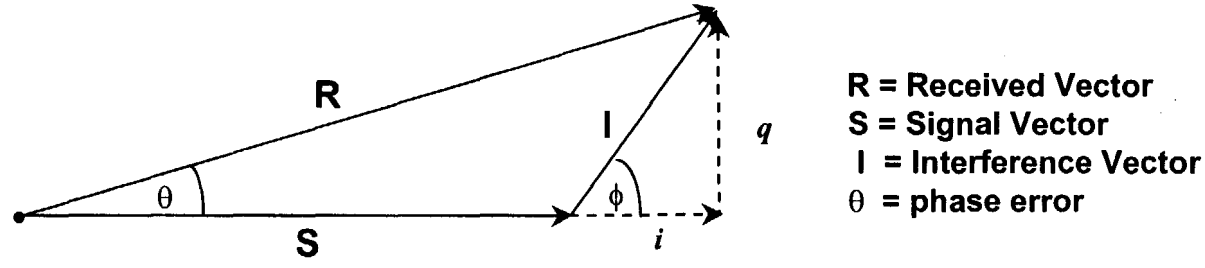

Figure 3 Linear Combination of Signal (S) and Interference (I) Before Limiter

Frequency offset between signal (S) and interference (I) = Δf, and $\omega = 2\pi\Delta f$. Therefore:

$$i(t) = I\sin(\omega t), \text{ and } q(t) = I\cos(\omega t)$$

Phase error = $\theta(t)$:

$$\theta(t) = \tan^{-1}\left[\frac{q(t)}{S + i(t)}\right]$$

Most text books simplify analysis by assuming a high SIR (S >> I). Under this condition:

$$\theta(t) \approx \tan^{-1}\left[\frac{q(t)}{S}\right] \approx \frac{q(t)}{S}$$

Frequency error $= \dfrac{d\theta(t)}{dt}$:

$$\frac{d\theta(t)}{dt} \approx \frac{1}{S}\frac{d\sin(\omega t)}{dt}$$

This approach requires a high SIR to be valid. However, this is ***NOT*** *the general case, and it is* ***NOT*** *the approach Intersil used in analyzing this issue.*

Effect of Frequency Offset (General Case)

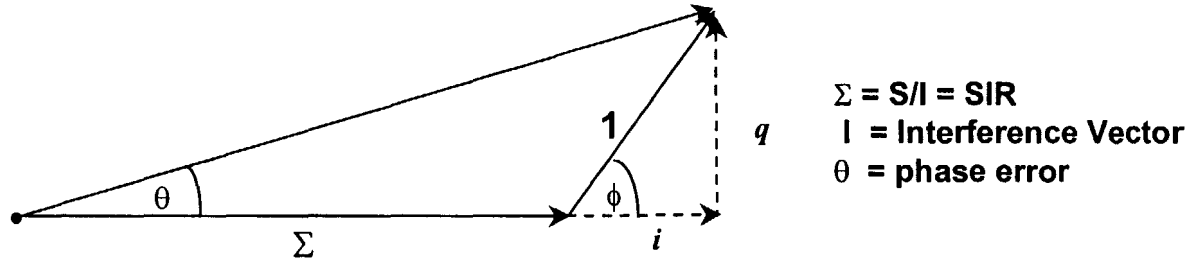

Figure 4 Linear Combination of Signal (S) and Interference (I) Before Limiter

Normalize vector amplitudes to interference vector I. Therefore, the interference vector (I) is 1, and the signal vector is expressed in terms of SIR (S/I). Then:

$$i(t) = \sin(wt), \text{ and } q(t) = \cos(wt)$$

Phase error = θ(t):

$$\theta(t) = \tan^{-1}\left[\frac{\sin(\omega t)}{\Sigma + \cos(\omega t)}\right]$$

In the general case, no assumption is made regarding SIR. Under this condition:

$$\text{Frequency error} = \frac{d\theta(t)}{dt} = \left[\frac{\omega(\Sigma\cos(\omega t)+1)}{\Sigma^2 + 2\Sigma\cos(\omega t) + 1}\right]$$

Noise voltage at the discriminator output is directly proportional to offset frequency (w), and noise power at the discriminator output is proportional to the square of frequency offset.

This approach does NOT require a high SIR to be valid. SIR is not assumed to be large. In fact, SIR is a parameter in the final expression for frequency error. In conclusion: the increase in noise power at the discriminator output in proportion to the square of frequency offset does not depend on a high SIR.

Measured Data

intersil

- Intersil Results are Consistent with Measured Data
  - **Intersil analysis and simulations performed to investigate effects noted in measured data**
    - Aironet receiver desense data presented in FCC submission of Sept. 3, 1999.
  - **Intersil findings independently confirmed by Silicon Wave**
    - Silicon Wave has confirmed Intersil's results regarding interference between WBFH and Bluetooth devices.
    - Silicon Wave results are based on both simulations and measured data

IF Filter / Channel Filter

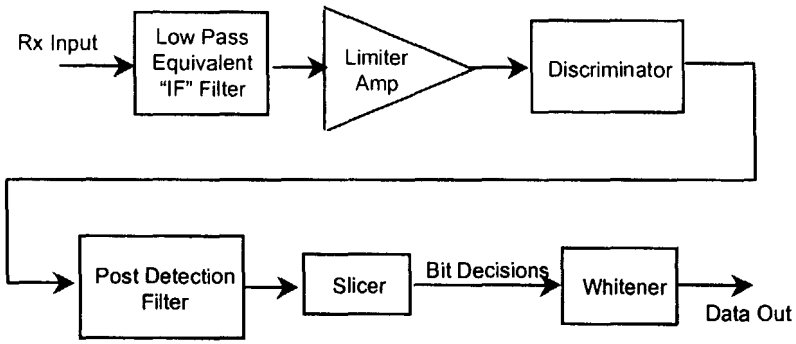

Figure 5 Non-Coherent FSK Receiver Model

- CUBE asserted that Intersil models did not include IF filter
- CUBE claim is ***EXTREMELY MISLEADING***
- Main function of the IF filter is to provide channel filtering (passes center channel, rejects other channels)
- Some receivers use a Zero IF design. In other words, desired signal is converted to a rather than an IF filter.
- For Zero IF receivers, channel filtering is done via a low pass filter.
- IF filter in "conventional" receiver and low pass filter in Zero IF receiver are functionally equivalent.
- The Intersil model was a complex equivalent baseband model. Channel filtering was performed by a low pass filter, which *IS* an effective channel filter.

Conclusions

intersil

- Overlapped Channels prohibited by ETSI and current FCC regulations
  - **this prohibition has a sound engineering basis**
    - FM demodulation emphasizes interference at band edge
    - overlapping channels places interference precisely where FHSS radios are most vulnerable
  - **the record simply does not support adoption of overlapping FHSS channels**
    - HomeRF/CUBE has presented NO DATA demonstrating feasibility of this measure
  - **Other issues**
    - Increased minimum hop rate, proposed power reductions
- Record Does Not Support Adoption of WBFH