BROADBAND INTERCONNECTION -

an Industry Consultation Paper

issued by the Office of the Telecommunications Authority

3 November 1999

Part I - Whether Regulation is Necessary?

1. Introduction

1.1 As Hong Kong develops into a high value-added and knowledge-based economy, the traditional narrowband telecommunications infrastructure can no longer cope with the increasing demand for the transmission of huge volumes of information at high speeds and real-time exchange of multimedia data streams. It is the aim of the Government to promote investment in broadband telecommunications infrastructure and to facilitate access to such infrastructure for the provision and use of broadband services.

1.2 The promotion of investment in "high capacity communications systems" (which essentially comprises the broadband telecommunications infrastructure) is a critical part of the "Digital 21" Information Technology (IT) strategy formulated by the Information Technology and Broadcasting Bureau (ITBB). It is one of the "enabling factors" identified by the Chief Executive in his 1997 Policy Address which would "make Hong Kong a leader, not a follower, in the information world of tomorrow".

1.3 In pursuing these policies, the key objectives of the Government on broadband services are as follows:

(a) to promote investment in broadband infrastructure, as the infrastructure is the backbone of the telecommunications and information technology industries underpinning the service sector of Hong Kong;

(b) to promote effective competition and consumer choice at affordable prices, through ensuring unrestricted access to, and interconnection between, broadband telecommunications networks;

(c) to maintain a fair and competitive market environment in broadband services, through transparent and non-discriminatory interconnection arrangements (whether they are achieved preferably through commercial negotiations or determination by the Telecommunications Authority with his reserved powers); and

(d) to promote inter-operability between broadband services provided by different service providers in order to enhance competition and consumer choice.

1.4 Pro-competition and pro-consumer policies have served us well in regulating the narrowband telecommunications market, and will be extended to the broadband market. However, in promoting more effective competition in the broadband market, we must also ensure that there are adequate commercial incentives to induce the network operators to continue to invest in and roll out the broadband infrastructure, having due regard to the risk and uncertainties in future demand. The regulatory framework therefore has to strike a proper balance between the promotion of service competition over broadband networks and the creation of an environment conducive to continued investment in the broadband infrastructure.

1.5 One of the important objects covered by this consultation paper will therefore be the proper balance between necessary regulation to promote competition and choice on the one hand, and the creation and preservation of commercial incentives in investment in the broadband infrastructure on the other. Two key questions need to be addressed. First, whether regulatory intervention is necessary, and (second), if so, what form of regulation is warranted.

1.6 Another key object of this consultation paper is to seek comments on the principles and costing standard for the determination of interconnection charges, which would meet the objectives outlined above.

2. The Broadband Infrastructure

2.1 We envisage that the broadband infrastructure of Hong Kong in the information age will consist of multiple broadband networks. For the purpose of discussing the appropriate regulatory framework, each broadband network can be divided into the "core (backbone) network" and the "access network(s)". The "core networks" will provide the high capacity switching and trunk transmission, both within Hong Kong and to/from places outside Hong Kong. Examples of the "core networks" will be the optical fibre cable and switching systems using the Internet or Asynchronous Transfer Mode (ATM) protocols. End-users and service providers will gain access to the core networks through a variety of "access networks". Examples of access networks will include the local loops (based on copper wires) using the digital subscriber line (DSL) technologies, fibre-to-the-basement technologies, hybrid fibre coaxial cable systems, wireless local fixed networks (including Local Multipoint Distribution Systems (LMDS) based on microwave transmissions) and satellite based networks. Subject to licensing, the cable television network operated by the subscription television broadcasting licensee can also be used as an "access network" for connection of end users to the core networks. There will be interconnection between core networks, between core networks and access networks, and between service providers and the core/access networks. Figure 1 is a diagrammatic illustration of the broadband network infrastructure and the types of interconnection envisaged.

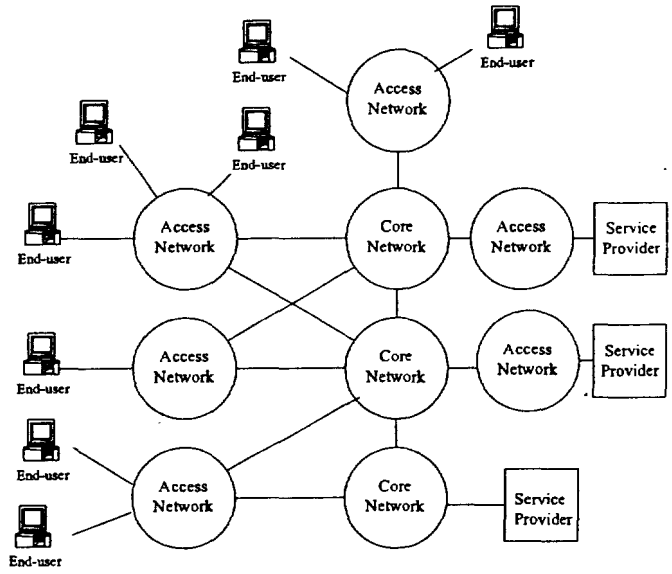

Figure 1

2.2 In a multiple network environment, interconnection between networks is of critical importance to promoting access and choice. To end users, they demand nothing less than unrestricted access to services of their choice. To service providers, unrestricted access to the infrastructure and to their customers means that they would be encouraged to develop their business over the infrastructure to reach their customers. Access and choice are therefore essential ingredients for fostering effective competition. Through effective competition, prices would be lowered and the quality of services would be improved.

2.3 Interconnection between networks at the core network level promotes access and choice by -

(a) enabling end users connected to one network to communicate with end users connected to other networks; and

(b) enabling end users connected to one network to be able to access services connected to other networks, thus increasing choice.

2.4 Interconnection at the access network level enables end users and service providers to gain access to the network infrastructure through a choice

of access networks, overcoming any restrictions on access and choice as a result of non-availability of certain access networks to end users at certain locations due to physical or other constraints. Interconnection at the access network level would also minimise unnecessary duplication or idling of network facilities, thus ensuring that telecommunications services would be provided to end users in a more economical manner.

2.5 Interconnection with service providers ensures that the service providers can reach their customers through the networks. They would then have more incentive to market their services and information using the networks. The availability of more innovative services and content over the infrastructure will also promote Hong Kong as a traffic and content centre as well as a high-value added service centre.

3. Existing Regulation on Interconnection

3.1 The existing regulatory framework for interconnection is based on section 36A of the Telecommunication Ordinance (the Ordinance) under which the Telecommunications Authority (TA) may determine the terms and conditions of agreements for interconnection between any telecommunications systems and services licensed or exempted from licensing under the Ordinance. The terms and conditions which may be determined by the TA under section 36A of the Ordinance include technical and commercial conditions. For example, the location for the point of interconnection and the interconnection charges may be determined under section 36A. Under section 36B of the Ordinance, the TA may issue directions requiring systems and services to be interconnected. It has been the Government's policy to encourage commercial settlement of interconnection issues and the powers of the TA are exercised only in the public interest, for example, if commercial agreement cannot be reached within a reasonable time.

3.2 The introduction of fixed telecommunications network services (FTNS) competition on 1 July 1995 required the resolution of a number of complex technical and commercial issues concerning interconnection. To assist in the resolution of some of these issues and to facilitate commercial negotiations on these and related matters in the years ahead, the TA published a series of Statements on interconnection and related competition issues. A total

of ten Statements were published within the period from 28 March 1995 to 21 June 1995. Upon request by the FTNS operators, the TA conducted a review of Statement No. 7 entitled "Carrier-to Carrier Charging Principles" and issued a revised Statement on 18 November 1997.

3.3 The series of TA Statements setting out the regulatory framework for interconnection were formulated largely with the narrowband services in mind. Therefore with the development of broadband services, it has been necessary for the TA to review these statements, leading to the publication of two additional statements, one in July 1997 and another in April 1999, to address the issues of the extent to which the rules for narrowband interconnection may be directly applied to broadband services.

3.4 For the licensing of the video-on-demand (VOD) service, the TA issued a Statement on 16 July 1997 setting out his position regarding the regulatory framework for interconnection for broadband conveyance services (the 1997 Statement).

3.5 Paragraph 6 of the 1997 Statement stipulates that

> " *Type II interconnections are available for the existing narrowband network (see TA's Statement No. 6 on "Interconnection Configurations and Basic Underlying Principles" dated 3 June 1995 in the series "Interconnection and Related Competition Issues"). The TA recognizes that investment in a broadband network is a risky investment because of the uncertainty in future demand. To entertain requests for Type II interconnection from its competitors immediately after an operator has decided to invest in the new broadband infrastructure would mean that the operator which installs the infrastructure is bearing the full risks, with its competitors seeking interconnection only when customer demand exists. This does not appear to the TA to be an equitable arrangement and this would seriously undermine the commercial incentive for the operator to take the commercial risk of making an investment in the infrastructure for the broadband services. Thus the TA would not consider making a determination for Type II interconnection for certain types of*

The service is called the "programme services" under the Television Ordinance (Cap. 52).

infrastructure for broadband conveyance services within three years of commencement of operation of the services:

(1) optical fibre cables for the broadband conveyance services between local exchanges and the equipment rooms in buildings where customers reside;

(2) copper cables within buildings between equipment rooms in buildings where customers reside and the customers' premises where

(a) such cables are newly installed for the broadband conveyance services; and

(b) such cables do not constitute "bottleneck" facilities in the buildings concerned (e.g. the copper cables for the telephone services are still available for Type II interconnection);

(3) electronics equipment for the conveyance of broadband services over optical fibre cables or copper cables (since such electronics equipment do not constitute "bottleneck" facilities as they can readily be provided by the competing operator)."

3.6 The residential cell relay service (the CRS), which is a tariffed broadband conveyance service of Cable & Wireless HKT Telephone Limited (CWHKTT, previously called Hong Kong Telephone Company Limited), was officially launched in March 1998. Therefore, according to the 1997 Statement, the TA should not consider making a determination for Type II interconnection for the types of infrastructure listed in the preceding paragraph for the CRS of CWHKTT before February 2001. However, this restriction does not apply to the interconnections to CWHKTT's network infrastructure outside those listed above, for example, to interconnections between core networks or to the "old" copper wirings in the narrowband Public Switched Telephone Network (PSTN).

3.7 On 14 April 1999, the TA issued a Statement on the narrowband Type II interconnection between CWHKTT and New World Telephone Limited. The TA has limited the scope of that Statement to Type II interconnection up to the basic ISDN rate i.e. 144 kbps. The TA considered that any requirement for other kinds of services above the basic ISDN rate using existing copper local loops should be the subject of a separate agreement between the parties concerned or a separate determination if requested. The TA wishes to issue guidelines on this kind of broadband Type II interconnection after consulting the industry.

4. Current Status of Broadband Infrastructure Development and Imminent Developments

4.1 Despite the licensing of four fixed telecommunications networks since July 1995, as of the issue of this consultation paper, there is only one operator, namely CWHKTT, which provides broadband conveyance services for telecommunications signals to end-customers, particularly residential users, in a significant way. The other three fixed network operators (namely, Hutchison Communications Ltd., New World Telephone Ltd. and New T & T Hong Kong Ltd.) have built substantial broadband backbone networks, but have yet to roll out their customer access networks or make arrangements for customer access on a wide enough scale to be able to offer alternative broadband conveyance services to a significant number of end user customers. A summary of the existing broadband conveyance services is shown in Annex 1.

4.2 The Government wishes to promote investment in the broadband infrastructure and the provision of choice in broadband services. We have therefore issued invitations for the provision of broadband infrastructure using various technologies. For example, subject to satisfactory commitments on the rollout of the optical fibre network and the return of frequencies of Microwave Multipoint Distribution System (MMDS), Hong Kong Cable Television Limited (HKCTV), the only terrestrial subscription television broadcasting service provider at present, will be licensed to provide broadband telecommunications services over its cable television network. On 15 July 1999, OFTA issued a Guidance Note inviting applications for licences to operate local wireless fixed network services using wireless local loops and

LMDS technologies operating in the microwave frequency bands. In addition, the licences for Satellite Master Antenna Television systems have been amended to permit downloading of telecommunication signals from satellites as from 1 January 2000. Digital Terrestrial Television (DTT) will offer yet another channel for the delivery of broadband services when they are introduced. In 2001, third generation mobile services with broadband capability are expected to be operational.

5. Whether Regulation is Necessary for Broadband Interconnection

5.1 With the availability of alternative channels of delivery of broadband services to end users, a relevant question to be asked is whether or not there is a need for regulation on access to and interconnection among broadband networks, be they wired or wireless networks.

5.2 The arguments for regulation are as follows:

(a) In the near future, the most extensive broadband networks would be the fixed wire-based networks of the two operators, CWHKTT and the HKCTV. These two networks have similar origins - they were developed from a network which initially was operated under a monopoly. In the short term, the other modes of delivery, including the wired broadband networks of the other three existing FTNS operators and any wireless networks that might be licensed, are not expected to have coverage anywhere as extensive as these two networks. These two networks also occupy ducts in the public streets (the duplication of which would involve time and environmental disruption), space in in-building cabling facilities (such as cable risers often with limited space) and access facilities into individual users' premises (the duplication of which would at least take time and cause inconvenience to users, even if practicable).

(b) Certain types of in-building wiring systems, such as the communal antenna distribution systems, satellite master antenna television systems and the future developer-provided in-building wiring systems, may constitute "bottleneck" facilities in the provision of access to end users in the buildings. Other forms of

broadband access networks (such as the wireless fixed networks and access through satellites) may well depend on interconnection with these in-building wiring systems for the final parts of the connection to the users' premises. It is not in the public interest for the operators of these in-building wiring systems to act as "gatekeepers" in the communications between the users and the networks and services outside the buildings. General regulatory principles ought to be developed to ensure efficiency of delivery of services over such networks.

(c) As the customers are getting a choice of broadband networks from different operators, there will be a need for the customers in the different networks to be able to communicate with each other, and to access services through appropriate network interconnections. However, there may not be sufficient commercial incentives for operators of the more extensive networks to interconnect with the smaller networks. The value of a network lies in the number of customers connected to it. The operators of the more extensive network could be quite content with its large customer base attracting service providers to be connected to their networks and do not see the need to interconnect with the smaller network operators.

5.3 On the other hand, there are a number of arguments against regulatory intervention:

(a) Alternative forms of access to the broadband infrastructure will emerge in the near future. No form of access may be strictly regarded as "bottleneck". End users would not be denied access to the infrastructure and there would be no need to compel the use of the access network of one operator, which is not a "bottleneck", for the access to the network of another operator.

(b) Unnecessary regulatory intervention would remove, or at least dilute, the commercial incentive in investment in the broadband infrastructure, including the access networks. There would be no incentive to invest in the infrastructure if competitors could gain access to it, without paying adequate compensation to the

investors of the infrastructure who need to bear a substantial part of the risk in the investment.

5.4 The preliminary view of the TA is that interconnection issues cannot be left entirely to commercial negotiations and market forces to resolve. Without the necessary ground rules laid down in a regulatory framework, the commercial negotiations may take an undue length of time, thus delaying the availability of benefits to consumers from competition and choice. Certain issues might never be agreed commercially because of conflicting business interests. Certain outcome may favour operators with stronger market position and may not be entirely in the consumer's interest. Inevitably, certain transmission facilities would constitute bottlenecks in the near term in the delivery of services to end users. For these reasons, there would be a need to formulate the basic ground rules for the regulation of broadband interconnection in order to realize the policy objectives in broadband services. However, the TA continues to prefer a market driven approach in resolving interconnection issues, resorting to the minimum level of regulatory intervention only when commercial process cannot produce the desired result. ***The TA invites comments on the necessity of regulation in broadband interconnection.***

Part II – Proposed Regulatory Framework for Broadband Interconnection

6. Definition of Broadband

6.1 The International Telecommunication Union (ITU) has defined the term "broadband" as "a service or system requiring transmission channel capable of supporting rates greater than the primary rate' , i.e. 1.544 Mbps in the North America hierarchy or 2.048 Mbps in the European hierarchy.

6.2 In its Inquiry concerning the "Deployment of Advanced Telecommunications Capability to All Americans in a Reasonable and Timely

ITU-T Recommendation No. I.113.

Fashion" dated 2 February 1999 , the Federal Communications Commission (FCC) in the USA has defined "broadband" as "having the capability of supporting, in both the provider-to-consumer (downstream) and the consumer-to-provider (upstream) directions, a speed in excess of 200 kbps". The speed of 200 kbps is chosen because "it is enough to provide the most popular forms of broadband – to change web pages as fast as one can flip through the pages of a book and to transmit full-motion video".

6.3. In its consultation paper entitled "Access to Bandwidth: Bringing Higher Bandwidth Services to the Consumer" released in December 1998, the UK Office of Telecommunications (Oftel) focused its attention on services delivering information at a speed between about 384 kbps and 2 Mbps.

6.4 The TA has so far limited the scope of narrowband Type II interconnection to basic ISDN rate i.e. 144 kbps. It therefore seems reasonable to define the broadband interconnection framework as covering services that deliver information above 144 kbps.

6.5 The adoption of a lower limit of 144 kbps would rule out, under the broadband interconnection framework, the consideration of services which will be offered by the public mobile radiotelephone network operators deploying general radio packet services (GRPS) technology later next year, as it only supports transmission rates up to 115 kbps. The interconnection of such services would be considered under the existing narrowband interconnection framework. The proposed boundary between "narrowband" and "broadband" would however include, as "broadband" services, transmission up to 384 kbps over upgraded second generation mobile services.

6.6 ***The TA would welcome views and comments on the definition of "broadband".***

7. Types of Interconnection Configurations to be Available

7.1 The TA considers that the following types of interconnection should exist in the broadband environment and he will be prepared to consider

---

FCC Report adopted 28 January 1999, released 2 February 1999, CC Docket No. 98-146, in paragraph 20.

determining the terms and conditions for these types of interconnection under circumstances described in this section:

(a) Network to Network Interconnection

(i) Type I interconnection
(ii) Type II interconnection

(b) Network to Service Provider Interconnection

However, he would not preclude other types of interconnection in addition to those given above if these additional types are justified on public interest grounds.

NetworktoNetworkInterconnection

7.2 In the context of interconnection between narrowband networks and services, the TA has classified network-to-network interconnections into Type I and Type II interconnections.

7.3 Type I interconnection is the interconnection at the switching level between networks to enable customers of one network to access customers or service providers connected to another network. Type II interconnection is interconnection to the customer access network for the purpose of accessing the end-customers.

7.4 The two types of interconnection are relevant to broadband interconnection and should also be provided for in the broadband environment.

Type I Interconnection

7.5 The purpose of Type I interconnection is to prevent broadband networks being operated as isolated networks. Ideally, a customer directly connected to one network should be able to communicate with any customer or service provider connected to another network. This requirement will still be necessary in the broadband environment. For example, a customer connected to one network may wish to transmit a huge volume of data to another customer connected to another network. A customer connected to one network may

wish to access a video-on-demand server connected to another network. This type of connectivity is often referred to as "any-to-any connectivity".

7.6 While "any-to-any connectivity" has been achieved in the narrowband networks, the achievement of this ideal situation for the broadband environment would be subject to availability of the appropriate technology. Preliminary studies however indicate that the ATM service platform of CWHKTT currently does not support the broadband public inter-carrier interface (B-ICI), which is an interface between two different public ATM network operators. It is also unlikely that such capability would be available commercially in the near future. It appears that while the B-ICI, which is required to support broadband public switched network, is defined in the ATM technical standard, it is currently not commercially available. The Oftel of UK reached a similar conclusion after consultation. Although many consumer groups have indicated their preference for a general-purpose switched ATM network, Oftel concluded that it was not practicable in the short term and it was seen only as a desirable long-term goal. This is however a very important issue to be considered in the interconnection between broadband networks. The TA considers that although the ideal solution of using B-ICI would still require more market developments to support its application, it would be desirable to have some other forms of interconnection between broadband networks in the interim period, although less comprehensive at this stage. ***The TA would like to solicit inputs from the industry on the issue of inter-carrier broadband interface and may issue technical specifications for interface after considering the inputs.***

7.7 One of our policy objectives is to promote inter-operability of services of different service providers. Even with "any-to-any connectivity" achieved by the broadband networks, there is still the question of inter-operability between broadband services. For example, the technical standards at the application level may not be standardized. ***The TA would like to solicit input from the industry on the issue of inter-operability.***

Type II Interconnection

7.8 Type II interconnection is necessary to overcome physical constraints

---

UK Oftel consultation document "Access to Bandwidth: Proposals for Action", July 1999, at paragraph 6.1.

in reaching customers. In some cases, the provision of alternative access networks may be physically impracticable or would take an unduly long time. The lack of competition in the provision of broadband services at present has been attributed mainly to the difficulties in providing customer access of broadband capacity. Type II interconnection enables customers to be reached through customer access networks already in place. The TA therefore considers that Type II interconnection should be available in the broadband environment as for narrowband services.

7.9 In the interconnection to access networks based on the copper-wire local loops, several variants of Type II interconnection are possible:

(a) The operator supplying the interconnection service may be supplying the transmission service over a copper medium, without defining the limits of data speed transmitted over the medium (figure 2). In this case, the operator seeking the interconnection would be providing the modems (e.g. digital subscriber line modems) or other line termination equipment for the transmission and reception of data signals over the medium. This form of interconnection would provide the operator seeking the interconnection the maximum flexibility as it would have access to the full capacity of the transmission medium. However, to the operator providing the interconnection, the form of interconnection would mean that it would lose control of any unused capacity of the medium providing the interconnection service.

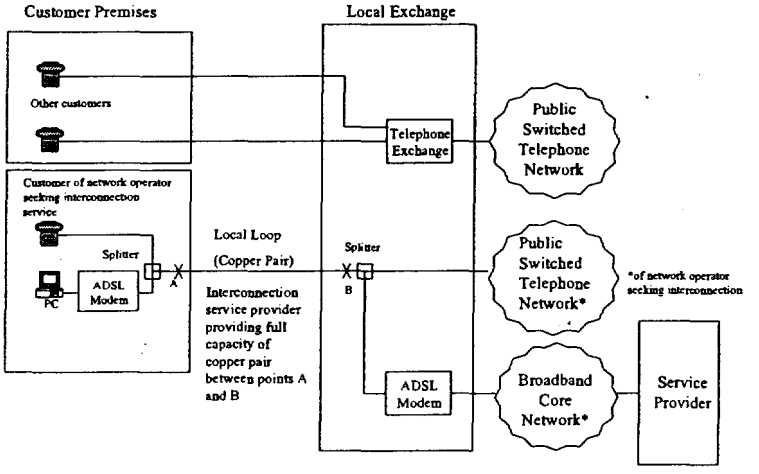

Figure 2

(b) The operator supplying the interconnection service may be supplying the transmission service over the copper medium with defined limits of data speed (figure 3). This is similar to the arrangement given in the TA Statement of 14 April 1999, but the data speed limits would be expanded to cater for the requirements of a broadband transmission. The operator seeking the interconnection would be providing the modems or other line termination equipment. In this form of interconnection, the operator providing the interconnection would retain control of the medium outside the limits occupied by the interconnection service.

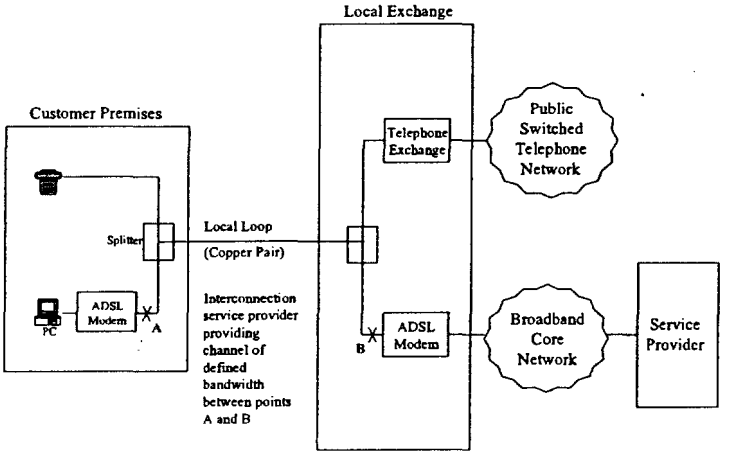

Figure 3

(c) The operator supplying the interconnection service may be supplying a transmission service of a defined data rate (figure 4). In this case, this operator would be providing a data circuit between the customer premises and point of the Type II interconnection, which may be at the local exchange of the operator supplying the transmission service. This operator would be providing the modems or line termination equipment. The operator seeking the interconnection does not need to care about the form of the transmission medium. The transmission medium need not be confined to copper. In fact, for buildings served by the fibre-to-the-building (FTTB) technology, the transmission medium would include the optical fibre section between the building and the local exchange if the point of interconnection is at the local exchange.

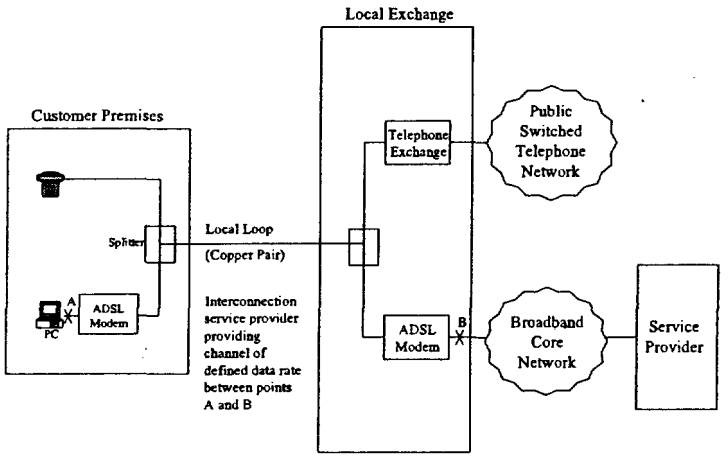

Figure 4

7.10 Interconnection with other forms of access networks is possible. The following is a non-exhaustive list of possible forms of interconnections:

(a) Interconnection to the coaxial cable distribution systems within buildings (which could be the communal antenna distribution system, satellite master antenna television system, or other in-building coaxial cable systems) for the conveyance of broadband signals. The operator providing the interconnection service would provide a defined number and width of channels for the conveyance of broadband services. Such forms of interconnection would possibly be sought by operators of broadband networks based on wireless local loop or satellite transmission.

(b) Interconnection to the cable television network operated by HKCTV to access the customers connected to that network. In this case, the cable television network would simply be used as an access network.

NetworktoServiceProviderInterconnection

7.11 As for narrowband services, service providers are connected to their customers through the switched networks or dedicated circuits provided by network operators. Where connection is through a switched network, interconnection is made at the switches of the networks. The interconnection services offered by the network operators are offered as tariffed services. For example, CWHKTT is offering interconnection services to Public Non-Exclusive Telecommunications Service Licensees as tariffed services. CWHKTT is now offering a tariffed interconnection service to service providers for the use of its broadband network currently being used by Cable & Wireless HKT VOD Limited (CWHKTVOD) for the transmission and delivery of its interactive television services including the Super Netvigator service offered by Cable & Wireless HKT IMS Limited (CWHKTIMS). A schematic diagram illustrating the technical configuration of the CWHKTT broadband network is given at Annex 2.

7.12 Apart from the conventional form of network to service providers interconnection which is now available, the TA envisages that there could be other forms of interconnection. One possible approach is the concept of "line sharing". In this form of interconnection, the service provider seeking interconnection shares the same line used for the customers' existing narrowband telephone services The service provider inter onnects with the access network at the ADSL (Asynchronous Digital Subscriber Line, a form of DSL technologies) modem output at the local exchange. The ADSL modem pair could be provided by the operator of the local loop or the service provider. The service provider then makes its own arrangement for broadband transmission between the point of interconnection and the service provider's facilities (figure 5). It has been argued that the requirement for a service provider to acquire a second connection, and bear the cost for it, for broadband access is a major deterrent to the development of competition. To foster competition, the customer ought to be able to share the same line used for the customer's existing narrowband telephone services. To implement the suggested mode of interconnection, service providers would have to be granted the right to co-locate equipment at the local exchanges of the fixed network operators, a right hitherto granted only to network operators.

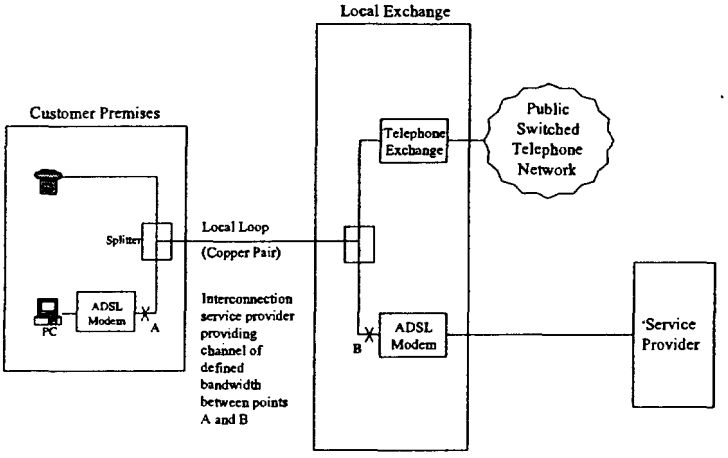

Figure 5

7.13 Similarly, the hybrid fibre coaxial (HFC) cable network of HKCTV could be interconnected to service providers for the provisions of various forms of broadband services to end users. A schematic diagram illustrating the technical configuration of the HKCTV's HFC network is given at Annex 3.

OtherTypesofInterconnection

7.14 The TA has an open mind on the forms of interconnection to be made available. Under the Telecommunication Ordinance, the TA may determine the terms and conditions of interconnection between any telecommunication systems and services. Such terms and conditions include the points of interconnection. This has been clarified in the Telecommunication (Amendment) Bill as interconnection at any technically feasible points. The TA considers that the forms of interconnection should not be restricted to a defined number of types, but he should be prepared to consider new types of interconnections.

7.15 As an example, the TA has identified in Statement No. 8 issued on 10 June 1995 that interconnection to the backbone infrastructure of another

operator's network may be considerec . In the broadband context, such interconnection may be necessary to complete the trunk transmission for certain types of networks. For example, the operators of wireless fixed networks would not be granted the right to lay and operate cables across public streets or unleased land before the end of 2002. Operators of external facilities may need backhaul facilities to connect the external facilities to the gateway facilities located in a more centralised area. Although the TA would encourage commercial agreement on the terms and conditions for such supply of interconnection services on a "carrier-to-carrier" basis, he would not exclude the possibility of a determination under section 36A should public interest so justify.

7.16 ***The TA wishes to seek views and comments on the types of interconnection outlined in the foregoing paragraphs and what other practicalvariationscouldbemadeinrespectofthebroadbandnetworks.***

8. General Principles of Interconnection Determination

8.1 The TA's primary objective regarding broadband interconnection is to promote public access to broadband services at affordable prices, and at the same time, maintain the commercial incentive for further rollout and upgrade of networks, and for continuous investment in related infrastructure. The TA also notes that since investment in broadband network is likely to be substantial and involves high business risk, a reasonable and fair compensation for the network operators in respect of interconnection is necessary to sustain investment incentives.

8.2 The TA is of the view that regulatory intervention should be kept at a minimum, provided that a competitive commercial market environment could give the right signals to investments and stimulate effective demand. The TA thus hopes that network operators and service providers could agree on a commercial basis the relevant charges and conditions for interconnection over the broadband networks. However, in case it is not possible for them to reach commercial agreement, the TA could mediate or make determinations based on some predetermined guidelines. Following these guidelines, the TA wants to

---

Paragraph 8, TA Statement No. 8 on "Point of Interconnection" issued on 10 June 1995.

ensure that all actual and relevant costs incurred by the network operators could be recovered, and a fair return be provided to the infrastructure investments taking into account the level of business risks incurred These procedures should help preserve commercial and investment incentives while widening the access to broadband services.

8.3 The TA is also aware of the need to maintain a fair and competitive market environment in broadband services. The interconnection arrangements, whether achieved under commercial negotiations or by the determination of the TA, should be based on transparent and non-discriminatory principles. This would, on the one hand, reduce inefficient entry and operations, and on the other hand, prevent incumbent network operators imposing vertical squeeze and anti-competitive terms on its competitors in the retail market.

8.4 ***TheTAwelcomesviewsonabovegeneralprinciples.***

9. Charging Principles

9.1 To ensure reasonable access to the broadband networks by service providers and the general public at affordable prices, and to fairly compensate the network operators on their relevant costs and the business risks, the TA has considered several optional charging principles that could form the basis for commercial negotiations on interconnection and possible TA's determination, if necessary.

9.2 When considering the appropriate charging principles on broadband interconnection, the TA has taken into account the nature of the broadband market in Hong Kong, with the following characteristics:

(a) investment in broadband networks, especially in the installation and rollout of optical fibre cables, involves huge sums, high fixed costs and significant business risks;

(b) most of the broadband services and related infrastructure such as the optical fibre networks are newly introduced, and in their early product development stage and payback period;

(c) broadband technologies are at an infant stage and significant

developments and changes could emerge in the short term, thus creating a high risk of early obsolescence to the infrastructure already built; and

(d) HKCTV and CWHKT's interactive TV/video-on-demand services are in the early years of their total investment periods, having made substantial up-front capital investment.

9.3 The TA considers that the financial circumstances facing the existing broadband-related services may be due to a number of reasons, including the macro-economic environment and the fact that broadband services would require a critical mass in the market to support viable operations and justify the economics of investment.

9.4 Similar to the product development path of many durable goods and new technologies, the rate and speed of acceptance of broadband services are likely to take several years to pick up before there is widespread adoption and usage. Before the product and market are mature enough, and the mass market is reached, relatively lower business volume and probably lower returns (or even losses) appear common not only in the telecommunications sector but also in many other economic sectors at a similar stage of development. This may affect the commercial incentive of investors to roll out and upgrade their networks for higher bandwidth services. The TA has considered that this problem may be exacerbated if the investors or network operators feel that the opening up of their networks for interconnection, without a reasonable and fair compensation, would make it more difficult for them to reach the critical mass in the market and would thus reduce the prospects for running a profitable business in the longer term.

9.5 The TA accepts that the broadband interconnection charges would provide the signals for long term investment decisions in the related segments and wrong signals could distort the investment and development decisions. Such disincentives could slow down the related infrastructure investment and the development of wholesale broadband services. End customers would then have to pay a higher retail tariff simply because of the supply side bottlenecks in the basic infrastructures. The resultant adverse impact on the supply side could undermine the development of effective demand and usage of broadband services in Hong Kong.

9.6 On the other hand, it could also be argued that if there is ready and efficient interconnection for service providers to offer a wide variety of content to end users, this by itself would stimulate demand for broadband services, thereby resulting in significant cost advantages in the infrastructure due to the economies of scale and rapid turnover.

ApproachestoPricingtheBroadbandInterconnectionCharges

9.7 Bearing in mind the stated general and charging principles, the TA would like to put forward the following options as the possible underlying principles for determining interconnection charges for broadband networks:-

(a) Long Run Average Incremental Cost (LRAIC), which will take into account the unique business risk and rate of return involved in network investment. The cost elements could incorporate an adjusted cost of capital to reflect the market risk that is fair and compensatory. Under specific circumstances, some of the relevant common and/or joint costs could also be included;

(b) Fully Distributed Cost (FDC), which will include the long-run incremental cost plus the fully allocated common and/or joint fixed costs that are incurred at the entity level. This approach usually involves costs in the production of multiple products or services that cannot be separately attributed to individual product/service segments;

(c) Retail minus approach, which sets the price cap for interconnection at retail price minus costs incurred by the retail activities of the network operator's in-house/affiliated service providers; and

(d) LRAIC plus lost profit incurred by the lost opportunity to provide the broadband services by the network operator itself. This forms the basis of opportunity cost and also represents the principle of efficient component pricing rule, or ECPR.

9.8 The options could also be applied in combination to take account of market realities, industry practices and development trends. In some cases, the FDC option (option (b)) could be adopted in newly installed or upgraded broadband networks and facilities so as to maintain the investment and operational incentives for these "young products". On the other hand, pricing arrangements for existing copper loop carrying narrowband services, with no new or additional equipment being established to facilitate broadband transmission, could follow the forward looking LRAIC option (option (a)).

9.9 The TA believes that the adoption of a set of sound economic principles should reduce distortions in investment directions and incentives, and community resources would be more efficiently allocated.

AdvantagesandDisadvantagesoftheChargingOptions

9.10 The TA has considered the pros and cons for each of the options listed in paragraph 9.7. Some are simple in implementation but less appropriate due to the unique technical characteristics of broadband services. Others may be advocated by some sectors of the industry but could lead to over- or under-compensation of the network operators, and allow for inefficient entry/operations, which would result in distortions of investment and development in the broadband market in the longer term. Some options may be strong on theoretical basis but would have difficulties in application due to problems in establishing appropriate financial indicators to closely reflect the relevant costs and reasonable rate of return. The TA is also aware of the implications of each option on the interests of different stakeholders, including the network operators investing in the broadband infrastructure, the interconnecting network operators and service providers, and the end customers. In addition, the TA would like to compare how the various options could enhance the efficiency of entry/operation as well as resource allocation. ***The TAwouldwelcomecommentsandsuggestionsonthecostingapproaches.***

Option (a) - LRAIC

9.10.1 The LRAIC based approach (option (a)) is commonly

adopted in many jurisdictions and in line with the existing interconnection rules. It is quite usual that the incumbent network operators would argue that an incremental cost-based charging option ignores their huge investment risk and business potential and would therefore undermine their investment incentives. Nonetheless, the TA believes that if the incremental cost contains all the relevant common and/or joint costs to the broadband and other services, and the adjusted cost of capital includes a market cost of capital, an appropriate rate of return and the incorporation of a legitimate risk premium, then the relevant cost of the network operators should be recovered in full, thereby removing the disincentive for investment due to the opening up of the broadband market.

9.10.2 Under such arrangements, both the network operators and the interconnecting parties (either the other network operators or service providers), will benefit from a fair and justifiable cost. Ultimately, cost-based interconnection charges could filter through to lower retail costs and tariffs, which will encourage wider access and faster adoption of broadband services among the end customers.

9.10.3 The charging option based on LRAIC of the networks has the advantage of preventing inefficient entry/operation. The fair and compensatory approach ensures that service providers which interconnect with the networks could not profit from the "below cost" wholesale offer. It will encourage entry and long-term viability of the most cost-efficient firms in the markets. As a result, consumers would enjoy lower prices and higher quality of services.

9.10.4 Since option (a) allows efficient network operators to fully recover the relevant costs, it could provide the correct signals for long-term project valuation and efficient allocation of resources, and reduce distortions on long term investment and advancement in the telecommunications industry in Hong Kong. Yet, the TA is also concerned that the relatively lower interconnection charges (compared with FDC) derived from the LRAIC model may lead to deferral of plans of participants' (especially new ones) in building their own networks and infrastructure, leading to over-reliance on the incumbent networks. However, this effect could be moderated if the adjusted cost of capital truly reflects the efficient costs of the relevant infrastructure investment.

9.10.5 Another key consideration of this approach is the need to determine the cost of capital, rate of return and risk premium that would fairly, but not over, compensate the network operators.

9.10.6 The TA considers that he can refer to benchmarks provided by market intelligence, as well as by the network operators from their original business plans at the investment stage, when considering the expected cost of capital and rate of return. Both the established (historic) investment plans and new projects (current or forward looking) to further roll out or upgrade the existing networks for broadband services provision could be taken into account. The TA has already engaged a consulting firm to assess the cost structure regarding the interconnection among TV network operators and FTNS operators and he is prepared to take advice from other external consultants again to evaluate the appropriate adjusted cost of capital for the broadband networks. This exercise may include a survey from the investment banks and estimation of the *beta* factor (a risk indicator) of similar telecommunications or technology-related companies listed in overseas stock markets. The TA is aware that Hong Kong is one of the pioneers in the opening up of the broadband networks and there are few, if any, solid precedents or benchmark cases to follow.

Option (b) - FDC

9.10.7 The TA notes that the existing Type I and Type II interconnection principles, which are basically LRAIC-based, may not be fully adaptable to the broadband networks. In broadband interconnections, there are many situations for which significant shared costs exist. For example, the interconnected network elements can be either dedicated, i.e. 100% of the available capacity is offered by the network operator to another operator, or shared, i.e. the interconnected operator would require a lesser proportion of available capacity at a certain point of time. Moreover, both narrowband services and broadband services can also share the same network. A LRAIC-based approach may not satisfactorily deal with such shared costs.

9.10.8 In addition, the principles applicable to the existing narrowband networks which have been established for a long time and at

their mature product stage and payback period may not be appropriate for all the newly installed networks and facilities. The implementation of the existing incremental cost-based interconnection rules to all new networks may in some cases lead to disincentives for further investment, distorting the development of broadband services over the longer term. The FDC principle (option (b)) would benefit the network operators since it allows full recovery of all costs in the infrastructure investment (including the shared elements). Under such rules, network rollout is encouraged (by both the existing network operators and new participants) and that would help prevent the new entrants from over-reliance on the incumbent's networks. Against such a background, the TA would also consider that the FDC principle might be applicable under some special circumstances (e.g. where interconnection service is provided to established competitors, or where the interconnection service constitutes a substantial proportion of the business of the supplier of that service, in which case a LRAIC based interconnection charge would not be fully compensatory to cover the cost of the service supplier).

9.10.9 However, the TA is also aware that an FDC model would result in relatively higher interconnection charges that might discourage the service providers and end customers and thus could hamper the wider access and rate of adoption of broadband services in Hong Kong. The higher access costs might also be manipulated by the incumbents as a barrier to entry, reducing the effectiveness of a competitive market and thus the drive for efficiency in operation and resource allocation. Compensation in excess of the LRAIC may also create distorted investment signals that induce the new entrants to over-invest in their own facilities, leading to unproductive duplication and wastage of resources.

Option (c) - Retail minus approach

9.10.10 The retail minus approach (option (c)) is appropriate for a fast growing and competitive market, in which competitive market forces and/or rapid adoption of new technologies put constant pressure on the retail prices. Retail minus pricing would reflect the most up-to-date market rate of return, cost structure, business risks, etc. Under such arrangements, the network operators will be indifferent in providing its access and conveyance services to its own/affiliated retail operations in

service provision or the other service providers, and thus the disincentives of investment would be minimal.

9.10.11 The resultant interconnection charges could be higher, lower, or similar to those derived from option (a) and (b). If the market is mature and competitive, and the incumbent providers are operating efficiently, retail minus pricing should reflect a "normal profit" and approaches the level derived from option (a). On the contrary, if the retail market is dominated by a few operators, who possess significant market power and thus huge "excess profit", the interconnection charges derived from option (c) could easily exceed the fully distributed cost. If the retail market is priced below cost to stimulate demand, the interconnection charge derived from option (c) could also be below the network costs. As such, the implications of this model to connecting carriers or service providers would hinge on the state of market development. Impact on end customers is also mixed. On the one hand, before a competitive retail market is established, end users might be faced with higher retail tariffs that reflect the higher interconnection charges. On the other hand, since the option helps sustain the incentives in infrastructure investment, the end customers might enjoy larger capacity at lower prices, driven by faster growing supply of capacity.

9.10.12 Since the network operators are obliged to offer the same terms to the service providers as to their in-house retail units, vertical squeeze and cross-subsidization could be avoided, thereby upholding fair competition in the market. New entrants should be at least as efficient as the incumbent network operators to sustain their market positions and thus inefficient entry could be avoided.

9.10.13 However, option (c) reflects the current market conditions and does not necessarily represent the right signals for long-term investment, at least before a competitive retail market is established. At one end of the scale, it is likely to over-compensate the network operators who have enjoyed the privileges to roll out an extensive network in the territory, and the related monopoly profits on the narrowband or other services that they have been providing. At the other end of the scale, since business volume and thus profitability of the new broadband services could be relatively low before the critical mass is reached, the

retail profit of the network operators could also skew towards the lower end (or even loss-making), leading to under-compensation and disincentives to continuous and new investments.

Option (d) - Efficient component pricing rule

9.10.14 Although the network operators could argue that the efficient component pricing rule (ECPR) approach will prevent "below cost" pricing and thus unfair subsidization of their competitors, thereby sustaining the investment incentives, the TA is aware that the interconnection charges estimated under this rule will be equated to the justifiable "opportunity cost" only if the initial price is already optimal (i.e. it includes no excess profit, monopoly rent or costs of inefficiencies). This might be a less than realistic assumption given the well established physical infrastructure and business position of the network operators, who would benefit from this option.

9.10.15 Moreover, the estimation of "opportunity cost" and "potential profits" could be arbitrary and vary with the tariffs of the retail services offered by different service providers, under which discriminatory actions might easily occur and thus less favourable to the connecting parties. An "opportunity cost" based on their own retail profits will also undermine the incentives of the network operators to improve efficiency and reduce costs and prices. To this end, the end users would be disadvantaged. From a competition point of view, ECPR-based prices, which usually approach retail tariffs or profit, might squeeze the profit margin of the requesting service providers and become a barrier to entry, just like in option (c). Last but not the least, the ECPR pricing would reflect the true investment signals only if the "opportunity cost" could be proxy to the actual efficient costs and market returns. Otherwise, relatively high ECPR-based interconnection charges would prompt new entrants to over-invest, leading again to unproductive duplication and distortions of the long-term development path of the broadband market in Hong Kong.

CostingStandards

9.11 Given that the various charging options proposed in paragraph 9.7 are

cost-based, the TA would also seek comments on the cost standards to be adopted, particularly whether the relevant costs should be determined with reference to the historic (or book), current (or replacement), or forward-looking costs. The TA believes that the adoption of current or forward-looking costs could encourage efficiency and technological innovation. However, an approach based strictly on the forward-looking principle could be difficult to implement in a fast growing industry with rapid technological advancement. This is because costs may change rapidly as a result and the operators and the regulator would have to constantly update and interpret the forward-looking costs. The administrative burden thus created could easily outweigh the benefits.

CostofCapital

9.12 Charging option (a) in paragraph 9.7 is LRAIC based. The main focus lies in the determination of an appropriate cost of capital, which would fully compensate the network operators with a reasonable rate of return after taking into account the risk undertaken. Since the retail market of broadband services is expected to move towards a competitive status following the opening of the access networks, market pressure would gradually drive retail tariff down to a competitive level. In such a mature market, the retail profit attained by the service providers, including the in-house unit of the network operators, would reflect the "normal profit" at the most efficient level. Only under such circumstances would the profit reflect the reasonable rate of return and the most current market risk, or in other words, converge with the adjusted cost of capital in option (a).

9.13 Nonetheless, before a competitive retail market for broadband services is established and thus before appropriate benchmarks or market information are available to form the basis of reference, the determination of an appropriate cost of capital, which include a reasonable rate of return and fully compensatory risk premium would be difficult. As mentioned in paragraph 9.10.6, the TA could refer to market intelligence and business plans provided by the network operators.

ResponsibilityforBearingCosts

9.14 The TA is mindful that under an efficient and fair business

environment, operators must pay for the relevant costs that they cause other operators to incur as a result of interconnection, i.e. the avoidable costs. For example, the operator requesting interconnection should pay for all the cost incurred by the network operator on the broadband access if such establishment would support only one service provider, i.e. a dedicated element. In the case of shared capacity, all operators interconnected to the same network would share the cost incurred in proportion to some relevant unit (capacity, per minute of traffic, etc.)

9.15 Nonetheless, the principle may encounter various difficulties in implementation. In the case of two-way traffic, it may be debatable whether the interconnection costs should be all borne by the originating/terminating party of the service, or to be shared by both sides. The problem could be complicated when traffic volumes are consistently asymmetric. Special considerations should also be taken regarding the charging system of the retail market, especially if only the originating or the terminating party receives retail tariff from the customers, or if a flat rate system or free access is widely adopted.

StructureofCharges

9.16 The TA is aware that the existing broadband networks include different technological platforms, such as the hybrid fibre-coaxial cable network and the traditional PSTN network. In addition, other platforms based on wireless technologies are likely to be introduced in response to the Government's liberalisation measures in the telecommunications market. All these networks may be different in terms of product profiles, product development and investment stages, as well as their payback period. For example, interconnection between a narrowband network and a broadband network would involve the problem concerning whether the narrowband or the broadband pricing principles should be applicable. Taking into account such considerations, although the TA believes that, under an efficient operational environment, symmetry of charges is preferred between networks of a similar design, he acknowledges that different charges may be necessary when the technological differences account for actual underlying cost differences. The TA would welcome the industry's comments on or provision of actual costing and market information that could help verify such cost differences. The TA would use such information with due regard to commercial confidentiality.

EssentialSupportElements

9.17 The TA defines "Essential Support Elements" as passive, fundamental network elements that are made available by the network operators to the operators requesting interconnection, and for which no cost-effective, viable alternative exists. These elements are analogous to bottleneck facilities for interconnection of the existing narrowband networks and should be treated in a similar way. The costs of establishing and maintaining such elements should be shared among the interconnecting operators on the basis of the relative proportion of the capacity being requested. Cost of modification to the "Essential Support Elements", if necessary, should be entirely borne by the operators seeking the interconnection.

Part III - Invitation of Comments

10.1 The TA invites views and comments on the issues raised in this consultation paper and any other issues considered to be relevant to the subject of interconnection of broadband networks and services. All views and comments should be made in writing and should reach the Office of the Telecommunications Authority **on or before 31 January 2000** The TA reserves the right to publish all views and comments received and to disclose the identity of the source. Any part of the submission, which is considered commercially confidential, should be clearly marked. The TA would take such markings into account in making his decision as to whether to disclose such information or not. Submissions should be addressed to:

Office of the Telecommunications Authority
29/F Wu Chung House
213 Queen's Road East
Wanchai
Hong Kong
[Attn.: Economic Advisor (1)]

Please fax your comments to: (852) 2803 5112 or e-mail to vlsyeung@ofta.gov.hk.

10.2 After considering all the views and comments received, the TA intends to issue a second consultation document incorporating the views and comments received and the preliminary basis upon which the TA intends to draw up guidelines for broadband interconnection.

Office of the Telecommunications Authority
3 November 1999

c:\ofta\broadint.doc

Annex 1

Recent Developments of Broadband Infrastructure

Broadband Network of Cable & Wireless HKT Telephone Limited (CWHKTT)

There were about 100,000 customers as of end September 1999 subscribing to the interactive television (video-on-demand) service of Cable & Wireless HKT VOD Limited (CWHKTVOD), an affiliated company of CWHKTT operating the underlying broadband conveyance service called Residential Cell Relay Service (CRS). This was also the size of CWHKTT's CRS customer base.

2. The broadband network of CWHKTT has passed 1.5 million homes. This represents about 75% of Hong Hong's households and some four to five thousand buildings. Furthermore, CWHKTT has declared its intention to extend its broadband network to at least 80% of Hong Hong's households by year 2000. According to CWHKTT, 75% of the 1.5 million households which are passed by its broadband network are served by optical fibre cables. The remainders of the households passed, which are those located on the lower floors of the multi-storey buildings, are served by copper local loops augmented with Asymmetric Digital Subscriber Line (ADSL) modems.

Broadband Services Offered by CWHKTT

3. As of end June 1999, Cable & Wireless HKT IMS Limited (CWHKTIMS) was the only customer of the CRS. CWHKTIMS is currently the only Internet Service Provider (ISP) in Hong Kong offering a broadband access Internet service at the speed of 1.5 Mbps to some 11,000 customers. However, CWHKTT has in June 1999 launched two new CRS services, the so-called CRS SP and CRS C services. These two new services are meant to enable ISPs to offer standalone broadband access Internet service without having to host the more expensive VOD service at the same time. Similar to the other CRS, the CRS SP and CRS C services must be subscribed to together as a complete end-to-end communication path. The services are for transmission between home users and the ISP subscribing to the services only;

it does not permit connection between home users and home users, nor between one ISP and another ISP.

Hong Kong Cable Television Limited (HKCTV)

4. HKCTV has advised that its optical fibre network had passed some 820,000 households as of October 1999, 50% of all households passed by HKCTV's subscription television network. By the end of 1999, the optical fibre network of HKCTV should have passed 950,000 households, representing more than half of the total households in the territory.

5. On completion of the 1998 Review of Television Policy, the Government announced on 10 December 1998 the policy decisions[5], among other things, that:

(a) cable television networks would be allowed to deliver telecommunication services, and

(b) the broadband network of HKCTV is to be opened up for interconnection with other telecommunication and television networks. The preference of the TA is for the interconnection charges to be negotiated and agreed commercially between HKCTV and the operators requesting interconnection. In the event that a commercial agreement cannot be reached, the TA may determine a fair interconnection charge.

6. The TA has subsequently commissioned a consultant to develop, in consultation with the industry, a set of principles and technical arrangements on the interconnection among television network operators and FTNS operators. The objective is to publish guidelines on the arrangements for reference by the industry. The consultant has just presented its report to the TA.

7. In addition, as a result of its review of the telecommunications policy in 1998, the Government has announced on 5 May 1999 that, among other things, HKCTV will be permitted to offer telecommunications services using cable modem technology over its hybrid fibre coaxial network. HKCTV has

---

[5] Legislative Council Brief on 1998 Review of Television Policy, 10 December 1998

subsequently been reported in the press as being confident of capturing 40% of the broadband market using cable modem technology in four years' time.

Future Developments

8. Other than the networks established by CWHKTT and HKCTV, optical fibre networks have also been established by the other three new FTNS operators namely New World Telephone Limited, Hutchison Communications Limited and New T & T Hong Kong Limited. Each of these three operators are required by the terms and conditions of their licences to pass a minimum number of buildings, and the requirements are published by the TA in the homepage of the Office of Telecommunications Authority. These networks mainly serve the central commercial districts and the airport. In return for the agreement of the Government to extend the moratorium of issuing additional wireline-based local FTNS licences till the end of 2002, these three operators have made further commitments on their network rollouts. These additional commitments were announced by the Government on 10 September 1999[6].

9. The Government has already announced its policy decision that new FTNS licences will be issued for the provision of fixed telecommunications services using non-wireline-based networks, including the use of broadband local multipoint distribution system (LMDS) technologies.

10. With the commencement of competition in the provision of external facilities from 1 January 2000, direct reception from satellites of telecommunications signals by Satellite Master Antenna Television systems will be permitted. This will provide an additional form of broadband access to households. Initially, such access will be used for one-way downloading of broadband signals from the satellites to the users, with the messages in the reverse direction conveyed over terrestrial telecommunications networks.

Technologies

BackboneTransmissionNetworks

---

[6] Legislative Council Brief on 1998 Review of Fixed Telecommunications - Progress Report on the moratorium on the issue of further local fixed telecommunication network services licences, 10 September 1999.

Asynchronous Transfer Mode (ATM) Service

11. CWHKTT launched its first ATM service in September 1996 with the aim of providing a cost-efficient environment for broadband multimedia applications. Currently, the ATM service platform of CWHKTT is capable of supporting both ITU-T I.432 (155 Mbps STM-1) and ATM Forum UNI 3.0/3.1 (155 Mbps OC3c) interfaces.

AccessNetworks

Fibre to the Building (FTTB)

12. The optical fibre network of CWHKTT has already passed four to five thousand buildings. With the FTTB, CWHKTT is able to deliver high bandwidth services of up to 622 Mbps to user buildings. The optical signals are then converted at the basement of the user buildings and delivered for the remaining hundred or so metres over in-building twisted copper pairs to end users. In this way, dedicated 25 Mbps bandwidth can be provided to individual end users in both the upstream and downstream directions.

Cable Modems

13. HKCTV will be permitted to offer telecommunications services using cable modem technology over its hybrid fibre coaxial network around the end of this year, subject to submission of an acceptable application by HKCTV. The cable modem technology should be able to support a data rate of 27 to 36 Mbps. The downstream data traffic is sent continuously to all cable modems located on the same cable segment and each modem extracts the data addressed to it from the data stream. All active cable modem customers located on the same cable segment therefore share the bandwidth. Typically, some 500 to 2,000 homes are served on a modern hybrid fibre-coaxial (HFC) network. An individual cable modem customer should therefore expect to enjoy access speed from 0.5 to 1 Mbps depending on the network architecture and the traffic loading.

14. In the upstream direction, a data rate of 320 kbps to 10 Mbps can be achieved and all the active cable modem customers on the same cable segment again share this. For a detailed discussion of the cable modem technologies,

readers may wish to refer to the TSAC New Standards & Policy Working Group Paper No. 5/99, which may be retrieved from the homepage of OFTA.

xDSL Technologies

15. Digital subscriber line (DSL) technologies, collectively referred to as xDSL, is capable of delivering up to tens of megabits per second over the existing access copper access network of CWHKTT. For a detailed discussion of the xDSL technologies, readers may wish to refer to the TSAC (Telecommunications Standards Advisory Committee) New Standards & Policy Working Group Paper No. 30/98, which may be retrieved from the homepage of OFTA.

xDSL Access Architecture

16. xDSL is predominately used as an overlay technology operating on the same copper pair which delivers existing narrowband plain old telephone service (POTS). This is achieved by utilizing frequency spectrum above that used for POTS. At the local exchange, the narrowband POTS signal is combined with the broadband signal using a splitter and the combined signal is then sent down the copper pair. The narrowband signal uses the lower part of the spectrum and the broadband signal uses the higher frequencies. At the customer premises, a splitter will then separate the combined signals. The narrowband signal will be passed to the telephone while the broadband signal will be passed to the xDSL modem.

17. Where spare copper pairs exist, there is also a market for xDSL on additional pairs. This would remove the need to carry both the narrowband signal and broadband signal on the same copper pairs and obviate the need for splitters. It is understood that CWHKTT has made use of both set-ups for the delivery of its CRS.

18. For the case where both the narrowband and broadband signals have to be combined onto a single copper pair, a splitter-less configuration is also technically feasible if ADSL-Lite technology is used. Such a technology is to target the possibility of a customer buying his own ADSL-Lite modem from a store, plugging it into the telephone wall socket and informing his FTNS operator to activate the service. The main attraction of this arrangement is that

it obviates the need for the FTNS operator to send a technician on site to install the splitter and to re-arrange the customer premises wiring.

Line Sharing

19. The feasibility of combining both the narrowband POTS signal and the broadband signal, which delivers innovative new services, onto a single copper pair has opened up new business opportunities for newcomers. It is now technically possible that while the incumbent FTNS operator may continue to provide the narrowband POTS using the lower portion of the frequency spectrum of the copper pair, another FTNS operator may "share the line" and make use of the higher frequency for delivery of broadband services. Both the FCC and the Oftel have come to the tentative conclusion that such an arrangement, called "line sharing", are technically feasible and should be permitted.

Annex 2

Cable & Wireless HKT Telephone Broadband Network

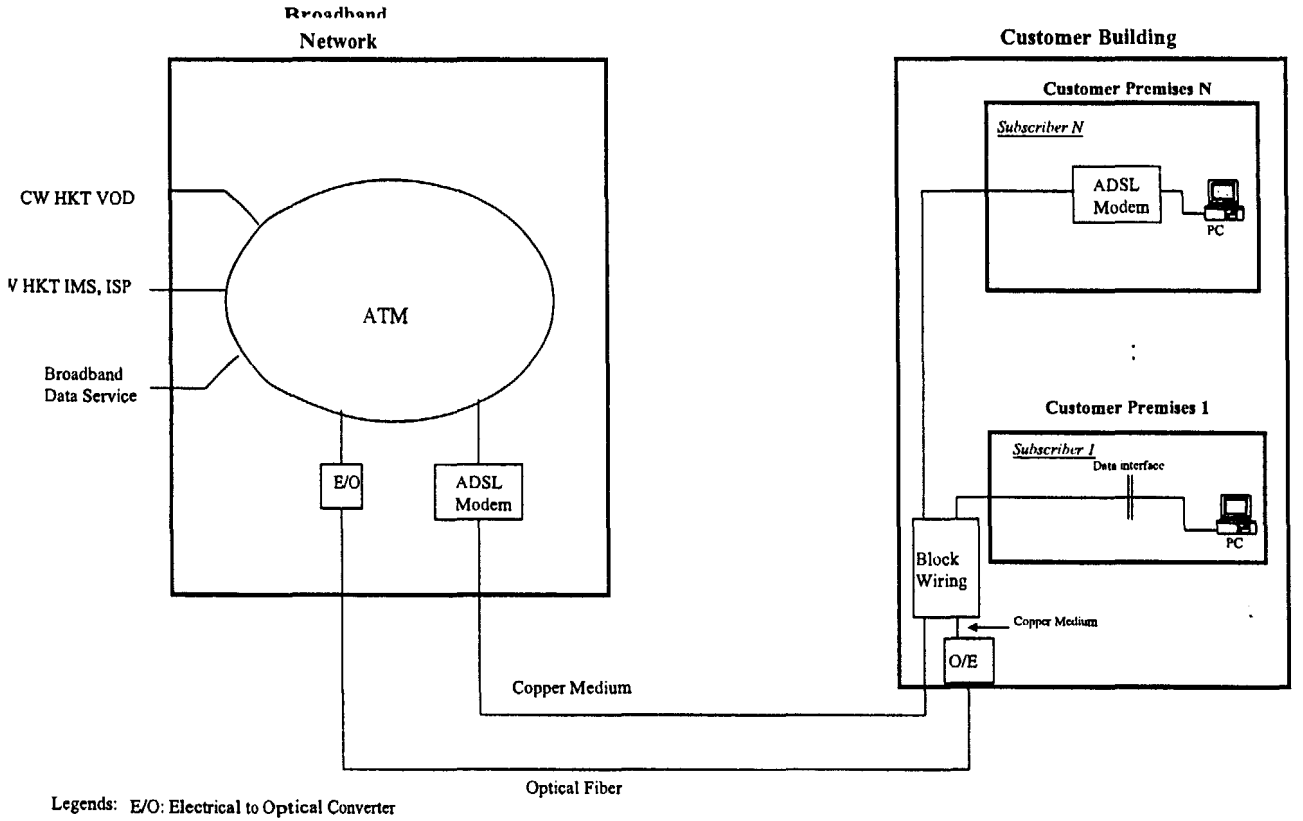

Legends: E/O: Electrical to Optical Converter
O/E: Optical to Electrical Converter

Annex 3
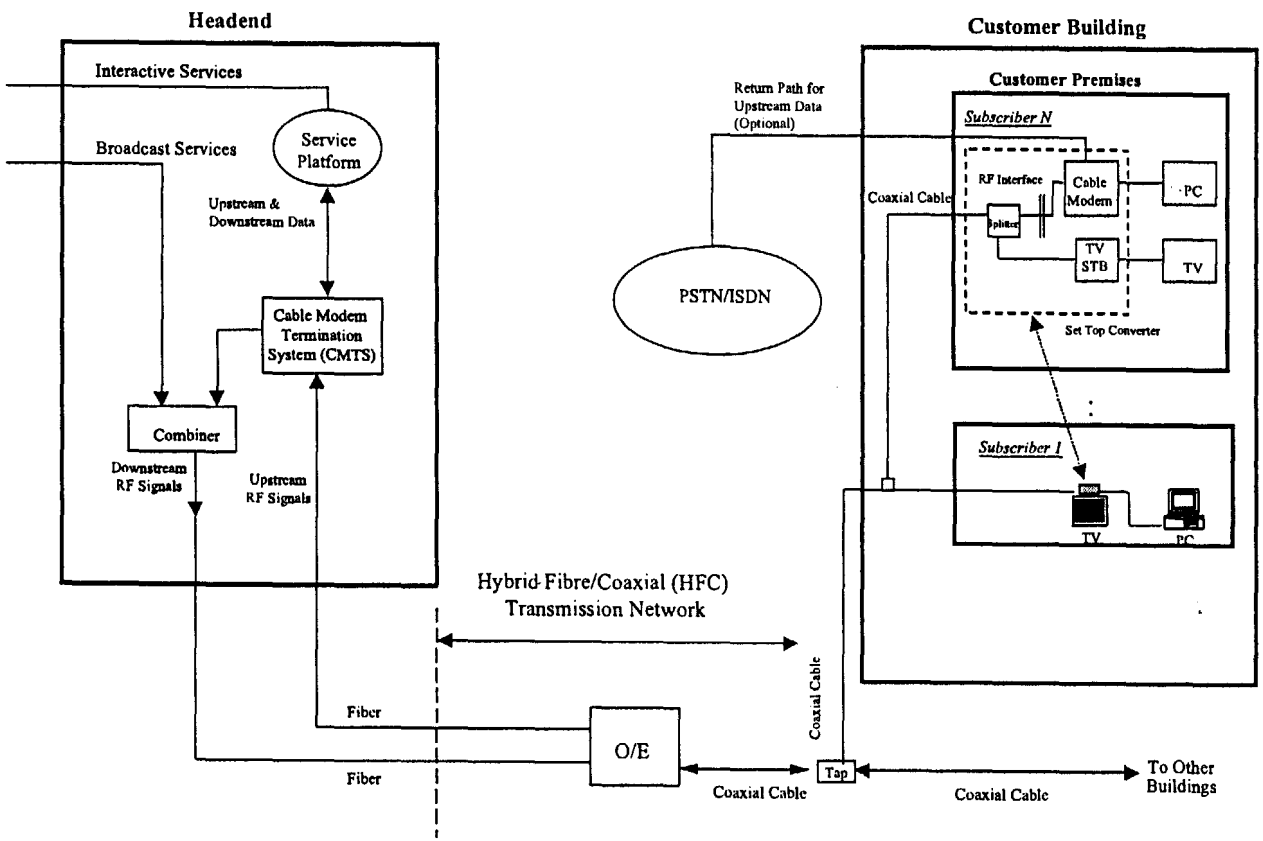
Hong Kong Cable Television HFC Network