Revised: June 23, 1999

A REPORT OF THE NETWORK INTERCONNECTION INTEROPERABILITY FORUM (NIIF)

AIN/IN TRIGGER USAGE IN A MULTI-PROVIDER ENVIRONMENT

Copyright © 1999 by the Alliance for Telecommunications Industry Solutions Inc.
All rights reserved.

The Network Interconnection Interoperability Forum Issue #0006 AIN/IN Trigger Usage in a Multi-Provider Environment document, dated XX/XX/XX, is copyrighted, printed and distributed by the Alliance for Telecommunications Industry Solutions (ATIS) on behalf of the ATIS-sponsored Network Interconnection Interoperability Forum (NIIF).

Except as expressly permitted, no part of this publication may be reproduced or distributed in any form, in an electronic retrieval system or otherwise, without the prior express written permission of ATIS. All requests to reproduce this document shall be in writing and sent to: NIIF Administrator c/o ATIS, 1200 G Street, NW, Suite 500, Washington, DC 20005. NIIF Participating Companies (as that term is defined in the NIIF Principles and Procedures Document) should refer to the NIIF Principles and Procedures, as respects their rights to reproduce this publication.

For ordering information, please contact:

NIIF Administrator
ATIS
1200 G Street N.W., Suite 500
Washington, DC 20005

(202) 434-8851
abaumann@atis.org

An Ordering Form is available on the NIIF Web Site at the following address:
http://www.atis.org/atis/clc/niif/niifdocs.htm

Notice

This document was developed by the Alliance for Telecommunications Industry Solutions' (ATIS) sponsored Network Interconnection Interoperability Forum (NIIF). The NIIF provides an open forum to encourage the discussion and resolution, on a voluntary basis, of industry-wide issues associated with telecommunications network interconnection and interoperability which involve network architecture, management, testing and operations and facilitates the exchange of information concerning these topics. The NIIF is responsible for identifying and incorporating the necessary changes into this document. All changes to this document shall be made through the NIIF issue resolution process as set forth in the NIIF Principles and Procedures.

This document is maintained and exclusively distributed by ATIS on behalf of the NIIF.

Note Regarding Previous Versions

NOTE: ANY IILC REFERENCES??

Disclaimer and Limitation of Liability

The information provided in this document is directed solely to professionals who have the appropriate degree of experience to understand and interpret its contents in accordance with generally accepted engineering or other professional standards and applicable regulations. No recommendation as to products or vendors is made or should be implied.

NO REPRESENTATION OR WARRANTY IS MADE THAT THE INFORMATION IS TECHNICALLY ACCURATE OR SUFFICIENT OR CONFORMS TO ANY STATUTE, GOVERNMENTAL RULE OR REGULATION, AND FURTHER NO REPRESENTATION OR WARRANTY IS MADE OF MERCHANTABILITY OR FITNESS FOR ANY PARTICULAR PURPOSE OR AGAINST INFRINGEMENT OF INTELLECTUAL PROPERTY RIGHTS. ATIS SHALL NOT BE LIABLE, BEYOND THE AMOUNT OF ANY SUM RECEIVED IN PAYMENT BY ATIS FOR THIS DOCUMENT, WITH RESPECT TO ANY CLAIM, AND IN NO EVENT SHALL ATIS BE LIABLE FOR LOST PROFITS OR OTHER INCIDENTAL OR CONSEQUENTIAL DAMAGES. ATIS EXPRESSLY ADVISES THAT ANY AND ALL USE OF OR RELIANCE UPON THE INFORMATION PROVIDED IN THIS DOCUMENT IS AT THE RISK OF THE USER.

1. OVERVIEW 1

2. INTRODUCTION 1

3. PURPOSE AND SCOPE 1

4. ISSUE STATEMENT 2

5. SURVEYS - IN SWITCH VENDOR, IN SERVICE PROVIDER, AND LOCAL EXCHANGE CARRIER 2

6. ROUTING ALTERNATIVES 3

7. EVALUATION CRITERIA 19

8. POSITION PAPERS 24

9. OPERATIONAL AND TECHNICAL ISSUES 56

10. LIAISONS 60

11. CAVEATS 60

12. FINDINGS 61

13. RECOMMENDED NEXT STEPS 62

14. REFERENCES 62

15. GLOSSARY 63

Appendices

1. Letter to potential IN Switch Vendors, dated August 31, 1995
2. Letter to potential IN Service Providers, dated August 31, 1995
3. Reminder memo to potential IN Service Providers, dated January 23, 1996
4. Letters to Local Exchange Carriers, dated June 21 1996

1. OVERVIEW

In December 1988, in its Memorandum Opinion and Order 88-2, the Federal Communications Commission (FCC) directed the Information Industry Liaison Committee (IILC) to "...examine the technical and operational problems of unbundling and assess their scope and possible solutions." In July 1991 and in response to that directive, the Regional Bell Operating Companies introduced to the IILC Issue 026 (Long Term Unbundling and Network Evolution). On April 19, 1995 the full IILC meeting reached final closure on Issue 026. This issue identified several architectural, technical, and operational issues that needed to be investigated by the IILC, including IILC Issue 049 (AIN/IN Trigger Usage in a Multi-Provider Environment).

Issue 049 was opened in June 1995 and was worked by the IILC Task Group. On August 31, 1995, the IILC solicited the Non-Local Exchange Carriers (Non-LECs) and Enhanced Service Providers (ESPs) to present their needs for specific AIN/IN Triggers and to identify the timeframe when such triggers needed to be deployed in the network. As a result, a list of industry needs for triggers was compiled as shown in Appendix IV??. In addition, industry participants were surveyed regarding AIN/IN triggers... Several industry participants responded to this request and the results of these surveys are included in documentation for IILC Issue 026.

On January 1, 1997, the Network Interconnection/Interoperability Forum (NIIF) assumed responsibility for IILC Issue 049 and designated it NIIF Issue 0006. The NIIF assigned the issue to the Network Interconnection/Architecture Committee (NIAC). The Committee considered four SS7 routing alternatives. The routing alternatives were in the form of technical contributions from BellSouth (September 4, 1996), MCI (March 6, 1997), AGCS (March 6, 1997), and GTE (March 6, 1997). These four routing alternatives are included in Section 6. The opportunity to contribute to the resolution of this issue was afforded to all industry participants. The NIAC also agreed on a list of 27 criteria (Section 7) to be used in evaluating the viability of the four routing alternatives for implementation in the U.S. telecommunications network. The NIAC participants provided company position papers on the resultant Straw Evaluation/Screening Matrix (Section 8). The NIIF decided not to recommend adoption of any one of the routing alternatives. In addition, the NIIF identified technical and operational issues (Section 9). The NIIF believes that active interest and effort must be made by the industry to pursue the resolution of these issues.

2. INTRODUCTION

This document presents the results of the work undertaken by both the IILC and the NIIF in the resolution of NIIF Issue 0006 (IILC Issue 049) titled AIN/IN Trigger Usage in a Multi-Provider Environment. This issue was opened in June 1995 as an IILC issue, because there was a desire by the ESPs and Non-LECs to control aspects of switch functionality in order to provide end user services using Intelligent Networks trigger capabilities.

3. PURPOSE AND SCOPE

The purpose and scope of this report are to:

- Document the accepted definitions of available AIN/IN triggers defined in recognized industry documentation.
- Document the results of industry surveys of LECs, potential IN vendors and ESPs.
- Document the four routing alternatives that were submitted for trigger usage in a multi-provider environment.
- Identify technical and operational issues.

4. ISSUE STATEMENT

The following is the text of the NIIF Issue #0006 Issue Statement as recorded on the Issue Identification Form:

ESPs and other Non-LECs desire to control certain aspects of switch feature functionality to provide end user services; this may indicate a need for access to switch trigger queries. (The query would be the result of detection of a specified trigger at a designated point in call processing.)

The NIIF Issue #0006 Issue Identification Form can be found at www.atis.org.

5. SURVEYS - IN SWITCH VENDOR, IN SERVICE PROVIDER, AND LOCAL EXCHANGE CARRIER

The Information Industry Liaison Committee (IILC) developed and distributed surveys to various industry segments to determine the use and availability of AIN/IN switch triggers and events. There were three different surveys mailed, with follow-up reminders, from ATIS between August, 1995 and June, 1996. These mailings targeted the IN Switch Vendor community, IN Service Providers, and the Local Exchange Carriers. (See Letters and Attachments list below)

One of the key goals of the IILC was to solicit information to assist in assessing the technical feasibility for providing multiple providers with AIN/IN trigger capabilities for development of services. In order to accomplish this, two separate August 1995 mailings went to potential Intelligent Network (IN) Switch Vendors and to potential IN Service Providers.

A. Potential IN Switch Vendors Survey

The letters to fifty potential IN Switch Vendors[1] requested input in identifying estimated time frames for the availability of switch types and generics which were planned to support triggers. This survey included a request for a contact name, a matrix of potential AIN/IN Triggers and Events to be filled out by the Vendors, and a list of definitions of potential AIN/IN triggers and events. ATIS received five responses from the IN Switch Vendor community.

Letter to potential IN Switch Vendors, dated August 31, 1995, included (Appendix 1)

Cover Letter
Potential AIN Triggers and Events matrix
Potential AIN Triggers and Events Definitions

B. Potential IN Service Providers Survey

The letters to three hundred fifty potential IN Service Providers requested that a level of importance be assigned to each of the potential AIN/IN triggers and events. In addition, the letters requested identification of timeframes in which the triggers and events would be needed. ATIS received twenty-four responses from this industry segment.

Letter to potential IN Service Providers, dated August 31, 1995, included (Appendix 2):

Cover Letter

[1] The potential IN Switch Vendors included Intelligent Peripheral Vendors, Service Control Point Vendors, as well as Switch Vendors

Potential AIN Triggers and Events Response Form
Potential AIN Triggers and Events Definitions

C. Follow Up Activities

In an attempt to increase the number of responses from the potential IN Switch Vendors and the potential IN Service Providers, the IILC sent a reminder letter (identical to the initial mailing) including all attachments on November 2, 1995. The committee wanted to be certain that both of these communities had ample opportunity to reply to the very complex issues sent to them. This mailing did not generate any additional responses. Therefore, on January 23, 1996, a third and final follow up memo was sent to potential IN Service Providers.

Reminder memo to potential IN Service Providers, dated January 23, 1996 (Appendix 3):

D. Local Exchange Carrier Surveys

Subsequent to the IILC compiling the responses to the above two mailings, letters were sent to twenty seven Local Exchange Carriers. These letters requested a response covering each of the AIN/IN triggers and events with respect to an estimated time of availability to third parties and possible mechanisms for access based on these compiled responses. ATIS received one response from this industry segment.

Letter to Local Exchange Carriers, dated June 21, 1996, included (Appendix 4):

Cover Letter
Projected AIN/IN Trigger Availability
Point of Interface Descriptions requests
Potential AIN Triggers and Events Definitions
Composite of completed Potential Service Provider Response forms
Composite of completed Availability of Switch Triggers and Event
Detection Points IN Switch Vendor form

6. ROUTING ALTERNATIVES

The NIIF's Network Interconnection Architecture Committee received and evaluated four routing alternatives for use when interconnecting an alternate service provider's AIN/IN SCP platform to another provider's AIN/IN switch via the SS7 public network. The primary purpose for this activity was to identify methods by which AIN/IN triggers could be made available for multi-provider provision of services.

This section describes the four routing alternatives and Section 7 defines a set of criteria against which the industry could evaluate them. Neither the four routing alternatives nor the criteria list represent an exhaustive list of all possibilities for evaluation.

The intent of the committee in this evaluation process was to identify routing alternatives that do not advantage one provider or class of providers over another, or favor one service user over another. The submitted criteria matrices did not indicate that any one of the four routing alternatives was preferable. Therefore, no attempt was made to select one of the four routing alternative as "best" because of variations in existing and planned AIN /IN configurations, multiple address and routing possibilities, and existing operational support systems.

Existing SS7 Routing:
In existing SS7 signaling networks, the addressing and routing of AIN/IN queries has relied on the global translation process based on a Translation Type (TT) and the Global Title Address. This information is used to provide an index into an STP based table to yield a SS7 Point Code (PC) and Subsystem Number

(SSN) to route the query. These networks are not capable of allowing an end user to access the same AIN/IN services from more than one service provider's database(s).

Routing Alternative Summaries:
Signaling networks should be able to support access to AIN/IN triggers in a multiple service provider environment. Four SS7 routing alternatives, also based on TT and GTA, were received from various companies for consideration. The four routing alternatives are included in this document in the form of unedited technical contributions. Each of the four routing alternatives suggests the capabilities needed to achieve this access. The complete text of the four routing alternatives follows the summary descriptions below:

TT/SP: (Translation Type per Service Provider)
This routing alternative proposes that existing SS7 signaling capabilities could be used to provide internetwork AIN/IN message routing. In this proposal, a unique SS7 Translation Type would be assigned to each AIN/IN Service Provider for access to AIN/IN services. Mediation devices are not considered in this approach.

10 Digit GTT: (10 Digit Global Title Translation without mediation)
This routing alternative proposes the use of a 10 Digit Global Title Translation (GTT) to provide internetwork AIN/IN message routing. In this proposal, a 10 Digit GTT would provide a unique identification given the SS7 Translation Type (AIN TT = ?), Subsystem Number and the 10 Digit Directory Number of the subscriber. Mediation devices are not considered in this approach.

RTG SCP: (Routing Service Control Point with mediation)
This routing alternative proposes the use of a mediation point that acts as a device to provide internetwork AIN/IN message routing. In this proposal, a LEC's SSPs would interact with Service Providers' SCPs through the LEC's mediation point. The mediation point would translate and correlate SS7 messages between the LEC's SSPs and Service Providers' SCPs.

TT8: (10 digit GTT, SCP-Assisted Call Processing Using TT=8)
This routing alternative proposes the use of a mediation function located in a new network element, an SSP or an SCP to provide internetwork AIN/IN message routing. In this proposal, the originating network would use only the first six digits for routing to the destination network, and the destination network would use the full 10 digits for routing to a specific application within its network.

ROUTING ALTERNATIVES

TT/SP: TRANSLATION TYPE/SERVICE PROVIDER (6 DIGIT)

Introduction

This contribution describes a proposal for routing of SS7 signaling TCAP messages between an ILEC signaling network and the signaling network of Alternate Service Providers (ASP). This proposal is based on routing to Alternate Service Provider networks utilizing SS7 signaling capabilities (i.e. STP, and SCP), and on the assignment of dedicated SS7 internetwork AIN/IN Translation Type (TT) to these providers.

This proposal assumes that the SS7 network provides the MTP and SCCP message screening functions. These functions can also be enhanced (e.g. screening and network management) in the future if SS7 remains the means for the delivery of AIN triggers across network boundaries.

Network Architecture

Two network routing alternatives are presented in Figures 1 and 2. Figure 1 shows a network architecture for the delivery of AIN Triggers to an Alternate Service Provider that has an its own SS7 network (i.e. STP, SCP, etc). Figure 2 shows a routing alternative where the Provider has no STP, but uses an SCP/data base to support AIN services to his customers.

The network architecture shown in Figures 1 and 2 utilizes existing SS7 infrastructure to interconnect the ILEC switches with the ASPs SCPs and databases. The routing is based on the Calling Party Number, the AIN trigger type, and the specified routing address found in the Translation Type table. The D-link may be used across network boundaries. Existing SS7 message flows are assumed to also be used for the delivery of Queries and Responses back to the affected network nodes.

Mediation Point

The issue of a Mediation Point in the network was recently introduced in the BellSouth contribution to the IILC for Issue 049 (now NIIF Issue #006). Mediation point hardware and software functionality must be validated by the performance of pre- and post-application testing between network operators, and between network operators and Enhanced Service Providers. It is felt that the introduction of a mediation gateway in the network will not only cause delays in the delivery of AIN services to the customers, but may also cause network congestion.

Proposal

This contribution proposes that SS7 signaling messages be used to route TCAP messages between the ILEC signaling network and that of an Alternate Service providers using the existing SS7 infrastructure. The use of mediation points/gateways need to be validated by the performance of AIN pre- and post-application testing. It is proposed that this interconnection method of third party access to AIN trigger points be included in the resolution of NIIF Issue #0006.

This contribution has been prepared by MCI in order to assist the NIIF/NIAC in its discussions and is not to be considered a binding proposal on MCI or any of its representatives. The authors reserve the right to change, amend or withdraw the statements contained herein at any time, for any reason.

Figure 1 - AIN Interconnection to ASP with STP

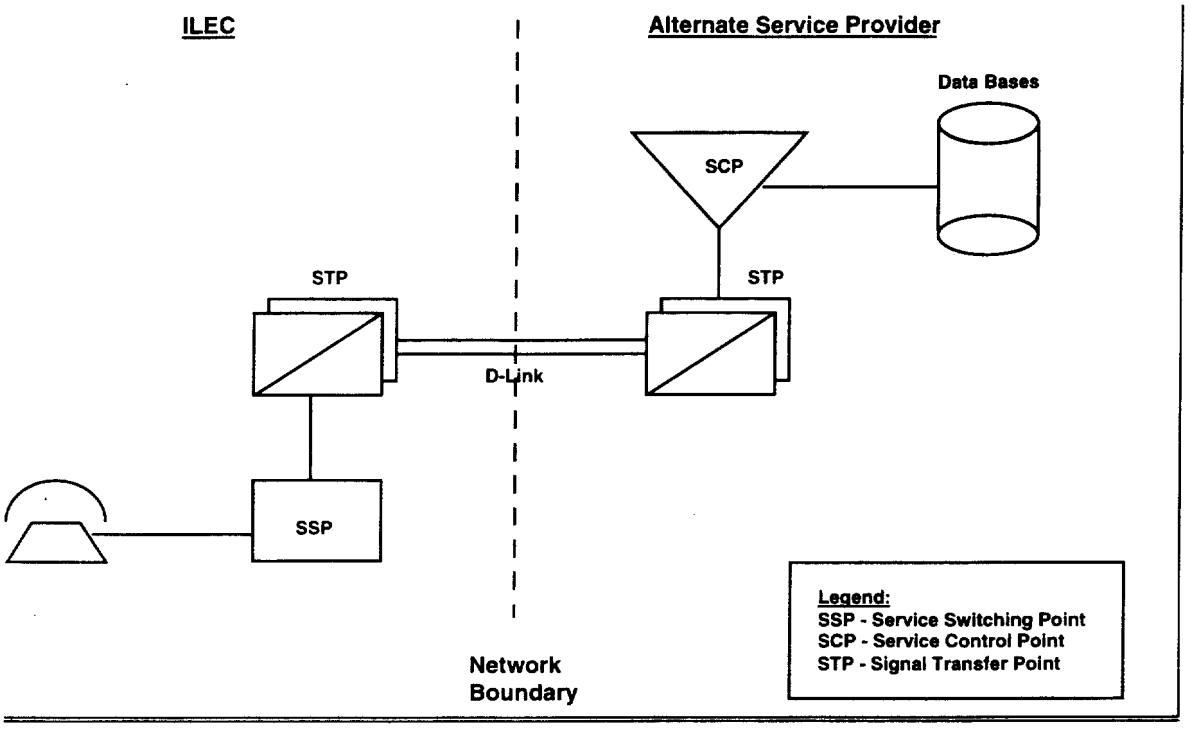

This contribution has been prepared by MCI in order to assist the NIIF/NIAC in its discussions and is not to be considered a binding proposal on MCI or any of its representatives. The authors reserve the right to change, amend or withdraw the statements contained herein at any time, for any reason.

Figure 2- AIN Interconnection to ASP without STP

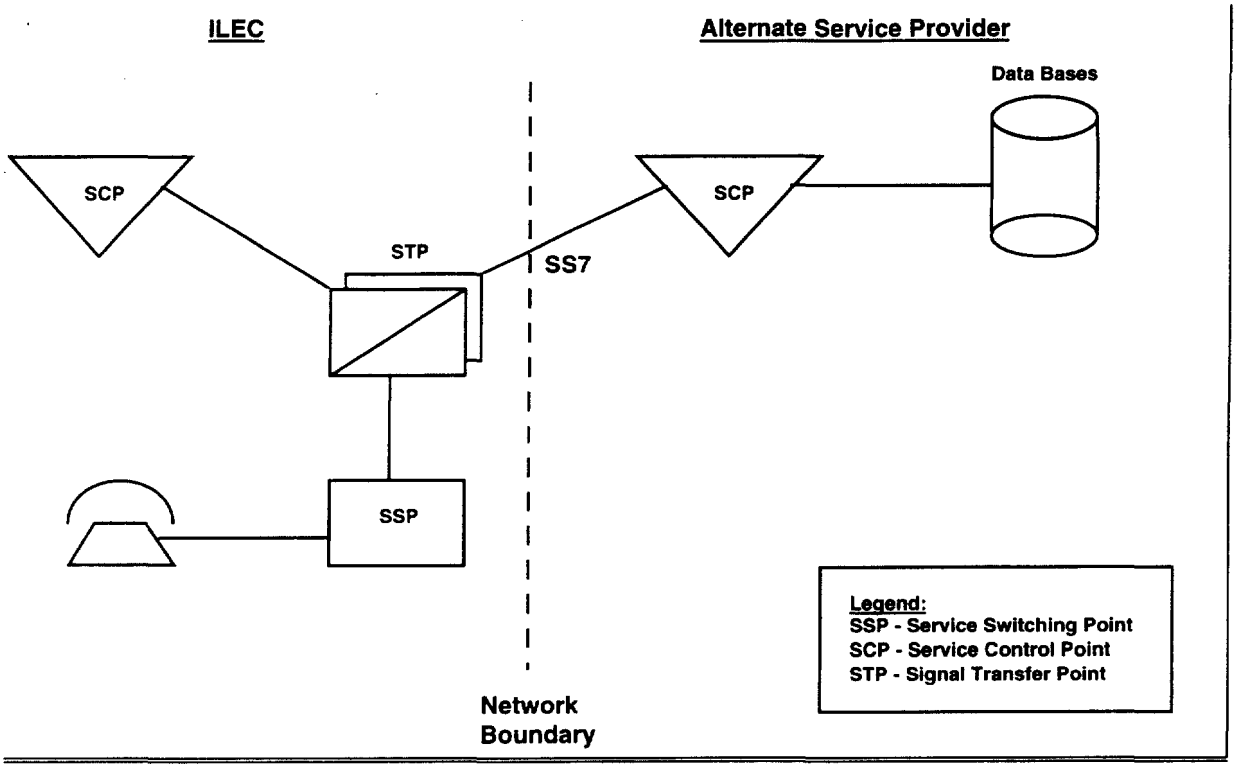

This contribution has been prepared by MCI in order to assist the NIIF/NIAC in its discussions and is not to be considered a binding proposal on MCI or any of its representatives. The authors reserve the right to change, amend or withdraw the statements contained herein at any time, for any reason.

10 DIGIT GTT: 10 DIGIT GLOBAL TITLE TRANSLATION (10 DIGIT WITHOUT MEDIATION)

INTRODUCTION

At the January meeting, a contribution was introduced for Issue 0006 (AIN/IN Trigger Usage in a Multi-Provider Envirnment) that proposed the assignment of a dedicated SS7 internetwork translation type (TT) to each alternate service provider (ASP) for the same application.

DEFINITIONS

I believe that the ANSI T1.112-1996 SCCP document defines the translation type as a one-octet field that is used to direct the message to the appropriate global title translation function. A translation type may for instance imply a specific service to be provided by the SCCP-user, such as 800 number translation, or identify the category of service to be provided, for example, dialed number screening, password validation, or translation of digits to telephone network address.

INTERPRETATION

It would appear that the number of translation types supported by SCCP is a maximum of 256 under the existing one-octet field in the definition. The Carrier Identification Code (CIC) field has been increased to a four digit field from the original three digit field to accommodate the need to support more than 1000 carrier codes.

The proposal to have a dedicated translation type for each ASP for the same application, times the number of applicable applications (I believe that T1S1.3 has now agreed to standardize appropriately 20 translation types. Even if only one application may be initially applicable, the potental for others in the future does exist.), would immediately far exhaust the number of translation types in SCCP.

An increase to a two-octet field would require a modification to the ANSI SS7 SCCP requirements. A request for such a modification would generally require a discussion at the T1S1.3 meetings as to the proposed problem resulting in the need for the extension and the use intended. If the SCCP were to be modified by T1, a new problem occurs during the lengthy transition period where some nodes in the network would be able to only understand the one octet message, while other nodes would be using the two octet format. This would require new procedures for interworking and could limit the availability of the two octet format supported translation types.

SUGGESTED COURSE OF ACTION

Perhaps it would be most useful to clearly restate the "need" and take a fresh start at exploring all of the potential mechanisms that might be employed to resolve that "need", rather than to focus on dedicated translation types as the best potential solution.

As a single example of what might be a possible, viable technical alternative that is consistent with current standards, the use of 10 digit Global Title Translation could be considered. Such a translation would provide a unique identification given the AIN Translation Type, Subsytem Number, and the 10 digit Directory Number of the subscriber. While such an approach would require 10 digit GTT, it may be the case that mechanisms are being developed to support such translations for the Local Number Portability application.

This contribution has been prepared by AGCS in order to assist the NIIF/NIAC in its discussions and is not to be considered a binding proposal on AGCS or any of its representatives. The authors reserve the right to change, amend or withdraw the statements contained herein at any time, for any reason.

RTG SCP: ROUTING SERVICE CONTROL POINT (WITH MEDIATION)

This report describes a proposed alternative for the routing of TCAP queries between the LEC signaling network and the signaling networks of Other Service Providers (OSPs). This proposed routing alternative is based on the Internetwork Translation Type 8 and the ten digit global title translation capability of a "gateway" service control point (SCP) or mediation point.

The basic principle is that the mediation point acts as a large virtual SCP from the point of view of the SSPs in LEC's network. From the point of view of the OSP the mediation point acts as a large virtual SSP. The LEC SSPs interact only with mediation point and similarly, the service SCPs in the OSP network interact only with mediation point. It is the job of mediation point to translate and correlate between the LEC SSPs and the OSP SCPs.

2 Environment

Figure 1 shows the configuration of network elements involved in the mediation point and the flow of messages between elements. The diagram shows multiple SSPs in the LEC network and multiple SCPs in the OSP network providing call processing logic.

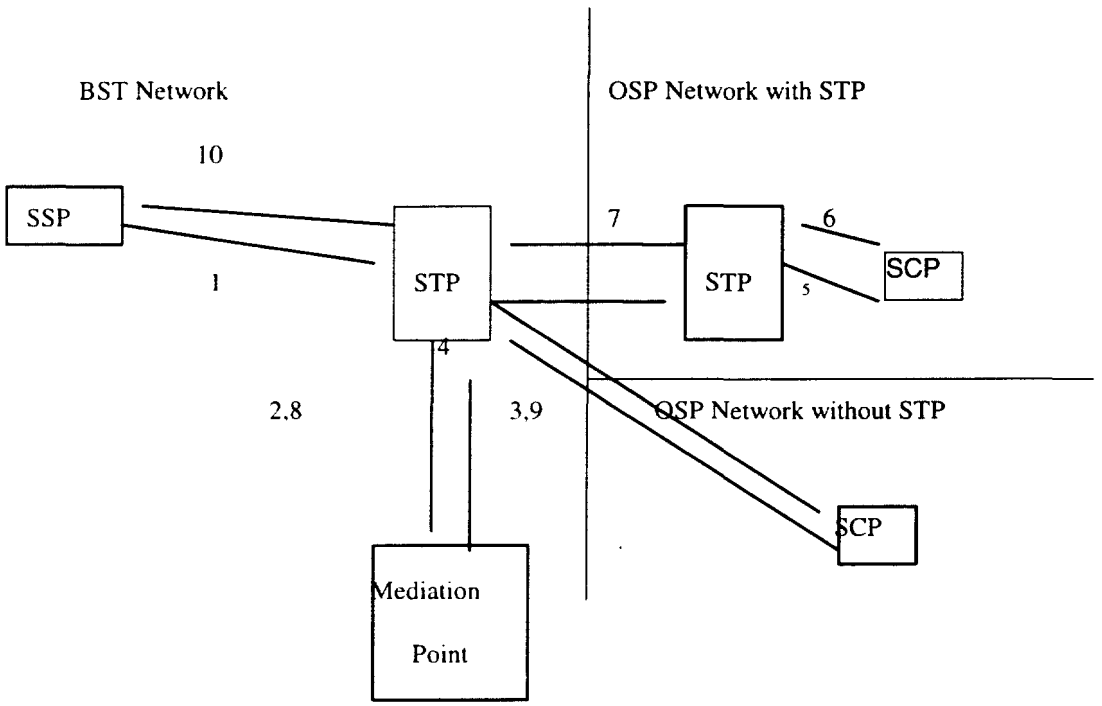

This contribution has been prepared by BellSouth in order to assist the NIIF/NIAC in its discussions and is not to be considered a binding proposal on BellSouth or any of its representatives. The authors reserve the right to change, amend or withdraw the statements contained herein at any time, for any reason.

The mediation point implements certain mediation functions that are necessary to offer Open AIN services. One of these functions is the routing of each query to the OSP designated by the end user or subscriber. It is assumed it will be necessary to support multiple OSPs and each subscriber trigger may be assigned to a different OSP. The mediation point must maintain the mapping of subscriber/trigger pair to OSP. Traffic engineering will determine the capacity and deployment of mediation point units.

3 Message Flows

The messages in figure 1 are described in the following sections. The parameters relevant to message routing, Subsystem Number (SSN), Translation Type (TT), Global Title Address (GTA) and Point Code (PC) are described for each message as well as the translation or processing performed by the sending element of that message.

The SCCP level of the SS7 protocol contains the destination address, the Called_Party_Id and the source address, the Calling_Party_Id. SS7 routing is controlled by these two parameters. The format, content and interpretation of these parameters is defined in the Bellcore specifications.

3.1 Query Message From SSP to SCP

3.1.1 SSP to LEC-STP

The SSP encounters a trigger detection point in a call. It sends a TCAP query message with SCCP Called_Party_Id parameter set as follows:

SSN = 0

TT = LEC-OAIN (where the LEC-OAIN represents an internetwork translation type chosen by the LEC specific to its Open AIN service offering)

GTA = provisioned in SSP according to trigger type

PC = LEC-STP

3.1.2 LEC-STP to Mediation Point

The LEC STP performs final global title translation and forwards the query to the mediation point with SCCP Called_Party_Id parameter set as follows:

SSN = LEC-OAIN

PC = Mediation Point

All other SCCP routing parameters are unchanged.

This contribution has been prepared by BellSouth in order to assist the NIIF/NIAC in its discussions and is not to be considered a binding proposal on BellSouth or any of its representatives. The authors reserve the right to change, amend or withdraw the statements contained herein at any time, for any reason.

3.1.3 Mediation Point to LEC-STP

The mediation point creates a new query with SCCP Called_Party_Id parameter set as follows:

SSN = OSP-SSN

TT = OSP-TT

GTA = OSP-GTA (possibly the original GTA supplied by the SSP)

PC = OSP-PC

These values are set by the OSP to meet the routing needs of that network. Since the destination point code refers to a network element in the OSP network no further translation will take place in the LEC network.

The Calling_Party_Id SCCP parameter contains SSN = LEC-OAIN and PC = mediation point. This provides the address for the SCP response messages.

The TCAP message parameter values are taken from the original query message with the Open AIN service mediation functions applied as appropriate.

3.1.4 Across Network Boundary

3.1.4.1 Large OSP Network With STP

A large OSP network is one that interconnects with the LEC network with B links or D links between the OSP STP and the LEC STP. The LEC-STP does NO global title translation. It merely forwards the query to OSP-STP without modifying any parameters. The OSP-STP may do final global title translation as necessary and sends query to the SCP.

3.1.4.2 Small OSP Network Without STP

A small OSP network is one that interconnects an SCP to the LEC STP via A links. The LEC-STP does NO global title translation. It merely forwards the query to the OSP SCP without modifying any parameters.

3.2 Response Message From SCP to SSP

The OSP SCP processes the query following the logic defined by the OSP. It creates a response message that is returned to the mediation point using the Calling_Party_Id SCCP parameter in the query message.

3.2.1 Across Network Boundary

The OSP SCP creates a response message with the Called_Party_Id SCCP parameter set to the destination address of SSN = LEC-OAIN and PC = Mediation Point. These values are taken from the query message. This message invokes no SS7 translations and so is transmitted directly to the LEC-STP in a small OSP

This contribution has been prepared by BellSouth in order to assist the NIIF/NIAC in its discussions and is not to be considered a binding proposal on BellSouth or any of its representatives. The authors reserve the right to change, amend or withdraw the statements contained herein at any time, for any reason.

network without a STP. In the large OSP network with a STP, the response message is forwarded by the OSP-STP to the LEC-STP.

3.2.2 LEC-STP to MEDIATION POINT

This STP also does no translation merely routing the message to the mediation point.

3.2.3 Mediation Point to LEC-STP

The mediation point matches the response message from the OSP with the original query message from the LEC SSP. The response message sent to the LEC SSP is constructed from the OSP response with the destination address set to SSN = LEC-OAIN and PC = LEC-SSP. The TCAP parameters are populated with the values received from the OSP after the Open AIN service mediation functions are applied.

3.2.4 LEC-STP to SSP

The STP does no translation, it just routes the message to the LEC SSP.

3.3 Unidirectional Messages From OSP

Unidirectional messages are not indicated in the figure above. However, the same general strategy will allow the OSP to send unidirectional messages as allowed by the Open AIN service by using the predetermined PC, TT and SSN of the mediation point. The GTA should be the same value as would be received in a query message.

4 Traffic Management

Since the OSP SCPs may experience overload conditions the mediation point must support call gapping requests in a way that honors the SCP request without interfering with the operation of other OSPs. For this reason the mediation point will process and implement call gapping requests received as ACG components or ACG unidirectional messages from the OSP. If necessary, the mediation point will initiate its own ACG requests to limit traffic from the SSPs.

There are many other traffic management issues to be resolved prior to providing Open AIN service. These include capacity management, link congestion, link outage, guaranteed transaction rates. This work must be addressed at a future date.

5 Summary

This proposed method of routing messages between the LEC and OSP signaling networks would meet the needs of the Open AIN service to support future AIN service providers in a fair, open and secure manner ensuring high quality of service and efficient use of network resources.

This contribution has been prepared by BellSouth in order to assist the NIIF/NIAC in its discussions and is not to be considered a binding proposal on BellSouth or any of its representatives. The authors reserve the right to change, amend or withdraw the statements contained herein at any time, for any reason.

TT8: TRANSLATION TYPE #8 (10 DIGIT GTT, SCP-ASSISTED CALL PROCESSING APPLICATION)

Introduction

In the existing telecommunications network, the addressing and routing of AIN queries has relied on the traditional Global Title Translation (GTT) process which is based on a Translation Type (TT) being assigned by service and the Global Title Address (GTA) used to provide an index into an STP based table to yield a SS7 Point Code (PC) and Subsystem Number (SSN) to route the query. In a multi-provider environment, the use of Translation Types has become a significant issue. A number of companies have suggested that each AIN Service Provider be assigned their own Translation Type. Many companies have objected to this assignment because the Translation Type is a finite resource (i.e., values from 1-255) which does not have sufficient values available for allocation of a unique TT value to each AIN Service Provider .

Network Addressing and Routing Schemes

The network node (SCP) that contains the call processing service logic or customer information may not reside in the network of origin (i.e., "off-network"); therefore, inter-network messaging will occur. For this reason, the traditional "home network" SSP-SCP routing scheme is inadequate. A possible solution to addressing and routing in a multi-service provider environment is to adopt a two scheme addressing and routing process.

- The first of these schemes is to utilize the traditional Global Title Translation process for SSP-SCP addressing and routing within the "home network" (e.g., between the LEC-SSP and the LEC-SCP).

- "Off-network" addressing and routing will utilize a newly assigned Translation Type, TT# 8, in conjunction with the SCP "Assisted Call Addressing and Routing" concept.

SCP Assisted Call Addressing and Routing

In SCP "Assisted Call Addressing and Routing", the Global Title Address (GTA) is being considered to address the concept of a Service Control Point (SCP) suspending an existing query/response process to launch a secondary query for additional data from another SCP in the network. This expanded address format could be applied to the concept of mediation in that the initial query would be routed to the mediation point instead of a traditional SCP. The mediation functions would be initiated in this node for appropriate screening of the query for validity and access restrictions. In addition, the initial query would be held in queue while the mediation node would then initiate a query, using translation type 8, for SCP-assisted call processing back to the network. Upon response from the network back to the mediation point, the response will be then re-associated with the initial query, the initial and response messages (TCAP) would be compared to a set of mediation logic "rules", and the mediation point will route the mediated response back to the originating SSP.

One of the significant issues associated with this SCP-Assisted Routing is that the Global Title Address (GTA) takes on a new format, as shown in figure below. The GTA is defined as 10 digits with the first 6 being defined as Location Specific and the last 4 as Application Specific. The intent is for the first six digits to define a SS7 Network and Cluster ID while the last four digits to represent a value from 0000 to

9999 to associate with an specific application. The routing within the originating network will use the first six digits of the GTA for translation and the full 10 digit GTA would have routing significance within the

This contribution has been prepared by GTE in order to assist the NIIF/NIAC in its discussions and is not to be considered a binding proposal on GTE or any of its representatives. The authors reserve the right to change, amend or withdraw the statements contained herein at any time, for any reason.

destination network.

Location Specific Part		Application Specific Part			
SS7 Network ID (0-256)	SS7 Cluster ID (0-256)	X	X	X (0000-9999)	X

Figure 1 SCCP 'Assisted Global Title Translation"

Multi-Service Provider Environment

Figure 2 shows the configuration of network elements involved in the mediation point and the flow of messages between network elements in a multi-service provider environment. The diagram shows multiple SSPs in the LEC network and multiple SCPs in the alternate service provider network providing call processing logic.

The mediation point implements certain mediation functions that are necessary in the routing and analysis of AIN-TCAP messages within a multi-service provider environment. One of these functions is the addressing and routing of each query to the alternate service provider designated by the end user or subscriber. For interoperability between networks, the mediation point will need to maintain the mapping of subscriber/trigger pair to alternate service provider.

Message Flow Summary

A. SCCP Addressing:

The Called and Calling Party Addresses contain the information necessary for the SCCP to determine an origination and destination node

Two basic categories of addresses are distinguished in SCCP routing for messages:

- Global Title: An address such as dialed-digits, which does not explicitly contain information that would allow routing in the signaling network. SCCP translation is required.

- PC + SSN: A Point Code and Subsystem Number allow direct routing by the SCCP and the MTP (i.e., SCCP translation is not required). The point code from the called address is used as the Destination Point Code (DPC) in the routing label. In the calling address, the point code is either supplied by the Calling Party Address parameter, or if not present, by the Origination Point Code (OPC).

If a reply or a message return is required, the Calling Party Address plus the OPC in the routing label must contain sufficient information to uniquely identify the originator of the message. If the query message

requires global title translation where the OPC may change, then the Calling Party Address must contain the OPC and an SSN.

This contribution has been prepared by GTE in order to assist the NIIF/NIAC in its discussions and is not to be considered a binding proposal on GTE or any of its representatives. The authors reserve the right to change, amend or withdraw the statements contained herein at any time, for any reason.

B. SCCP Basic Routing:

The message routing depicted in figure 2 is described in the following sections. The parameters relevant to message routing, Subsystem Number (SSN), Translation Type (TT), Global Title Address (GTA) and Point Code (PC) are described for each message as well as the translation or processing performed by the sending element of that message.

The SCCP level of the SS7 protocol contains the destination address, the Called_Party_Id and the source address, the Calling_Party_Id. SS7 routing is controlled by these two parameters. The format, content and interpretation of these parameters is defined in the SSCP standard ANSI T1.112.

As an example, the following uses the call flow to illustrate the routing of AIN messages in a multi-service provider environment. In the example provided, an alternate service provider's network offers a simple AIN based "Follow-Me Service" to a subscriber (DN 214-661-4133) residing on the LEC SSP. Utilizing the alternate service provider's SCP service logic, calls terminating to 214-661-4133 will be selectively routed in either the subscriber's work phone number (M-F during working hours) or to the subscriber's home phone number, other times.

1, 2	**Query Message from the SSP to the LEC-STP:** Call to 214-661-4133 results in a terminating attempt trigger (TAT) being detected and a query message is routed to the LEC-STP. The LEC-SSP sends a TCAP query message with SCCP Called_Party_Id parameter set as follows: SSN = 0 TT = LEC-OAIN (where the LEC-OAIN represents an inter-network translation type chosen by the LEC specific to its Open AIN service offering) GTA = determined by SSP according to trigger type (214-661-4133 for this example) PC = LEC-STP The SCCP Calling_Party_Id parameter as follows: SSN = LEC SSP Assigned for AIN 0.1/0.X switch application PC = LEC SSP Assigned Signaling Point Code and the TCAP portion of the message will contain a "Transaction ID" assigned by the SSP to uniquely identify this TCAP message from other TCAP messages
3	**Query Message from the LEC-STP to Mediation Point**: The LEC STP performs final global title translation and forwards the query to the mediation point with SCCP Called_Party_Id parameter set as follows: SSN = LEC-OAIN PC = Mediation Point (Note: All other SCCP routing parameters are unchanged.)

This contribution has been prepared by GTE in order to assist the NIIF/NIAC in its discussions and is not to be considered a binding proposal on GTE or any of its representatives. The authors reserve the right to change, amend or withdraw the statements contained herein at any time, for any reason.

4	**Mediation Point functions and routing of the Query Message to the LEC network:** The Mediation point receives the query message from the SSP. The Mediation point looks into the database and finds that the TAT for 214-661-4133 should be routed to the LEC "A". The Mediation point stores the context of the query message and creates a new query with the SCCP Called_Party_Id parameter set as follows: SSN = LEC/ASP-SSN (could also be null) TT = LEC/ASP-TT (could be the "SCP Assisted Routing" value of 8) GTA = LEC/ASP-GTA (either the original GTA supplied by the SSP or the "SCP Assisted Routing GTA") PC = LEC/ASP-PC (also used as the Destination Point Code in the routing label) In addition, the mediation point will assign a new "Transaction ID" to the TCAP portion of the message. Notes: 1. As shown in Figure 2, the Mediation point has a database table that includes information such as DN/PODP assignment within the network (i.e., the home network, as well as, the LEC/ASP network); the specific trigger assigned (i.e., TAT); the routing address of the LEC or LEC/ASP having the service logic specific to trigger assignment; and the carrier's (i.e., LEC or LEC/ASP) CIC code. The Mediation point data base is updated by the LEC and LEC/ASP through the LEC's SMS/SME. 2. These values are set by the LEC/ASP to meet the routing needs of that network. Since the destination point code refers to a network element in the LEC/ASP network no further translation will take place in the LEC network. 3. The Calling_Party_Id SCCP parameter contains SSN = LEC-OAIN and PC = mediation point. This provides the address for the SCP response messages. The TCAP message parameter values are taken from the original query message with the Open AIN service mediation functions applied as appropriate.
5, 6	**The Query Message is sent across the Network boundary to the LEC/ASP - PC:** The LEC-STP performs MTP routing to the LEC/ASP-PC and sends the TCAP query message to the LEC/ASP-PC. The LEC-STP does NO global title translation. It merely forwards the TCAP query to LEC/ASP-PC without modifying any parameters. The LEC/ASP-PC can either be the LEC/ASP SCP or the LEC/ASP STP performing global title translation. The LEC/ASP STP will route the query message to the appropriate LEC/ASP SCP.
7, 8	**The Response Message from the CLEC-SCP to the LEC-Mediation Point:** The LEC/ASP-SCP processes and interprets the TCAP query message and provides a response message with the Called_Party_Id SCCP parameter set to the destination address of SSN = LEC-OAIN and PC = Mediation Point.. This response message is returned to the mediation point using the Calling_Party_Id SCCP parameter contained in the query message. The PC of the mediation point is also inserted into the routing label Destination Point Code field. The response message is transmitted to the LEC mediation point via MTP routing. The response TCAP Transaction ID will be the same as the one received from the mediation point.

This contribution has been prepared by GTE in order to assist the NIIF/NIAC in its discussions and is not to be considered a binding proposal on GTE or any of its representatives. The authors reserve the right to change, amend or withdraw the statements contained herein at any time, for any reason.

9, 10	**Mediation Point to the LEC-SSP:** The Mediation Point receives the TCAP response message from the LEC/ASP-SCP and performs the Mediation Functionality. The message is re-formatted in association with the context constructed from the LEC/ASP response with the destination address set to the SCCP Calling_Party_Id parameter received in the original LEC SSP TCAP query and the TCAP Transaction ID received in the original LEC SSP query. The Signaling Point Code received in the Calling_Party_Id parameter of the original LEC SSP query message is also used as the Destination Point Code in the routing label. The TCAP parameters are populated with the values received from the LEC/ASP after the Open AIN service mediation functions are applied. The response message is MTP routed to the originating SSP.
11	**The LEC SSP processes the response message:** The LEC SSP receives the TCAP response message containing the routing information necessary to complete the call.

This contribution has been prepared by GTE in order to assist the NIIF/NIAC in its discussions and is not to be considered a binding proposal on GTE or any of its representatives. The authors reserve the right to change, amend or withdraw the statements contained herein at any time, for any reason.

Figure 2 SCP Assisted Call Routing

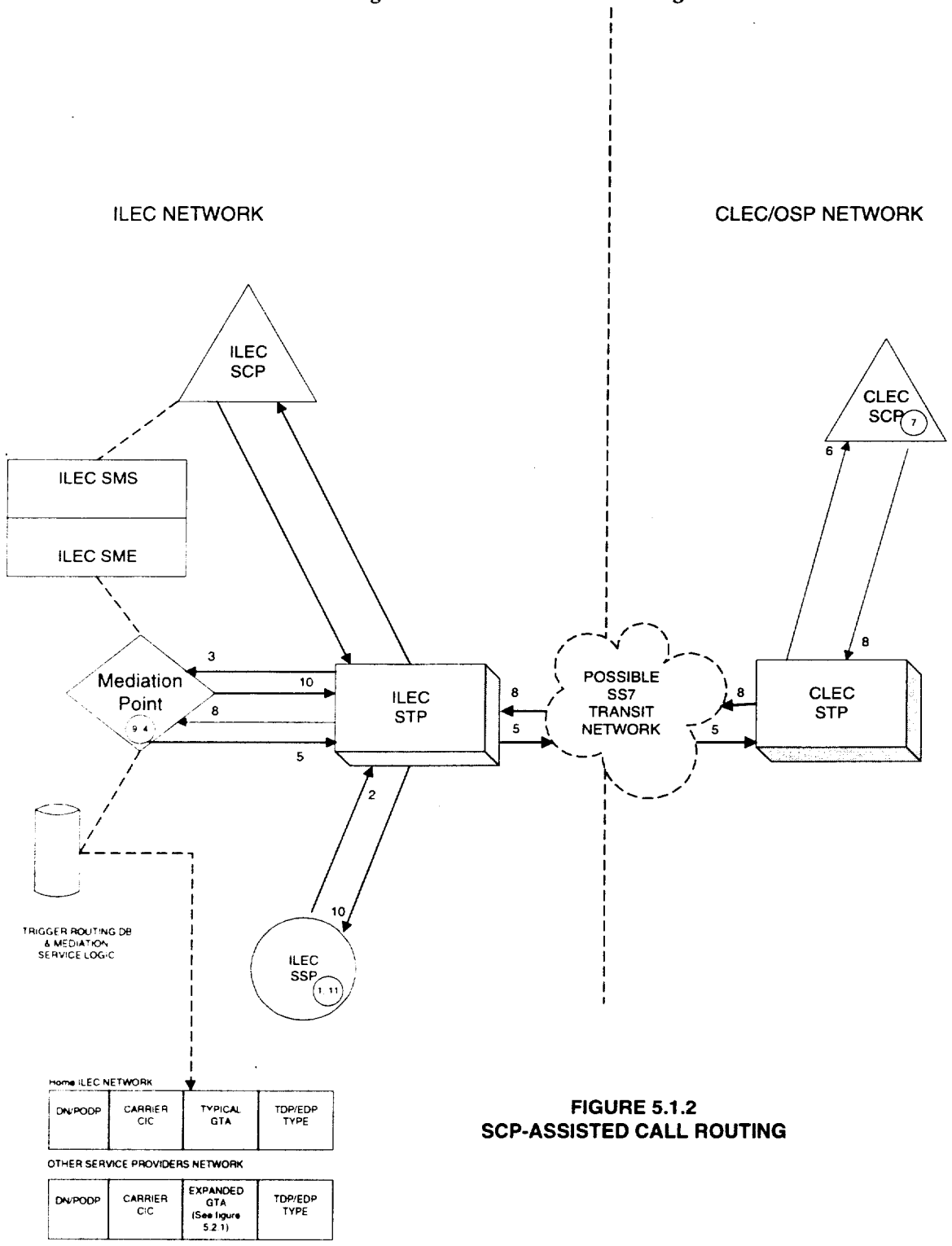

FIGURE 5.1.2
SCP-ASSISTED CALL ROUTING

This contribution has been prepared by GTE in order to assist the NIIF/NIAC in its discussions and is not to be considered a binding proposal on GTE or any of its representatives. The authors reserve the right to change, amend or withdraw the statements contained herein at any time, for any reason.

7. Evaluation criteria

Defined below are the evaluation criteria identified for the four proposed alternatives listed above. Twenty seven criteria were used in the evaluation process. Each criterion was considered for its relative merit to the four proposed alternatives.

Criteria Definitions for Evaluating Routing Proposals

1. Conforms with Existing Standards - Proposed solution does not require changes in the SS7/AIN protocols.

2. No Adverse Impact on Network Reliability or Performance - Proposed solution does not increase network traffic beyond predefined congestion thresholds, nor adversely affect provision of any service nor the network's ability to meet published performance requirements such as availability and quality of service.

3. No Adverse Impact on Network Management Controls - Proposed solution does not have disabling or diminishing impact on network management controls. [*For example,* in the signaling network, Automatic Code Gapping (ACG) is a throttling mechanism invoked when SCP processing exceeds a pre-defined threshold and begins to suffer from degradation in performance. The effect of invoking ACG is to discard current messages and notify originating signaling points to reduce or cease messages (queries) to the affected destination point(s) based on the codes (e.g., NPA-NXX-XXXX) generating the overload.]

4. Implementible Using Existing Network Elements - Proposed solution would not require changes in the existing software and/or hardware at the SSP, STP and SCP.

5. Mediation Not Precluded - Proposed solution does not limit the ability of network and service providers to mediate the traffic flowing between their networks or between service platforms and networks, to assure the integrity, security, performance and privacy of users, networks, data and services.

6. No/Minimal Change to OSSs - Proposed solution can be implemented with no/minimal change to any operational support system, including ordering, billing (includes Service Specific Requirements), provisioning and maintenance systems.

7. Time to Network Deployment - Proposed solution can be deployed:
   - Now - Proposed solution requires less than one year to network deployment.
   - Short Term - Proposed solution requires from one to three years to network deployment.
   - Long Term - Proposed solution requires more than three years to network deployment.

8. Conserves Translation Types (TT) - Proposed solution does not accelerate the exhaust of TTs.

9. No Adverse Impact on Number Portability (NP) - Proposed solution is compatible with interim and long term number portability solutions.

10. Evolvable - Proposed solution does not preclude transition to subsequent routing solutions.

11. Architecturally Compatible - The proposed solution is consistent with existing network

architectural practices (e.g., does not change the relationship between specific NEs).

12. Scaleable - Proposed solution is readily expandable to accommodate additional networks, service providers or customers, as needed.

13. No Adverse Feature Interactions - Proposed solution causes no changes to existing interaction among features and services except those interactions desired by and/or acceptable to the parties using or affected by the features, services or resulting interactions.

14. Technically Feasible - There is no apparent technical obstacle to the proposed solution (i.e., it appears to be practical to make the necessary changes in the network provider's current network).

15. Supports Multiple Service Provider Environment - Proposed solution supports a multiple provider environment in one or more way(s):

    - allows multiple providers of AIN services to serve a single line using different triggers (such as Off Hook Immediate - OHI - and Terminating Attempt - TA), or different trigger types (such as originating vs. terminating).

    - allows multiple providers of AIN services to serve a single line using the same trigger, with the appropriate provider determined by time-of-day, digits dialed (PIN, TN), random selection, etc.

    - allows multiple providers of AIN services to use the same trigger to offer different services to the same customer and/or to serve different customers, based on digits dialed, line/translation table subscription indicators, service/provider gateway menus, etc. (e.g., *77 leads to gateway and menu for selecting provider and/or service.)

16. Supports Service Deployment on Multiple SCPs - Proposed solution does not preclude a service provider from provisioning the same service across multiple SCPs (destinations).

17. SCP/SSP Interconnection Not Precluded - Proposed solution does not prevent standard signaling interconnection of a network provider's SSP with a service provider's SCP.

18. No Adverse Impact on Wireless AIN - Proposed solution does not adversely affect any wireless AIN.

19. Universally Applicable - Proposed solution does not preclude application to more than one architecture (e.g., wireless, wireline, private, data, Computer-Telephony Intergration (CTI), etc.) or type of network provider (e.g., ILEC, CLEC, IXC).

20. Utility for Service Providers - Proposed solution is not a "roadblock" to effective offering of AIN services by service providers, based on cost or ease of use.

21. Ability to Bill - Proposed solution does not interfere with any provider's ability to accurately record and bill for the use of their services and identify users at the appropriate network element (e.g., SSP, STP, SCP, etc.).

22. No Adverse Impact on Service Unbundling - Proposed solution does not have any adverse impact on elements of service unbundling.

23. Competitively Neutral - Proposed solution does not advantage one provider or class of

providers over another, nor one user or class of users over another. The advantage could be reflected in terms of routing delays; availability and performance of services; access to capabilities and resources; and choices of providers.

24. Security/Privacy of Data Maintained - Any data that is proprietary to one network, service provider or customer cannot be inadvertently or intentionally accessed or changed by an unauthorized entity.

25. Fairness of Resource Usage - Proposed solution does not allow one service provider to monopolize availability of network resources to the exclusion or detriment of other providers, their customers or services.

26. Network Monitoring/Measurement Capabilities Maintained - Proposed solution allows network providers to continue, without impairment, to monitor and measure the use of their network by other providers. Revisions to monitoring/measuring capabilities, or new/different capabilities that would be introduced with the proposed solution, have been identified.

27. Triggers Identified - All AIN triggers accessible via the proposed solution have been identified and quantified.

7.1 EVALUATION MATRIX

The matrix below was developed as a tool to be used in the evaluation process of the four routing alternatives using the twenty seven evaluation criteria.

Various industry segments submitted position papers/contributions to the NIIF demonstrating a completed matrix using the criteria as a tool to explain their company's perspective while completing their evaluation. The variations in the completed matrixes received demonstrate the complexity in completing this important evaluation. Therefore, no ranking of the position papers/contributions was performed.

Evaluation Matrix

No.	Criterion	Proposal: 1 **TT/SP**	2 **10 dig GTT**	3 **Rtg SCP**	4 **TT8**
1.	Conforms w/ Existing Standards				
2.	No Adverse Impact on Ntwk Reliability or Performance				
3.	No Adverse Impact on Ntwk Mgmt Controls				
4.	Implementable Using Existing Ntwk Elements				
5.	Mediation Not Precluded				
6.	No/Minimal Change to OSSs				
7.	Time to Network Deployment (enter "**A**", "**B**" or "**C**") **A**. Now = < 1 year **B**. Short Term = 1 to 3 years **C**. Long Term = > 3 years				
8.	Conserves Translation Types				
9.	No Adverse Impact on Number Portability				
10.	Evolvable				
11.	Architecturally Compatible				
12.	Scaleable				
13.	No Adverse Feature Interactions				
14.	Technically Feasible				
15.	Supports Multiple Svc Provider Env'mt Enter "**N**" or "**Y-A**", "**Y-A,B**", etc.) **A**. Multiple AIN Providers., single line, diff. triggers **B**. Mult. AIN Prov., single line, same trigger **C**. Mult. AIN Prov., one/mult. lines, same trigger				
16.	Supports Svc Deploymt on Multiple SCPs				
17.	SCP/SSP Interconnection Not Precluded				
18.	No Adverse Impact on Wireless AIN				
19.	Universally Applicable (ntwk architec/ntwk provider)				
20.	Utility for Service Providers				
21.	Ability to Bill				
22.	No Adverse Impact on Service Unbundling				
23.	Competitively Neutral				
24.	Security/Privacy of Data Maintained				
25.	Fairness of Resource Usage				
26.	Ntwk Monitor'g/Measurem't Capabilities Maintained				
27.	Triggers Identified				