EX PARTE OR LATE FILED

Accessible

Southwestern Bell | SBC global network

RECEIVED
MAY 25 2000
FEDERAL COMMUNICATIONS COMMISSION
OFFICE OF THE SECRETARY

"New Product Announcement Wholesale Broadband Service – Arkansas, Kansas, Missouri, Oklahoma, Texas"

Date: May 24, 2000

Number: CLEC00-109

Contact: Southwestern Bell Account Manager

This Accessible Letter is intended to announce a new product to be made available by the SBC incumbent LECs (Southwestern Bell, Pacific Bell, Nevada Bell, Ameritech and SNET) to CLECs for the purpose of provisioning an xDSL service over the network architecture the SBC ILECs are deploying in conjunction with "Project Pronto."

"Project Pronto" is an investment by SBC in fiber, electronics and ATM technology to create a robust, comprehensive, data-centric broadband network architecture. One component of Project Pronto is the deployment of Next Generation Digital Loop Carrier ("NGDLC") which, through the deployment of fiber and ATM capacity, is designed to eliminate the loop length and qualification limitations traditionally associated with xDSL, thus providing broadband capability to approximately 80 percent of customer locations within SBC territory.

SBC BROADBAND WHOLESALE SERVICE

As a result of Project Pronto, the SBC ILECs are offering to CLECs a new "Broadband Service" that is an integrated network arrangement consisting of: a copper distribution sub-loop from the NGDLC device deployed in remote terminals to the end user location; a permanent virtual circuit that consists of ATM data transport over a common OC-3c fiber from the NGDLC in the remote terminal terminating on the central office fiber distribution frame and delivered to a leased CLEC port on the Optical Concentration Device ("OCD") in the serving wire center; and a port on the SBC ILEC's OCD with associated cross-connects to extend the port to a point of CLEC virtual or physical collocation and/or virtually collocated fiber frame or jack panel.

The SBC ILECs are also in the process of developing an additional network service arrangement to allow for the provisioning of an integrated voice and data xDSL service over this infrastructure. Such service arrangement is not available at this time – although general terms for this offering are in the attached Contract Language. An updated Accessible letter will be distributed to CLECs of the proposed time frame for the availability of this additional network service arrangement.

The SBC ILECs' new "Broadband Service" offering will be priced in each state in accordance with the pricing methodology applicable to Unbundled Network Elements ("UNEs") under Sections 251(c)(3) and 252(d)(1) of the Telecommunications Act of 1996.

PRODUCT AVAILABILITY

Due to the fact that "Project Pronto" involves a phased deployment over three (3) years of new network infrastructure, commercial deployment of the SBC ILECs' Broadband Service is dependent upon placement of the network architecture outlined above in a specific serving wire center. SBC's

deployment schedule for "Project Pronto" is available at the following URL: ***www.sbc.com/PublicAffairs/PublicPolicy/Home.html***.
In anticipation of such product availability, the SBC ILECs are willing to negotiate rates, terms and conditions for this Broadband Service with any requesting carrier based upon the SBC ILECs' proposed Broadband Service contract language and to include such terms in the CLEC's Interconnection Agreement with the SBC ILEC. However, the implementation of this product is expressly contingent upon satisfactory resolution of regulatory and Merger Conditions issues pending before the Federal Communications Commission ("FCC"). Thus, as described in the SBC ILECs' Broadband Service contract language, the SBC ILECs do not plan to commence operation or provision of the Broadband Service until such time as the issues pending before the FCC are fully resolved. The SBC ILECs reserve the right to change, modify and/or withdraw their Broadband Service, in their sole discretion, in whole or in part, as a result of regulatory developments, including but not limited to action or inaction on the matters pending before the FCC. Following resolution of the issues pending before the FCC, the SBC ILECs plan to make available an "interim" Broadband Service offering to enable wholesale customers to commence operations utilizing the Broadband Service while they negotiate and/or arbitrate final rates, terms and conditions for such Service.

ORDERING REQUIREMENTS

Ordering requirements for this offering can be divided into distinct flows – an infrastructure order and a related end user specific order. There will be many to one ratio of end user orders to infrastructure orders.

INFRASTRUCTURE ORDER FLOW

The infrastructure order will consist of the OCD port and related cross-connect. This network service arrangement will be ordered via an ASR. In addition to the ASR submitted for the OCD port and cross-connect, CLECs will be required to submit a CLEC Information Form ("CLIF") for each OCD port they establish. This form will contain logical information that the SBC ILECs are required to provision in the OCD to establish service for each OCD port. An overview of the CLIF form process and detailed ASR ordering specifications are provided in the attached document entitled "Broadband Service ASR Ordering Guidelines."

END USER SPECIFIC ORDER FLOW

The end user specific portion of the network service arrangement consists of the copper sub-loop from the remote terminal to the end user location and the establishment of the fiber feeder (including the permanent virtual connection) from the NGDLC equipment deployed in the RT to the serving wire center. This portion of the network service arrangement will be ordered via an LSR and specifications for that process were introduced March 10, 2000 and are under development as part of the change management process. Please reference the specific Accessible letters released for the May 27th change management release to obtain specific ordering requirements for the LSR portion of this service. These requirements were provided in conjunction with the LSR ordering requirements provided for the SBC ILECs' line sharing product offering.

CLEC PROFILE

In addition to the LSR and ASR required for the "Broadband Service", CLECs will also be required to utilize a new interface the SBC ILECs have developed for the provisioning of this service. This interface will serve to provide CLECs the indirect capability of establishing their preferred xDSL service in the SBC Network Management Systems supporting the "Project Pronto" architecture. This interface will allow CLECs to build a profile consisting of various service arrangements with different DSL parameters such as upstream and downstream bandwidth. CLECs will build such a profile and assign a unique numerical value to each optional service configuration they want to offer. Upon receipt of the LSR for

the end user arrangements described above, the SBC ILEC will provision the service assigned to such value.
Instructions specific to the use of this interface including the CLIF form process will be provided at a later date and will be covered in formal CLEC training sessions currently under development and anticipated to be conducted in early June.

The following attachments address this offering and material addressed above in more detail:

Attachment 1 – SBC Broadband Service - 13-State Contract Language
Attachment 1A – SBC Broadband Service - 13-State Rate Table
Attachment 2– SBC Broadband Service - CLEC Overview
Attachment 3 – SBC Broadband Service – ASR Ordering Guidelines

CLEC FORUM

The SBC ILECs will hold a CLEC forum on this product offering on June 15, 2000 for all interested parties. The meeting logistics will be as follows:

Meeting Date: June 15, 2000
Meeting Location: Dallas, TX One Bell Plaza Concourse Auditorium
Meeting Time: 1-5 PM CST

Parties interested in attending this CLEC Forum should contact *Christopher.Boyer@sbc.com* no later than June 9, 2000. A preliminary agenda and additional materials will be provided via e-mail by close of business June 14, 2000.

In addition to the CLEC Forum outlined above, the SBC ILECs plan to conduct monthly collaborative meetings with interested CLECs to discuss future product enhancements and open issues involving provisioning and installation issues. Such collaborative meetings will commence following resolution of the issues currently pending before the FCC and upon commercial availability of the product offering. The SBC ILECs will also provide external CLEC training on ordering and provisioning of this product offering including the use of the Internet interface as described above. Such training is anticipated to be available in the early June time frame and provided on an ongoing basis.

Please address any questions on this announcement to the appropriate SBC ILEC account manager.

ATTACHMENT 1:

APPENDIX BROADBAND SERVICE

APPENDIX BROADBAND SERVICE

1.0 INTRODUCTION

1.1. This Appendix sets forth the terms and conditions for providing a Digital Subscriber Line ("DSL") service utilizing Next Generation Digital Loop Carrier ("NGDLC") equipment deployed in conjunction with SBC Communications Inc. ("SBC") Broadband Infrastructure project (i.e., Digital Loop Electronics ("DLE") infrastructure) by the applicable SBC owned Incumbent Local Exchange Carrier ("ILEC") and Competitive Local Exchange Carrier ("CLEC").

1.2. This Appendix outlines a wholesale service ("Broadband Service") that consists of three (3) network service arrangements that will be offered in order to provision xDSL service over the DLE infrastructure. Due to the nature of the technology being deployed with the DLE infrastructure project, these network service arrangements are integrated to one another and as such are not available under these terms and conditions as stand-alone network elementss, although CLEC may continue to obtain UNEs that otherwise are available (e.g. sub-loop copper and dark fiber). In addition to this Appendix, CLEC, must have negotiated an Appendix DSL to be included in its Interconnection Agreement with the SBC ILEC.

1.3. SBC Communications Inc. (SBC) means the holding company which owns the following ILECs: Illinois Bell Telephone Company, Indiana Bell Telephone Company Incorporated, Michigan Bell Telephone Company, Nevada Bell Telephone Company, The Ohio Bell Telephone Company, Pacific Bell Telephone Company, The Southern New England Telephone Company, Southwestern Bell Telephone Company and/or Wisconsin Bell, Inc. d/b/a Ameritech Wisconsin.

1.4. As used herein, **SBC-12STATE** means the above listed ILECs doing business in Arkansas, California, Illinois, Indiana, Kansas, Michigan, Missouri, Nevada, Ohio, Oklahoma, Texas and Wisconsin.

1.5. As used herein, **SNET** means the applicable above listed ILEC doing business in Connecticut.

1.6. The prices at which **SBC-12STATE** agrees to provide CLEC with Broadband Service are contained in the Attachment 1 to this appendix and/or applicable Commissioned ordered tariff as specified below.

1.7. For CLECs operating in Connecticut, **SNET**'s Broadband Service offering may be found in the Commission ordered Connecticut Access Service Tariff to be filed. A similar tariffed offering is expected to be filed in Ohio as well.

1.8. The term ILEC in this Appendix references the SBC ILECs doing business in the regions, as more particularly described below.

2.0 DESCRIPTION OF INFRASTRUCTURE

2.1. The DLE environment is defined by the Broadband Infrastructure currently being deployed by SBC-12STATE. SBC-12STATE is deploying the following network service arrangements in its respective networks: a Remote Terminal ("RT") site equipped with NGDLC RT equipment; RT Derived xDSL Capable 2-wire loops; Dedicated fiber strands from the RT site to the central office specific to voice and data; an NGDLC Central Office Terminal ("COT") Device for the

transport of the voice signal from the RT site to be delivered to the SBC-12STATE Class 5 Digital Switch and/or appropriate CLEC point of collocation in such instance as the CLEC desires to provide both voice and data to the end user subscriber; and ATM capacity that will act as an Optical Concentration Device ("OCD") for the routing of packet signals from the dedicated data fiber strand to a CLEC leased port on the OCD.

2.2. NGDLC will be installed in RT sites to effectively shorten copper loops for DSL to less than 12 Kilofeet ("Kft"). The loops from these RT sites will be referred to as RT derived DSL capable sub-loops and are defined as the copper facility from the RT site, through the Subscriber Access Interface ("SAI") to the end user premise. These loops will consist of copper feeder cable from the RT site to the SAI and distribution cable from the SAI to the end user premises. The feeder cable will consist of an integrated (hard-wired) copper facility from the NGDLC equipment in the RT site to the SAI. A cross-connect will be made in the SAI to connect a 2-wire distribution copper loop associated with an end user's line to the appropriate feeder copper facility. This cross-connect will serve to move the end-users line onto the NGDLC equipment deployed in the RT site. After placing the end user line onto the NGDLC equipment, the copper loop length will effectively be shortened to the length of the copper feeder to the SAI and the copper distribution from the SAI to the end user. This will serve to make an end user's line xDSL capable.

2.3. A combination (voice and data) card will be placed in the NGDLC equipment in the RT site. At this time the only card available with the NGDLC being deployed by SBC-12STATE is the ADSL Distribution Line Unit ("ADLU"). The ADLU card is an ADSL service card, providing the same specifications as current ADSL service. This card splits the voice and data signal. Then, the card, along with the rest of the NGDLC hardware and software, packetizes the ADSL data bit stream and provides ATM data transport to the central office. A virtual cross-connect will be established to route the data signal from a specific end user's line to the dedicated OC-3c for data in order to transport that signal to the serving wire center ("SWC").

2.4 The ADLU card is specific to the provision of an ADSL service within the technical specifications outlined by the vendor. CLEC will be permitted to build a profile of values associated with an end user service provided over the ADLU card as outlined in the section of this Appendix entitled CLEC PROFILE. CLEC agrees to develop service profiles that are compatible with the ADLU card as determined by the vendor and SBC-12STATE Technical Publications to be provided. Should Alcatel or any other vendor develop a card compatible with the NGDLC deployed by SBC-12STATE, CLEC may request SBC-12STATE to develop an additional network service arrangement to be provided as part of the Broadband Service outlined herein to accommodate other types, vintages, or suppliers of xDSL capable cards. SBC reserves the right to accept or reject such request. All terms, conditions and rates for any additional service to be offered as part of this Appendix will be negotiated by the Parties to this Agreement.

2.4. From the RT site, OC-3s will be utilized to transport voice and data from the RT site to the Central Office on a non-protected fiber. A distinct concatenated OC-3 (OC-3c) will be provided for the data portion of the path and a distinct OC-3 will be provided for the voice path. In the central office, the incoming data OC-3c terminates on the Fiber Distribution Frame ("FDF") and will be delivered to an OCD. The OCD aggregates OC-3cs from multiple RT sites and routes the traffic to the appropriate CLEC outbound OC-3c or DS3 port leased on the OCD. The voice OC-3 also terminates on the FDF and will be delivered to the NGDLC COT equipment residing in the Central Office. From the COT the voice path is extended at the DS0 speed directly to the Main Distribution Frame ("MDF") in a like manner to existing 2-wire

UNE loops provisioned over DLC and extended either to the **SBC-12STATE** voice switch or to a CLEC point of virtual or physical collocation.

2.5. Deployment of this infrastructure will occur in multiple, overlapping phases over three (3) years. New and existing RT sites will be utilized in conjunction with the Broadband Infrastructure project. **SBC-12STATE** will provide to CLECs information regarding the deployment of this technology through network disclosures and also via the Internet.

3.0 DEFINITIONS

3.1. The term Digital Loop Electronics ("DLE") describes a specific outside plant loop network infrastructure that is described in detail above. Such term, for purposes of this Appendix will be utilized interchangeably with the term NGDLC.

3.2. An RT site for purposes of this Appendix is defined as either a Controlled Environmental Vault ("CEV"); Hut; and/or Cabinet equipped with SBC-12STATE NGDLC RT equipment deployed specifically for the purposes of providing ADSL service to an end user. Additional vendor applications may be deployed within the SBC-12STATE network as described in 2.4 above, or at the discretion of SBC-12STATE. CLEC will be notified of any such future deployment via network disclosure.

3.3 A Serving Wire Center ("SWC") for purposes of this Appendix is defined as an end office equipped with the network service arrangements described above in Section 2.

3.3. The term xDSL describes various technologies and services. **SBC-12STATE**'s Broadband Service offering is set forth below for CLECs to use in conjunction with providing xDSL to their end-users over NGDLC.

3.4. As addressed in section 2.4 above, any service established under the terms of this Appendix must be compatible with the **SBC-12STATE** NGDLC RT equipment deployed in the RT site and with any **SBC-12STATE** NGDLC COT equipment deployed in the SWC.

3.5. Pre-Order Loop qualification will be recommended in conjunction with this application as described in Appendix DSL to this Agreement. Pre-Order loop qualification is discussed further in the provisioning and installation section of this Appendix.

3.6. The network service arrangements necessary for a CLEC to provision a DSL service in the DLE environment will be offered in three scenarios:

3.6.1. Line Shared Network Service Arrangements
3.6.2. Non-Line Shared Data Only Network Service Arrangements
3.6.3. Voice and Data Network Service Arrangements

4.0 LINE SHARED SERVICE ARRANGEMENTS

4.1. The following network service arrangements will be necessary in order for CLEC to provision a DSL service in the DLE environment under line sharing: a high frequency portion of the sub-loop ("HFPSL") from the SAI to the customer premises; a DLE-ADSL feeder extending from the OCD in the central office to the SAI, including the NGDLC equipment in the RT site and the feeder copper from the RT site to the SAI; and a port on the OCD.

4.2. Additional cross-connects will be required. A DLE-SAI Cross-Connect will be required in the SAI in the field to connect feeder cable from the NGDLC equipment in the RT site to the distribution cable serving the individual end user. Also, an OCD cross connect to either a virtual or physical point of Collocation in the SWC will be required to extend the OCD port.

4.3. From the CLEC point of Collocation, CLEC may purchase the existing set of transport products as described in Appendix: UNE or from the applicable commission-ordered access service tariff for the purposes of transporting the data signal from the OCD to the appropriate CLEC ATM network.

5.0 NON-LINE SHARED NETWORK SERVICE ARRANGEMENT

5.1. In the non-line shared environment, the same set of network service arrangements and associated cross-connects described above in Section 4.1 for the line shared environment will be utilized by CLEC with one exception. The DLE-xDSL HFPSL will be substituted with a data only DLE-xDSL Sub-loop. This sub-loop is the physical copper loop from the SAI site to the NID at the customer premise.

6.0 VOICE AND DATA NETWORK SERVICE ARRANGEMENTS

6.1. In such instance as CLEC desires to provision both voice and data over the same copper facility, **SBC-12STATE** will provide this capability to CLEC. This Broadband Service will be offered only in such instance as CLEC will provide both the voice and data portions of the loop. **SBC-12STATE** will not offer the capability for CLEC or provide any arrangement for a third party to this agreement to share the voice and/or data portion of the loop.

6.2. Due to the nature of the Broadband Infrastructure being deployed within the **SBC-12STATE** network, voice and data traffic from a common copper facility will be split in the NGDLC equipment deployed at the RT site into two distinct paths: one for voice and another for data. Therefore, SBC will provide CLECs with two distinct interconnection points at their point of virtual or physical collocation in the central office for voice and data traffic respectively.

6.3. **SBC-12STATE** will provision such Broadband Service by permitting CLEC to establish an underlying 2-wire voice loop over NGDLC. This underlying loop will be delivered from the NGDLC COT to the MDF at the DS0 level. From the MDF this voice loop will be extended to the Intermediate Distribution Frame ("IDF") and/or CLEC collocation in a manner similar to existing unbundled loops.

6.4. **SBC-12STATE** will provision the data portion of this Broadband Service in the same manner as the Line Shared network service arrangements addressed in Section 4.0 of this Appendix. As addressed in Section 4.0 of this Appendix, data traffic will be provided over the High Frequency Portion of the Sub-Loop as described in Section 8.0 of this Appendix; the ADSL Feeder Network service arrangement provisioned from the SAI site to the OCD as described in Section 9.0 of this Appendix; through the CLEC OCD port termination extended to CLEC collocation as addressed in Section 10 of this Appendix.

6.5. **SBC-12STATE** is identifying and developing the network service arrangements and associated processes to make the 2-wire underlying voice loop network service arrangement and associated interconnection point available to CLECs. **SBC-12STATE** will notice CLEC of these new network service arrangements, associated processes and pricing via Accessible Letter. Such service arrangements will be offered in addition to those outlined in this Appendix and will be provided via an Amendment to this Appendix.

7.0 DLE-xDSL HFPSL

7.1. This sub-loop is defined as the copper distribution portion of the loop beginning at the SAI and extending to the end user premise.

7.2. CLEC will be required to purchase the HFPSL (high frequency spectrum portion of the sub-loop) in a line-shared environment. The high frequency spectrum will be allocated over the DLE-xDSL sub-loop or DLE-xDSL HFPSL network service arrangement; and the DLE-ADSL Feeder network service arrangement (on a per-ADLU-card-port basis). The OC-3c will be integrated to the NGDLC equipment in the RT site. In addition to the HFPSL, CLEC must purchase the DLE-SAI Cross Connect in the SAI as described above.

7.3. For purposes of the HFPSL, this sub-loop will be a line-shared loop only. CLEC will lease the HFPSL to provide DSL data services over the shared copper facility. The voice portion of this loop will belong to **SBC-12STATE**. This option will not be available to CLEC where the retail voice (POTS) service is provided by any carrier other than **SBC-12STATE**, including those situations where the voice service is provided by any other carrier on a resale or leased basis (e.g., UNE Platform) from **SBC-12STATE**.

7.4. The OCD Port Termination and OCD Cross-Connect to collocation must be in place five (5) business days prior to CLEC's placing of DLE-xDSL HFPSL, DLE-xDSL sub-loop or DLE-ADSL Feeder orders.

7.5. The existing loop qualification process outlined in Appendix DSL will be recommended in conjunction with the DLE-xDSL sub-loop; provided, however, a design layout record will not be offered in conjunction with this service offering. Also, the service performance, maintenance and provisioning and installation intervals for a 2-wire xDSL capable loop over which xDSL may be provisioned as outlined in Appendix DSL will apply to this offering.

8.0 DLE-xDSL SUB-LOOP (DATA ONLY)

8.1. When the CLEC desires to provide a dedicated data only facility from the RT site to the end user premise under the DLE infrastructure, CLEC will be required to purchase the DLE-xDSL Sub-Loop. This network service arrangement is identical to the DLE-xDSL HFPSL network service arrangement described above and will be provided under the same terms and conditions as outlined above with the exception that the DLE-xDSL Sub-Loop will consist of the sub-loop from the SAI to the end user NID, not simply the high frequency portion of the sub-loop.

8.2. This network service arrangement will be provided only in conjunction with the DLE infrastructure for use with data only sub-loops in the non-line-shared environment.

9.0 DLE-ADSL FEEDER

9.1. The DLE-ADSL Feeder network service arrangement will be necessary to transmit the DSL data side of the loop to the OCD in the central office. This network service arrangement will be required in addition to the DLE-xDSL HFPSL or DLE-xDSL Sub-Loop, and the OCD Port Termination.

9.2. This product will consist of the copper feeder from the SAI to a port on the ADLU card in the NGDLC RT equipment and a virtual cross-connect from such port through the NGDLC RT

equipment to the OC-3c transport fiber from the NGDLC RT equipment to the SWC FDF and will be delivered to the OCD.

9.3. Only the ADSL feeder network service arrangement is available at this time due to the type of card initially available for deployment with this infrastructure. The availability of different versions of this network service arrangement (e.g., for different types of xDSL technology) are subject to Sections 2.3-2.4 above.

9.4. The data OC-3c will transport packets of information from all end users' DSL services provisioned for all CLECs through the NGDLC equipment deployed in the RT site.

9.5. A permanent virtual circuit (PVC) must be configured over this OC-3c fiber facility to support CLEC's DSL service. The PVC consists of virtual cross-connects established at both the NGDLC equipment in the RT site and in the OCD device deployed in the SWC.

9.6. A PVC will be made available to CLEC for the establishment of its DSL service. One PVC per end user will made available to CLEC per end user service. Unspecified Bit Rate (UBR) PVCs will be the only type of PVC made available with this offering at this time. The PVC will be established using the process as outlined in the provisioning section of this Appendix. A Permanent Virtual Path ("PVP") is not being offered in conjunction with this offering at this time. Additionally, CLEC is restricted to the provision of DMT service over the ADLU card.

9.7. The maximum number of PVCs that can be provisioned over the DLE-ADSL Feeder is dependant upon the form of OCD Port Termination (as described below) purchased in the central office and upon upstream and downstream bandwidth and other factors allocated per PVC in the CLEC Profile. CLEC will be responsible for ensuring there is sufficient capacity on its leased OCD ports (DS3 or OC-3c) to support CLEC's provided xDSL service over this infrastructure.

9.8. In such instance as CLEC traffic exceeds thresholds for port capacity published in SBC Technical Publications or adversely impacts common traffic across the OC-3c data transport facility, **SBC-12STATE** reserves the right to notify CLEC and require CLEC to purchase additional ports or capacity where available before accepting orders for any additional PVCs.

9.9. PVCs are configured in advance by ATM service providers between the CLEC end user customer and a single service provider. Under the terms of this Agreement, CLEC represents the single service provider. CLEC is responsible for providing the information necessary for **SBC-12STATE** to provision the PVC in the **SBC-12STATE** NGDLC equipment in the RT site and in the OCD in the SWC. This information must be provided by the CLEC to **SBC-12STATE** pursuant to the CLEC Information Form (CLIF) process outlined in the CLEC Handbook.

9.10. **SBC-12STATE** will be responsible for network monitoring of the use of the common OC-3c between the central office and the RT site. In the provisioning of the PVC, CLECs will be restricted to upstream and downstream bandwidth, aggregate power and noise setting compatible with the card vintage deployed in the NGDLC equipment as addressed in Sections 2.4 and 3.5 above. **SBC-12STATE** will require from CLECs a forecast of expected traffic through each shared OC-3c network service arrangement over which CLEC establishes a PVC. The CLEC forecast process for DLE will be outlined within the CLEC Handbook.

9.11. Initially, **SBC-12STATE** will not allocate this DLE-ADSL Feeder by bandwidth, but reserves the right to modify this Appendix based upon terms and conditions agreed to by both Parties in

order to do so, dependent upon traffic concerns over the shared OC-3c data facility should the amount of cumulative traffic over this shared facility from all ADSL providers exceed a threshold of 75% of the maximum capacity of the OC-3c bandwidth available for ADSL traffic. Should the Parties be unable to reach agreement on modified terms and conditions within sixty (60) days of the initial written notice from **SBC-12STATE**, either Party may request resolution of any remaining issues by the appropriate state Commission under the dispute resolution procedures set forth in this Agreement.

10.0 OCD PORT TERMINATION

10.1. The incoming dedicated OC-3c for data will terminate in the OCD. An OCD will be placed in each SWC where this product is made available. CLEC will be required to purchase a port termination on the OCD. The OCD Port Termination will consist of a DS3 or OC-3c port on the OCD.

10.2. In addition to the OCD Port Termination, CLEC must purchase a physical OCD cross-connect. This cross-connect is a physical appearance on the FDF that will allow for the OCD Port Termination to be extended to CLEC's physical or virtual point of collocation. The OCD Cross Connect will be provided at the OC-3c and DS3 levels only.

11.0 PROVISIONING AND INSTALLATION

11.1. Provisioning and installation of these network service arrangements should be considered on two distinct separate orders: CLEC infrastructure orders and end user specific orders. CLEC will be required to build the necessary network infrastructure to support its DSL service in the NGDLC environment five (5) business days prior to placing end user orders for the DLE-xDSL HFPSL, DLE-xDSL Sub-Loop or DLE-ADSL Feeder network service arrangements. The necessary network service arrangements for infrastructure are the OCD Port Termination and associated cross-connects. The OCD Port Termination will be issued via one (1) Access Service Request (ASR). End user specific orders consist of either the DLE-xDSL HFPSL or the DLE-xDSL Sub-Loop and the DLE-ADSL Feeder. These network service arrangements will be issued utilizing a Local Service Request (LSR).

11.2. In conjunction with each ASR submitted, CLEC must also submit a CIF indicating virtual parameters that must be established in conjunction with the OCD. These parameters include the following: Customer Address (Point of Presence ("POP") Location); Connection Speed (OC3c or DS3); Connection Type (UNI DCE, UNI DTE or NNI); and Number of Connections.

11.3. Additional instructions on the order flow, including intervals, for the associated network service arrangements provided in this Appendix can be found in the CLEC Handbook.

12.0 CLEC PROFILE

12.1. Prior to submitting end user orders, the CLEC must establish a Profile in the SOLID provisioning interface. The SOLID provisioning interface will serve as an interface permitting CLECs to establish values through an Internet based Graphical User Interface ("GUI") associated with their end user's service in the Network Management System ("NMS") controlling both the OCD and the NGDLC equipment in the RT site. CLECs will establish a profile that consists of several distinct combinations of several factors including Upstream and Downstream Bandwidth; Aggregate Power; and Noise. CLECs will be allowed via this GUI to establish a profile driven by CLEC AECN that consists of different combinations of these

factors. These factors could be established to mirror the various PSD Mask services offered in conjunction with DSL service today, or could serve as new combinations of speed, bandwidth and power from existing PSD Masks. However, only combinations compatible with the NGDLC equipment deployed by **SBC-12STATE** will be available. Thus, integer values in SOLID will be limited by the capabilities of the NGDLC equipment deployed in the **SBC-12STATE** network. As such, the current compatible specifications are limited by the capability of the ADLU line card.

12.2. An initial SOLID Profile must be built by CLEC five (5) business days prior to issuing any LSRs associated with this product offering. The CLEC Profile will only have to be built once and will encompass the entire **SBC-12STATE** region. Changes can be made to the CLEC Profile at the discretion of CLEC. However, previously established end user services will not be impacted by such alteration unless CLEC initiates a disconnect of the existing xDSL service and a new connect of the service under the new Profile parameters.

12.3. Additional instructions in relation to SOLID, the CIF form and provisioning flows for this product can be found in the CLEC Handbook.

13.0 LOOP QUALIFICATION

13.1. Loop qualification will be recommended in conjunction with this offering. The recommended approach will be that CLEC will perform a pre-order loop qualification on an end user's loop in order to determine if the loop is xDSL capable. In such instance that the loop length is too long and the DLE infrastructure is available to provide xDSL service, a RT site identification will be indicated on the loop qualification. This will serve as the triggering event to notify CLEC that the DLE infrastructure is available to provide DSL services.

13.2. Should CLEC elect to not perform pre-order loop qualification and issues an order for the network service arrangements as described herein, **SBC-12STATE** will perform a loop qualification internally. Should such internal loop qualification indicate that an RT site is not available for that end user's loop or that the existing copper facility is xDSL capable with or without loop conditioning, **SBC-12STATE** will reject such order.

13.3. Regardless of whether CLEC has performed the loop qualification or **SBC-12STATE** has internally performed loop qualification, CLEC will be charged the standard loop qualification charge as outlined in Appendix DSL.

14.0 LOOP CONDITIONING

14.1. Loop conditioning may be necessary in such instance as the distribution copper portion of the loop from the RT site to the end user (including the copper feeder to the SAI) does not comply with existing standards, but will only be performed by **SBC-12STATE** when requested by CLEC. In such instance as Loop Conditioning is requested by CLEC for a loop provided for in conjunction with this service offering, associated rates, terms and conditions for loop conditioning outlined in Appendix DSL will apply.

15.0 RATE STRUCTURE

15.1. Rates for the Broadband Service offerings described herein are set forth in Attachment A to this Appendix.

15.2. DLE-xDSL HFPSL, DLE-xDSL SUB-LOOP & DLE-ADSL FEEDER

CLECs will be charged both a monthly recurring charge and non-recurring initial and additional charge for each of these network service arrangements. Charges for these network service arrangements will be based upon state-wide average pricing.

15.3. OCD PORT TERMINATION

CLECs will be charged both a monthly recurring charge and non-recurring initial and additional charges for this network service arrangement. The OCD port termination will be offered at both the DS3 and OC-3 speeds.

In addition to the OCD Port Termination, the OCD Cross-Connect network service arrangement will be necessary from the OCD Port Termination to either virtual or physical CLEC collocation. CLECs will be charged both a monthly recurring and non-recurring rate for the OCD Cross-Connect. The cross-connect will be offered at two speeds: OC-3 and DS3.

15.4. LOOP QUALIFICATION & CONDITIONING

A loop qualification charge will apply in conjunction with this offering. Additionally, in such instance as loop conditioning is requested by CLEC with this offering, CLEC will be charged the same rates for loop conditioning as outlined in Appendix: DSL.

16.0 RESERVATION OF RIGHTS

16.1. The parties acknowledge that the terms and conditions for the Broadband Service offerings set forth above are specific to the DLE infrastructure. Except where otherwise specified, such terms and conditions may not be applied to any other Appendix to this Agreement.

16.2. The Parties acknowledge and agree that implementation of this new Broadband Wholesale Service being introduced as part of Project Pronto is expressly contingent upon satisfactory resolution of regulatory issues, including but not limited to resolution of certain asset ownership issues relating to the SBC-Ameritech Merger Conditions that are currently pending before the Federal Communications Commission ("FCC"). Thus, the Parties agree that they will not commence operations under the rates, terms and conditions set forth in this Appendix until such time as the asset ownership issues pending before the FCC are fully resolved. This Broadband Wholesale Service, including the rates, terms and conditions set forth herein, is subject to change, modification and/or withdrawal by the SBC ILEC(s), in its sole discretion, in whole or in part, as a result of regulatory developments ("Regulatory Developments"), including but not limited to action or inaction on the ownership issues pending before the FCC or SBC decides that the assets in question will be owned by an entity other than the SBC ILEC(s). In the event that the SBC ILEC(s) changes or modifies this Service as a result of Regulatory Developments, the Parties shall immediately negotiate rates, terms and conditions to conform this Appendix to be consistent with such changes or modifications. In such event, the Parties agree that the SBC ILEC(s) shall have no obligation to provision its Broadband Service under the rates, terms and conditions currently set forth herein. In the event that the SBC ILEC(s) withdraws this Service as a result of Regulatory Developments, the Parties acknowledge and agree that the SBC ILEC(s) shall have no obligation to provision such Service under the rates, terms and conditions set forth herein.

16.3. The Parties acknowledge and agree that the provision of the network service arrangements and/or services set forth above and the associated rates, terms and conditions set forth in this

Appendix are subject to any legal or equitable rights of review and remedies (including agency reconsideration and court review). Any reconsideration, agency order, appeal, court order or opinion, stay, injunction or other action by any state or federal regulatory body or court of competent jurisdiction which stays, modifies, or otherwise affects any of the rates, terms and conditions herein, specifically including those arising with respect to Federal Communications Commission orders (whether from the Memorandum Opinion and Order, and Notice of Proposed Rulemaking, FCC 98-188 (rel. August 7, 1998), in CC Docket No. 98-147, the FCC's First Report and Order and Further Notice of Proposed Rulemaking, FCC 99-48 (rel. March 31, 1999), in CC docket 98-147, the FCC's Third Report and Order and Fourth Further Notice of Proposed Rulemaking in CC Docket No. 96-96 (FCC 99-238), including the FCC's Supplemental Order issued *In the Matter of the Local Competition Provisions of the Telecommunications Act of 1996*, in CC Docket No. 96-98 (FCC 99-370) (rel. November 24, 1999), or the FCC's Third Report and Order in CC Docket No. 98-147 and Fourth Report and Order in CC Docket No. 96-98 (rel. December 9, 1999), or any other proceeding, the Parties shall expend diligent efforts to arrive at an agreement on conforming modifications to this Agreement. If negotiations fail, disputes between the Parties concerning the interpretation of the actions required or the provisions affected shall be handled under the dispute resolution procedures set forth in this Agreement.

17.0 APPLICABILITY OF OTHER RATES, TERMS AND CONDITIONS

17.1. Every interconnection and network service arrangement provided hereunder, shall be subject to all rates, terms and conditions contained in this Agreement which are legitimately related to such interconnection, service or network service arrangement. Without limiting the general applicability of the foregoing, the following terms and conditions of the General Terms and Conditions are specifically agreed by the Parties to be legitimately related to, and to be applicable to, each interconnection, service and network service arrangement provided hereunder: definitions, interpretation, construction and severability; notice of changes; general responsibilities of the Parties; effective date, term and termination; fraud; deposits; billing and payment of charges; non-payment and procedures for disconnection; dispute resolution; audits; disclaimer of representations and warranties; limitation of liability; indemnification; remedies; intellectual property; publicity and use of trademarks or service marks; no license; confidentiality; intervening law; governing law; regulatory approval; changes in End User local exchange service provider selection; compliance and certification; law enforcement; no third party beneficiaries; disclaimer of agency; relationship of the Parties/independent contractor; subcontracting; assignment; responsibility for environmental contamination; force majeure; taxes; non-waiver; network maintenance and management; signaling; transmission of traffic to third parties; customer inquiries; expenses; conflicts of interest; survival; scope of agreement; amendments and modifications; and entire agreement.

ATTACHMENT 1A: BROADBAND SERVICE PROPOSED RATES - SWBT

	Arkansas			Kansas			Missouri		
	Recurring	Non-Recurring		Recurring	Non-Recurring		Recurring	Non-Recurring	
	Monthly	First	Additional	Monthly	First	Additional	Monthly	First	Additional
1.) DLE-DSL HFPSL (LINE SHARED)	$9.36	N/A	N/A	$3.70	N/A	N/A	$9.33	N/A	N/A
1A.) DLE-DSL Sub-Loop (DATA ONLY)	$18.73	$11.94	$3.86	$7.39	$11.62	$3.75	$18.66	$18.36	$5.93
2.) DLE-DSL Feeder	$8.67	N/A	N/A	$9.83	N/A	N/A	$10.24	N/A	N/A
3.) OCD Port Termination									
3A.) OC3c Port	$177.40	$160.76	$134.83	$189.60	$192.31	$161.29	$201.00	$259.89	$217.97
3B.) DS3 Port	$96.56	$186.69	$160.76	$105.95	$223.33	$192.31	$111.47	$301.81	$259.89
4.) OCD Crossconnect to Collocation									
4A.) OC3c CC	$2.16	$137.63	$96.32	$3.07	$147.21	$114.54	$3.02	$194.96	$154.16
4B.) DS3 CC	$18.08	$170.68	$106.87	$25.64	$143.08	$100.07	$25.24	$153.36	$109.14
5.) DLE-SAI Crossconnect	N/A	$85.57	$29.38	N/A	$102.37	$35.16	N/A	$141.76	$48.68

	Oklahoma			Texas		
	Recurring	Non-Recurring		Recurring	Non-Recurring	
	Monthly	First	Additional	Monthly	First	Additional
1.) DLE-DSL HFPSL (LINE SHARED)	$9.86	N/A	N/A	$4.84	N/A	N/A
1A.) DLE-DSL Sub-Loop (DATA ONLY)	$19.73	$16.73	$5.40	$9.68	$11.75	$3.80
2.) DLE-DSL Feeder	$13.59	N/A	N/A	$7.61	N/A	N/A
3.) OCD Port Termination						
3A.) OC3c Port	$278.44	$250.99	$210.51	$143.12	$155.84	$130.70
3B.) DS3 Port	$153.13	$291.47	$250.99	$79.93	$180.97	$155.84
4.) OCD Crossconnect to Collocation						
4A.) OC3c CC	$3.83	$194.89	$149.82	$2.30	$118.82	$93.35
4B.) DS3 CC	$32.00	$157.84	$108.98	$19.24	$115.45	$81.61
5.) DLE-SAI Crossconnect	N/A	$142.93	$49.08	N/A	$82.95	$28.49

NOTE: Implementation of the new Broadband Wholesale Service being introduced as part of Project Pronto is expressly contingent upon resolution of regulatory and Merger Conditions issues pending before the Federal Communications Commission ("FCC"). The Broadband Wholesale Service, including rates, terms and conditions, is subject to change, modification or withdrawal by the SBC ILECs, in their sole discretion, in whole or in part, either before or after the service becomes operational as a result of the matters now pending before the FCC.

ATTACHMENT 2:

SBC BROADBAND SERVICE: CLEC OVERVIEW

(RELEASE 1.0)

NOTE: Implementation of the new Broadband Wholesale Service being introduced as part of Project Pronto is expressly contingent upon resolution of regulatory and Merger Conditions issues pending before the Federal Communications Commission ("FCC"). The Broadband Wholesale Service, including rates, terms and conditions, is subject to change, modification or withdrawal by the SBC ILECs, in their sole discretion, in whole or in part, either before or after the service becomes operational as a result of the matters now pending before the FCC.

INTRODUCTION

In October of 1999, SBC announced its intention to deploy a new Broadband Network Infrastructure in order to expand the availability of DSL services to end users in its territories. This project is commonly referred to as "Project Pronto." The SBC ILECs in their territories will provide wholesale access to the underlying network installed as part of this project for use by its CLEC customers in order to provision end user xDSL service. The purpose of this document is to describe this offering and the various network service arrangements necessary to provision an xDSL service over the new Broadband Infrastructure being deployed by the SBC ILECs under the "Project Pronto."

SBC BROADBAND DEPLOYMENT

The Broadband Infrastructure Project is a portion of PROJECT PRONTO, which in combination with CO based DSLAM technology will make broadband services available to an estimated 77 million customers, or about 80 percent of end users in the SBC 13-state territory. Starting in 1999 and continuing over the next three years, SBC will invest more than $6 billion to extend the reach of full-rate DSL beyond 12Kft from the central office. The Broadband Infrastructure Project requires placement of at least five network service arrangements in the TELCO network: a Next Generation Digital Loop Carrier ("NGDLC") remote terminal ("RT"); RT derived DSL loops (using the NGDLC system); a NGDLC central office terminal ("COT"); and an Optical Concentration Device ("OCD").

Fiber-fed NGDLC RTs are being installed to effectively shorten copper loops for DSL to less than 12 Kft. Therefore, the only portion of the loop remaining sensitive to disturbers in the network is the distribution portion of the copper loop. The distribution copper extends from the customer premises to a Serving Area Interface ("SAI"). At the SAI a cross-connect will be placed to integrate the distribution copper to a copper feeder cable extending back from the SAI to the RT. This copper feeder cable is hardwired to the backplane of the NGDLC RT equipment. Within the NGDLC RT equipment, the data signal to and from the end user premises is delivered to a combination voice and data card. This card provides a splitter functionality to separate and combine these data and voice signals. Also, in conjunction with the rest of the NGDLC RT equipment, this card packetizes the data bit stream. The NGDLC system then transports both the voice and data signals on separate fibers to the central office. An OC-3 facility will be utilized to transport voice and a separate OC-3c facility will be utilized to transport the data. The data facility will be a non-protected fiber. The voice facility will be protected with redundant (but not diverse) fiber and electronics [??]. In the central office, the incoming data OC-3c will terminate on the fiber distribution frame ("FDF") and be delivered to an Optical Concentration Device ("OCD"). The OCD aggregates many incoming OC-3cs from multiple NGDLC RTs to a smaller number of outbound OC-3c or DS3 facilities. Additionally, the OCD routes packetized data traffic to the appropriate carrier's ATM network based upon packet routing addresses. The incoming voice OC-3 will also terminate on the FDF and be delivered to the NGDLC COT. The COT delivers the voice signals to either the SBC ILEC voice switch or to a CLEC's collocation to be extended to the CLEC's voice switch.

Currently the only card available for use with the NGDLC technology SBC is deploying is the ADSL Digital Line Unit ("ADLU") card. The ADLU card is a DSL service card. This card provides a portion of the DSLAM functionality in that it splits the voice and data signal and performs part of the data signal conversion. At this time, each ADLU card is capable of supporting two DSL end users (dual cards). In the future, quad cards will be released capable of supporting 4 end users per card. Additionally, cards supporting various other xDSL type services (such as SDSL, HDSL etc.) are expected to be developed in the future.

SBC WHOLESALE SERVICE

NOTE: Implementation of the new Broadband Wholesale Service being introduced as part of Project Pronto is expressly contingent upon resolution of regulatory and Merger Conditions issues pending before the Federal Communications Commission ("FCC"). The Broadband Wholesale Service, including rates, terms and conditions, is subject to change, modification or withdrawal by the SBC ILECs, in their sole discretion, in whole or in part, either before or after the service becomes operational as a result of the matters now pending before the FCC.

With the deployment of this infrastructure, SBC will be offering to the CLEC community a new wholesale service to provide CLECs the capability to utilize this infrastructure and establish a DSL service for an end user. SBC will provide this service in three basic configurations:

1. **Line Shared Data**
2. **Stand-Alone Data Only**
3. **Integrated Voice and Data**

LINE SHARED DATA

The first configuration CLECs will be provided is for situations in which a CLEC wishes to provide a DSL service to an end user over SBC's NGDLC infrastructure by using only the high frequency portion of a voice and data loop (i.e., the DSL portion of the loop). SBC will provide this product offering by provisioning the high frequency portion of the loop over the NGDLC and feeder/distribution copper. This will be accomplished by moving the existing copper loop from its current infrastructure into the NGDLC infrastructure by physically moving the distribution piece of the loop into the NGDLC feeder at the SAI. Because the voice portion of this loop is physically moved at the same time, the voice is also now carried by the NGDLC infrastructure. SBC will deliver the voice signal to its voice switch located in the central office via the NGDLC COT. The CLEC's data portion of the loop will be delivered through the OCD located in the central office to the appropriate CLEC point of collocation.

In the line shared data the network service arrangements provided to CLECs will consist of the following: the high-frequency portion of the copper sub-loop (HFPSL) from the remote terminal Digital Loop Carrier appearance over feeder and distribution copper facilities SAI to the end user demarcation point; an ADSL-DLE specific feeder loop from the central office to the SAI, including a port termination on an ADLU card placed in the NGDLC equipment; use of the OC-3c dedicated fiber from the NGDLC RT to the FDF and delivered to the OCD; and an OCD Port Termination . Two physical cross-connects will be necessary in this configuration. A copper cross-connect will be necessary in the SAI in the field, and a fiber OC-3c cross-connect or copper DS-3 cross-connect will be needed at the FDF or DSX, respectively, to extend the OCD port to the CLEC point of collocation.

The following is a numerical listing of the new network service arrangements currently being developed in conjunction with this offering in the Line Shared Environment:

1. **DLE-DSL HFPSL (High Frequency Portion of the Sub-Loop)**
2. **DLE-DSL Feeder**
3. **OCD Port Termination (OC-3 or DS3)**

The following is a listing of the cross-connects available in this configuration:

1. **DLE SAI Cross Connect**
2. **OCD Cross-Connect to Collocation**

DATA ONLY

The second configuration that will be offered to CLECs is for the situation in which the CLEC wishes to provision an entire facility dedicated strictly to DSL data service over NGDLC. In this configuration there is no voice signal provided over the copper portion of the loop. In the data only environment, the new network service arrangements will consist of the same network service arrangements listed above for the line sharing option. However, the copper component from the remote terminal to the end user will no

NOTE: Implementation of the new Broadband Wholesale Service being introduced as part of Project Pronto is expressly contingent upon resolution of regulatory and Merger Conditions issues pending before the Federal Communications Commission ("FCC"). The Broadband Wholesale Service, including rates, terms and conditions, is subject to change, modification or withdrawal by the SBC ILECs, in their sole discretion, in whole or in part, either before or after the service becomes operational as a result of the matters now pending before the FCC.

longer be line shared. In this instance, instead of purchasing the HFPSL, the CLEC will simply purchase the entire sub-loop from the SAI to the end user. Therefore an additional network service arrangement - dedicated sub-loop - will be made available to CLECs:

1. DLE-DSL Sub-Loop (DEDICATED DATA ONLY)

DIAGRAM 1: SBC WHOLESALE DATA SERVICES – LINE SHARED AND DATA ONLY

The following diagram illustrates the voice and data offerings addressed above. The incoming voice and data (or simply data in the case of a dedicated facility) is transmitted over the copper facility, through the NGDLC RT, to the port on the ADLU card. The ADLU card splits the voice and data signals – creating distinct paths for both voice and data. The line illustrated in blue represents the data portion of service from the ADLU card/port. The data is transmitted from the RT over the OC-3c dedicated fiber strand to the OCD in the serving wire center. From the OCD, incoming traffic from the multiple RTs associated with that OCD is routed to an outbound CLEC leased port delivered to CLEC collocation.

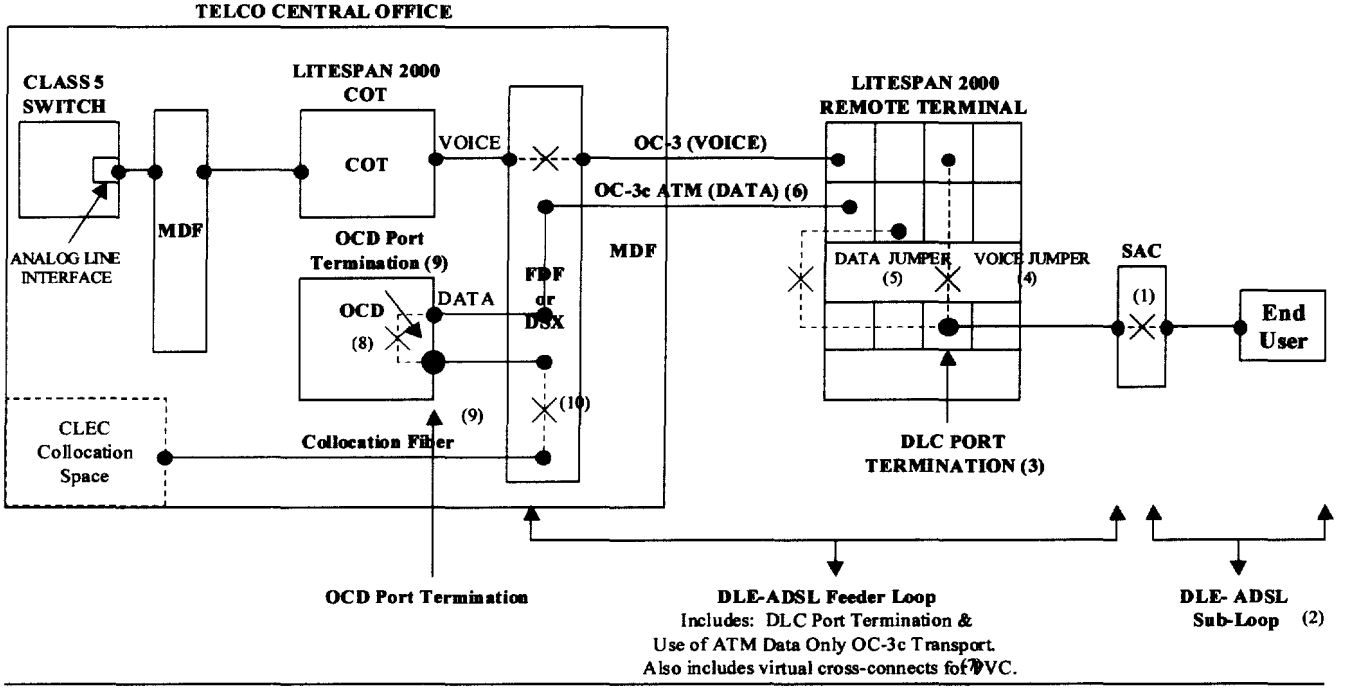

(1) DLE ADSL SAC Cross Connect
(2) **DLE-ADSL HFPSL**
(3) DLC Port Termination
(4) DLC Virtual Circuit - Voice
(5) DLC Virtual Circuit - Data
(6) OC-3c Dedicated for Data
(7) **DLE-ADSL Feeder**
(8) OCD Virtual Cross Connect
(9) **OCD Port Termination (OC-3 or DS3)**
(10) OCD Cross-Connect to Collocation (or UDT)

NOTE: Implementation of the new Broadband Wholesale Service being introduced as part of Project Pronto is expressly contingent upon resolution of regulatory and Merger Conditions issues pending before the Federal Communications Commission ("FCC"). The Broadband Wholesale Service, including rates, terms and conditions, is subject to change, modification or withdrawal by the SBC ILECs, in their sole discretion, in whole or in part, either before or after the service becomes operational as a result of the matters now pending before the FCC.

INTEGRATED VOICE AND DATA

The third configuration that will be offered will be an integrated voice and data offering. This configuration will offer CLECs the capability to provide both the data and voice portions of the loop over the new broadband infrastructure. This will be provided by offering CLECs the underlying voice loop served over NGDLC delivered directly to the SBC Main Distribution Frame ("MDF") at the DS0 speed. CLECs will therefore have the ability to pick up the voice portion of the loop at the MDF as they would with any other voice loop. The data portion of the loop would continue to be provisioned in a like manner to the line shared network service arrangements as addressed above. In this instance, the CLEC would be required to purchase the following network service arrangements:

1. NGDLC xDSL Loop (For Voice Only) (UNDER DEVELOPMENT – SUBJECT TO CHANGE)
2. DLE-DSL Feeder
3. OCD Port Termination (OC-3 or DS3)

The NGDLC xDSL loop network service arrangement is still under development within SBC and is the network service arrangement that would deliver the voice network service arrangement back to the CLECs. This network service arrangement will serve as a 2-wire voice loop delivered back to the MDF. The data portion of this loop must be added as high spectrum data. This is added by ordering the DLE-DSL feeder and OCD Port Termination network service arrangements.

DIAGRAM 2: INTEGRATED VOICE AND DATA

NOTE: Implementation of the new Broadband Wholesale Service being introduced as part of Project Pronto is expressly contingent upon resolution of regulatory and Merger Conditions issues pending before the Federal Communications Commission ("FCC"). The Broadband Wholesale Service, including rates, terms and conditions, is subject to change, modification or withdrawal by the SBC ILECs, in their sole discretion, in whole or in part, either before or after the service becomes operational as a result of the matters now pending before the FCC.

Diagram 2 illustrates SBC's integrated voice and data offering. In this scenario, SBC will provide CLECs an underlying voice loop terminating to the MDF and delivered to CLEC collocation in a manner similar to existing UNE 2-wire loops. Because the CLEC will have provisioned the underlying loop, in this scenario CLECs will not be required to purchase the HFPSL or sub-loop network service arrangements addressed above. SBC will provide CLECs the underlying loop and then subsequently add the data portion of the loop to provide the xDSL service. This will be accomplished by adding the DLE-ADSL Feeder network service arrangement to the OCD Port Termination to the underlying loop. The data side will continue to be delivered to the OCD in a like manner to that described above. The voice

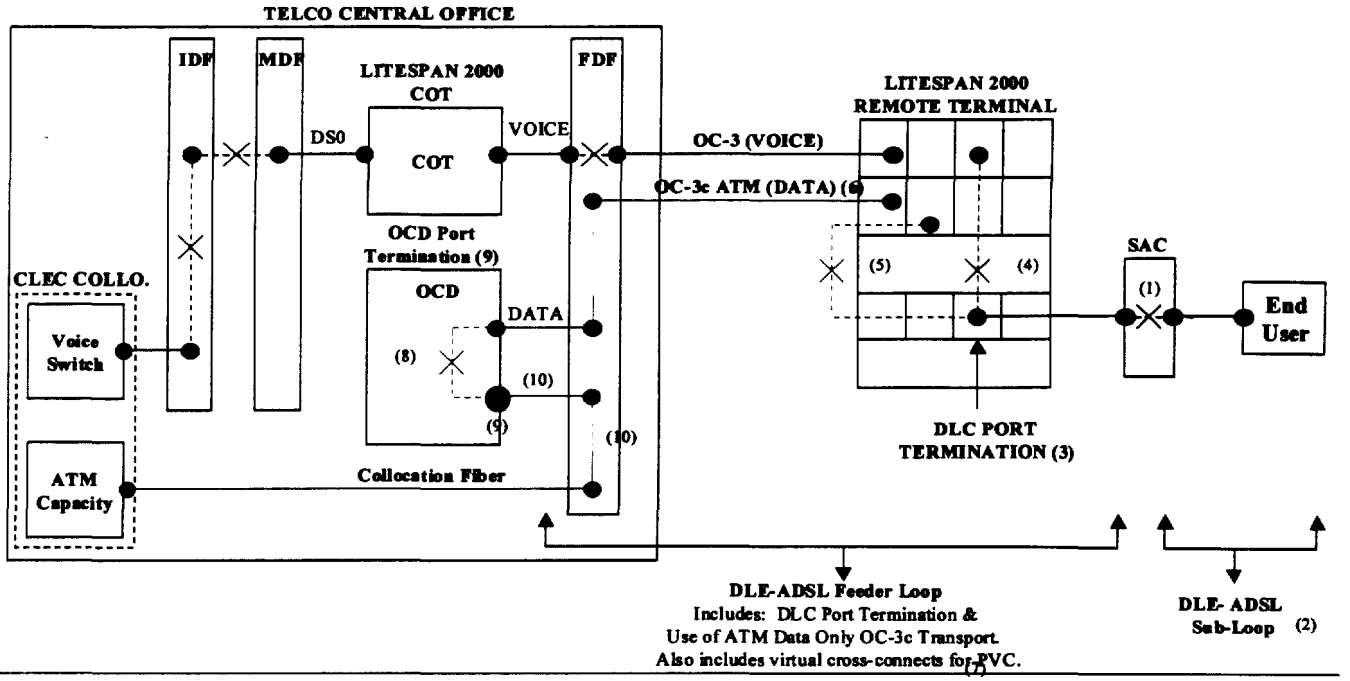

(1) DLE ADSL SAC Cross Connect
(2) **DLE-ADSL HFPSL**
(3) DLC Port Termination
(4) DLC Virtual Circuit - Voice
(5) DLC Virtual Circuit - Data
(6) OC-3c Dedicated for Data
(7) **DLE-ADSL Feeder**
(8) OCD Virtual Cross Connect
(9) **OCD Port Termination (OC-3 or DS3)**
(10) OCD Cross-Connect to Collocation (or UDT)

side will have a separate handoff point delivered to CLEC collocation.

LOOP QUALIFICATION

Loop qualification in this environment will still be recommended for CLECs. The existing loop qualification for current DSL services will be used. The loop information provided back to CLECs is expected to indicate to the CLEC if the loop is served out of an NGDLC RT, a non-DSL-capable DLC RT, or an all-copper loop out of a central office. This information will be necessary for the ordering of the network service arrangements from the central office to the end user. The CLEC is expected to perform loop qualification on an end user address that will return the indication that such TN or address is served out of NGDLC and at such time place an order for the associated NGDLC network service arrangements.

NOTE: Implementation of the new Broadband Wholesale Service being introduced as part of Project Pronto is expressly contingent upon resolution of regulatory and Merger Conditions issues pending before the Federal Communications Commission ("FCC"). The Broadband Wholesale Service, including rates, terms and conditions, is subject to change, modification or withdrawal by the SBC ILECs, in their sole discretion, in whole or in part, either before or after the service becomes operational as a result of the matters now pending before the FCC.

DSL TECHNOLOGIES SUPPORTED

At this time SBC is limited to offering only an ADSL form of service because the vendor of a majority of its NGDLC deployment has only developed an ADSL line card at this time. SBC has a strong incentive to consider the deployment of other versions or vintages of xDSL should a vendor develop additional line cards upon a CLEC request.

In relation to the ADSL service offered, the SOLID interface (see below) will allow CLECs the flexibility to build a large number of differentiated ADSL services at varying speeds within parameters established by SBC and the vendor. Using the SOLID system, CLECs will be able to place a new FID on the LSR submitted per end user xDSL order specifying a specific code set (a numerical value). Prior to placing that code set on an LSR, the CLEC must build profiles to associate with each value. When the LSR flows through TELCO systems, the SOLID system automatically provision the service corresponding to the code set illustrated on the order. CLECs will be capable of setting the following values (at a minimum) under this method:

DMT Upstream Minimum Rate	32 Kbps to 640 Kbps (increments of 32)
DMT Downstream Minimum Rate	640 Kbps to 8192 Kbps (increments of 32)
DMT Upstream Maximum Rate	32 Kbps to 640 Kbps (increments of 32)
DMT Downstream Maximum Rate	640 Kbps to 8192 Kbps (increments of 32)
DMT Upstream Minimum Noise	Integer Value: 0 to 31
DMT Upstream Target Noise	Integer Value: 0 to 31
DMT Upstream Max. Additional Noise	Integer Value: 0 to 31
DMT Upstream Max. Aggregate Power.	Integer Value: 0 to 20
DMT Upstream Max. Interleaved Channel Delay	Integer Value: 0 to 255
DMT Downstream Min. Noise	Integer Value: 0 to 31
DMT Downstream Target Noise	Integer Value: 0 to 31
DMT Downstream Max. Additional Noise	Integer Value: 0 to 31

As illustrated in the table above only DMT type xDSL services will be provided in conjunction with this offering.

DESCRIPTION OF NETWORK SERVICE ARRANGEMENTS:

The following section discusses in more detail the network service arrangements that will be offered in conjunction with the various configurations provided for under this offering. The network service arrangements can be sub-divided into two distinct categories. The first being those network service arrangements necessary for the CLEC to establish infrastructure to support DSL services in the NGDLC environment; and the second being the network service arrangements necessary to establish an end user DSL service in the NGDLC environment.

INFRASTRUCTURE NETWORK SERVICE ARRANGEMENT

The infrastructure necessary for the CLEC to provision DSL service must be in place prior to placing orders for end user service. The infrastructure network service arrangement below will be the required in either a line shared or data only configuration. The following are the infrastructure network service arrangement that must be established:

OCD Port Termination: (NEW)

As discussed, incoming packets of data belonging to a particular CLEC's end users will be aggregated and routed to the CLEC's port on the OCD. The CLEC will be required to purchase a port termination on the OCD device in the central office. The OCD port termination will be made available at two speeds,

OC-3c and DS3 speeds and will have an appearance on the FDF or DSX frame. From the FDF, the port will be extended to the CLEC's collocation site (via the OCD Cross Connect to Collocation).

END USER SPECIFIC NETWORK SERVICE ARRANGEMENTS

There are three end user specific network service arrangements necessary to provision a DSL service over the DLC infrastructure with a line shared or data only configuration. Those network service arrangements consist of either the DLE specific high frequency portion of the sub-loop (HFPSL); a DLE specific dedicated sub-loop; and the DLE feeder. These network service arrangements are described in detail in the following:

DLE-DSL HFPSL: (NEW)

The high frequency portion of the sub-loop from the SAI to the end user will be made available to CLECs. The HFPSL product will consist of the actual distribution copper sub-loops from the SAI to the NID at the end user's premises. In addition to this network service arrangement a cross-connect referred to as the DLE SAI Cross Connect will be necessary in the SAI box to cross connect the copper feeder loop from the RT site to the distribution copper sub-loop to the end user.

The new DLE-DSL HFPSL is defined as "the high frequency transmission path beginning at the SAI and extending to the standard Network Interface Device (NID) or demarcation point at the end user premises." The CLEC is responsible for providing the end user splitter at the customer premise. In all cases of line shared loops, the TELCO will be the voice provider. The CLEC will use the high frequency portion of the sub-loop (HFPSL) to provide DSL data services over the shared copper facility.

The infrastructure network service arrangement described above must also be in place for a period of 5 days prior to the provisioning of the HFPSL product. This particular version of line sharing will not be made available as part of any UNE Platform or UNE-P offering. The CLEC will issue an order by telephone number (TN) for the HFPSL product. This order will be reflected upon the initial service order issued by CLEC.

A CLEC may order this HFPSL using the standard ordering mechanisms in place, either via EDI or an LSR. A single order will be used for both of the end user specific products offered: the HFPSL and the DLE feeder network service arrangement. Standard provisioning intervals for an Unbundled 2-wire DSL loops will apply. These intervals will vary by region.

DLE-DSL Sub-Loop (DATA ONLY)

The entire sub-loop from the SAI to the end user will be made available to CLECs for application in the data only environment. The DLE-DSL SUB-LOOP product will consist of the same makeup as the HFPSL network service arrangement described above, however, this network service arrangement will consist of the entire copper sub-loop network service arrangement from the SAI to the end user demarcation point.

DLE-ADSL Feeder: (NEW)

The copper HFPSL or data only sub-loop will be cross-connected to the DLE-ADSL Feeder at the SAI in the field. An integrated 25-pair copper feeder cable connects the SAI to the NGDLC RT equipment. In the NGDLC equipment, the ADLU card and NGDLC RT equipment will split the voice from the data and transmit the data to the central office over a dedicated OC-3c facility. The OC-3c from the RT

NOTE: Implementation of the new Broadband Wholesale Service being introduced as part of Project Pronto is expressly contingent upon resolution of regulatory and Merger Conditions issues pending before the Federal Communications Commission ("FCC"). The Broadband Wholesale Service, including rates, terms and conditions, is subject to change, modification or withdrawal by the SBC ILECs, in their sole discretion, in whole or in part, either before or after the service becomes operational as a result of the matters now pending before the FCC.

terminates physically on the FDF and is then delivered to the OCD. A common network service arrangement referred to as the DLE-ADSL feeder will be offered to accommodate the use of the actual port on the ADLU card in the NGDLC equipment; the use of the dedicated fiber from the NGDLC RT to the central office; and for the use of the integrated cross-connect to the OCD. Pricing for this network service arrangement will be per Permanent Virtual Circuit (PVC). One PVC will be allocated per DLE-ADSL Feeder.

The data signals leaving the various ADLU cards placed in the Litespan equipment in the RT site will be transported to the central office over a common OC-3c dedicated facility for data. This facility transports data packets, once the data is split from the voice in the ADLU card, to the OCD. The OC-3c facility will be designed to take multiple packetized and multiplexed data signals outgoing from the NGDLC channel banks in an RT site, and then transport the signal to the OCD. The OC-3c transport will be designated for data traffic only. As described above, the OCD will provide a routing and aggregation functionality between the incoming OC-3cs to the central office and a dedicated CLEC port on the OCD extended to CLEC collocation.

A permanent virtual circuit (PVC) will be necessary from the Litespan equipment in the RT site through the OCD device (CBX-500) in the central office to the CLEC packet switch. A PVC is a locked up path from the Litespan to the OCD and ultimately to the CLEC ATM network. The PVC will consist of a virtual cross-connect placed in the Litespan; and an additional virtual cross-connect placed in the OCD. In addition to the virtual cross connects, the PVC will also consist of use of the OC-3c facility and fiber cross-connect between the Litespan equipment in the RT site and the OCD in the central office. The application of these virtual cross connects will be provided for in conjunction with this network service arrangement.

NGDLC xDSL 2-wire Loop (UNDER DEVELOPMENT – SUBJECT TO CHANGE)

This network service arrangement will equate to an underlying voice loop that will be provisioned over NGDLC. This loop will be delivered over NGDLC to the MDF in a similar manner to an existing unbundled loop. Once this network service arrangement is established, SBC will provide for CLECs to provision the DLE-ADSL feeder network service arrangement over this loop to terminate on a CLEC OCD port in the serving wire center. At that time, the CLEC will be delivered the data portion of the loop from the OCD to their point of collocation, and the CLEC will be delivered the voice portion of the loop to their point of collocation extended from the MDF (in the same manner as existing loops today). This will serve to provide the capability for an integrated voice and data provider to offer both the voice and data portions of a loop to an end user served over the NGDLC infrastructure. This network service arrangement is under development at this time and will be made available at a later date to be determined. Product specifications for this network service arrangement are subject to change.

HIGH LEVEL SERVICE ORDER FLOWS:

The following is an outline of the ordering and provisioning process within SBC for the establishment of the various applications discussed within this document. Ordering and provisioning of these network service arrangements will include Loop Qualification, an Infrastructure Service Order, and an End User Specific Service Order. At this time ordering specifications for the NGDLC xDSL loop network service arrangement have not been developed and as such are not addressed within this document.

1.) LOOP QUALIFICATION

The loop qualification process will be used to identify loops served out of the PRONTO infrastructure. A CLEC will perform a loop qualification using the customer address as they would for any DSL loop. If

NOTE: Implementation of the new Broadband Wholesale Service being introduced as part of Project Pronto is expressly contingent upon resolution of regulatory and Merger Conditions issues pending before the Federal Communications Commission ("FCC"). The Broadband Wholesale Service, including rates, terms and conditions, is subject to change, modification or withdrawal by the SBC ILECs, in their sole discretion, in whole or in part, either before or after the service becomes operational as a result of the matters now pending before the FCC.

the loop qualification is returned with an indicator representing greater than 17.5Kft in loop length, and if a PRONTO remote terminal is available to move the customer to in order to provide DSL services, that remote terminal site CLLI will appear at the bottom of the loop qualification response.

2.) INFRASTRUCTURE SERVICE ORDERS

OCD Port Termination

Service Order: ASR. An ASR will be used for this order to reflect infrastructure. This order MUST be placed prior to or in conjunction with the first order placed for a sub-loop, HFPSL or DLE-DSL Feeder related to the wire center where the OCD is located.

Network Service Arrangements to Be Included on Service Order: NC/NCI Code, USOC, Class Service, and CLEC Point of Collocation (Bay/Panel/Jack Information).

CLIF Form: CLEC will be required to submit a CLIF form for each OCD port it wishes to establish at the same time as the ASR is submitted. The CLIF form will have to be submitted once per ASR. The CIF form will contain the information necessary to establish the coordinates in the OCD to route traffic to the CLEC ATM network.

INFRASTRUCTURE SERVICE ORDER FLOW:

Network Service Arrangements: OCD Port Termination **and** OCD Cross-Connect to Collocation

Service Order: ASR.

Interval: Same as existing intervals for OC-3c and/or DS3 unbundled transport. These intervals are defined by region. Order must be completed five (5) Business Days prior to first order for end user network service arrangements outlined below.

Sample Order Flow: (See Diagram Below)

1. CLEC Issues ASR For OCD Port Termination and Cross-Connect.
2. A Location on ASR is CLEC Collocation Cage in the Serving Wire Center, Z Location is the OCD (CLEC will be able to obtain CLLI for the OCD from network disclosures related to PRONTO).
3. LSC Processes ASR. FOC back to CLEC is the Port Assignment on the OCD. ASR Flows Downstream to Network Organizations....
4. CLEC Submits CIF for the Port Assignment FOC'd to CLEC on ASR.
5. LSC Reviews CIF to Ensure All Fields Updated and Forwards CIF to NOC
6. NOC Establishes Logical Parameters in SOLID From CIF.

3.) END USER SPECIFIC ORDERS

DLE-DSL HFPSL & DLE-DSL FEEDER (LINE SHARED) OR DSL SUB-LOOP & DLE-DSL FEEDER (DATA ONLY)

Service Order: LSR. One LSR will be used for both of these items. A CRIS (non-design) order flow will be used for these network service arrangements. Logical parameters necessary for SOLID provisioning will be included on the LSR. A CLIF form will not be necessary for each end user order.

NOTE: Implementation of the new Broadband Wholesale Service being introduced as part of Project Pronto is expressly contingent upon resolution of regulatory and Merger Conditions issues pending before the Federal Communications Commission ("FCC"). The Broadband Wholesale Service, including rates, terms and conditions, is subject to change, modification or withdrawal by the SBC ILECs, in their sole discretion, in whole or in part, either before or after the service becomes operational as a result of the matters now pending before the FCC.

Network Service Arrangements to Be Included on Service Order: TN, End User Address, NC/NCI Code, USOC, Class Service, SOLID FID, and CFA (in both the Litespan and in the OCD).

A/Z LOC: The A Location will be the CLEC OCD Port termination in the Serving Wire Center. The Z Location will be the end user address.

END USER SERVICE ORDER FLOW:

Network Service Arrangements: DLE DSL-HFPSL **or** DLE-DSL Sub-Loop **and** DLE-DSL Feeder

Service Order: LSR.

Intervals: Intervals for this offering will be identical to existing intervals for existing DSL capable loops.

Network service arrangements to Be Included On Service Order: NC/NCI Code, USOC, Class of Service, FID 1 : CFA (OCD Port From Above ASR Order), FID 2 : VPI/VCI For OCD Port (From Above Order), FID 3 : VPI/VCI For Litespan (CLEC Parameters for their ATM Network), FID 4 : Code Set for CLEC Profile in SOLID.

Sample Order Flow: (See Diagram Below)

1. CLEC Establishes Infrastructure Network service arrangements as Outlined Above.
2. CLEC Builds Profile in SOLID
3. CLEC Issues LSR for End User Network service arrangements Outlined in this Section.
4. LSR is Processed by LSC
5. LSR Flows Through to SORD – SOAC - Network - SOLID
6. Network Configures Physical Network Service Arrangements for Service.
7. SOLID Configures Logical Network Service Arrangements for Service.

4.) SOLID

A new interface referred to as SOLID is being developed that will manage both Litespan and OCD provisioning. The logical parameters necessary for Litespan and the OCD will be established in SOLID. As mentioned above, in conjunction with each OCD port the CLEC will submit a CIF form for information to flow from the CLEC; through the LSC; and to the NOC for establishment of there logical parameters in the OCD. A CLIF will not be necessary on end user orders. In that instance, the logical information will be contained on the LSR and will interface with the SOLID system.

SOLID PROFILES

CLECs will be allowed to build into SOLID a profile of service offerings that consist of combinations of various factors. Those factors are listed on the following flow chart. CLECs will be provided a set of values they can input for each factor and can establish any number of combinations of these network service arrangements that they wish. It is in this manner that CLECs will be able to offer different speeds and types of DSL service. CLECs will build these profiles via a web interface to SOLID and will be allowed to build an indefinite number of combinations.

5.) MECHANIZATION OF SERVICE ORDER FLOW

NOTE: Implementation of the new Broadband Wholesale Service being introduced as part of Project Pronto is expressly contingent upon resolution of regulatory and Merger Conditions issues pending before the Federal Communications Commission ("FCC"). The Broadband Wholesale Service, including rates, terms and conditions, is subject to change, modification or withdrawal by the SBC ILECs, in their sole discretion, in whole or in part, either before or after the service becomes operational as a result of the matters now pending before the FCC.

ASR: The ASR will be submitted by CLECs mechanized through the EXACT and CESAR systems. This is available today, but is dependent upon a CLEC having established OSS connectivity to the EXACT and CESAR applications

LSR: The LSR will be submitted mechanized in a similar manner to all other LSRs submitted today. Mechanization will be available by 5/29/00 via EDI.

CLIF: Telco service order and downstream systems are not capable of managing logical layer assignments. In SBC, similar customer information forms are used for advanced services, i.e., Frame Relay (FRIF), Cell Relay (CRIF), VPOP-DAS (DIF), etc. SBC is developing a method for CLECs to submit the CLIF form via the Extranet.

NOTE: Implementation of the new Broadband Wholesale Service being introduced as part of Project Pronto is expressly contingent upon resolution of regulatory and Merger Conditions issues pending before the Federal Communications Commission ("FCC"). The Broadband Wholesale Service, including rates, terms and conditions, is subject to change, modification or withdrawal by the SBC ILECs, in their sole discretion, in whole or in part, either before or after the service becomes operational as a result of the matters now pending before the FCC.

ATTACHMENT 3:

SBC BROADBAND SERVICE ASR ORDERING GUIDELINES

NOTE: Implementation of the new Broadband Wholesale Service being introduced as part of Project Pronto is expressly contingent upon resolution of regulatory and Merger Conditions issues pending before the Federal Communications Commission ("FCC"). The Broadband Wholesale Service, including rates, terms and conditions, is subject to change, modification or withdrawal by the SBC ILECs, in their sole discretion, in whole or in part, either before or after the service becomes operational as a result of the matters now pending before the FCC.

INTRODUCTION

The following document outlines the service order flow for the infrastructure network service arrangements associated with the Broadband Service. Those network service arrangements include the OCD Port Termination and associated cross-connect to CLEC collocation. The following ASR examples are valid for the Southwestern Bell and Pacific Bell regions at this time. SBC is validating these examples to determine if they can encompass the Ameritech and SNET regions. Further updates to this material will be provided via the CLEC handbook and/or future Accessible letters.

HIGH LEVEL ORDERING PROCESS FOR INFRASTRUCTURE NETWORK SERVICE ARRANGEMENTS

1. CLEC requests OCD Port Termination and associated cross-connect to SBC Local Service Center (LSC) using Access Service Request (ASR).

2. CLEC prepares CLIF Form in SOLID System - Form is stored in the system via Save.

3. SBC LSC performs Facility Check Inquiry

4. Upon Verification of Facilities , LSC FOCs Back to CLEC OCD Port Circuit ID and Order Number. Due Date intervals after the verification of facilities will vary by region but will equate to the same intervals for OC-3 or DS3 dedicated transport.

5. SBC LSC Representative Accesses SOLID system and Populates Form with OCD Port Circuit ID, PON Number and Order Number.

6. Order is Distributed By SBC LSC To Various Network Organizations for provisioning. SBC network organizations access SOLID system to retrieve the saved form and provision according to the material submitted by CLEC.

SERVICE REQUEST

The following ASR screens are used:

1. ASR Administrative Data - 1
2. Administrative Data - 2
3. Special Access

ASR ADMINISTRATIVE SCREEN

The following information on ASR Administrative Data - 1 screen indicates Broadband Service OCD requests:

1. Four-numeric CLEC Code on CC Field
2. A "Y" in the UNE field
3. "S" Requisition Type & Status in REQTYP Field

No verbal requests will be accepted. Refer to ASR Preparation Guide for more information and complete description of all fields.

NOTE: Implementation of the new Broadband Wholesale Service being introduced as part of Project Pronto is expressly contingent upon resolution of regulatory and Merger Conditions issues pending before the Federal Communications Commission ("FCC"). The Broadband Wholesale Service, including rates, terms and conditions, is subject to change, modification or withdrawal by the SBC ILECs, in their sole discretion, in whole or in part, either before or after the service becomes operational as a result of the matters now pending before the FCC.

ENTRIES IDENTIFYING DS3 AND OC3C OCD

1. DS3 SERVICE REQUEST

NC Code = HF-6
NCI Code =04QB6.33
Example: ASR for DS3 service request

```
+-----------------------------------+
|                SPECIAL ACCESS     |
|CIRCUIT DETAIL                     |
|NC HF-6 NCI 04QB6.33        TLV    |
|SECNCI                   SECTLV ___|
|HVP __   NSIM __   RSP __          |
|CFA                                |
|SCFA _____________________         |
+-----------------------------------+
```

2. OC3C SERVICE REQUEST

NC Code = OB-P
NCI Code =02QBF.LL

Example: ASR for OC3c service request

```
+-----------------------------------+
|                SPECIAL ACCESS     |
|CIRCUIT DETAIL                     |
|NC OB-P NCI 02QBF.LL        TLV    |
|SECNCI                   SECTLV ___|
|HVP __   NSIM __   RSP __          |
|CFA                                |
|SCFA _____________________         |
+-----------------------------------+
```

Note: NC and NCI same at both location (SECLOC)

ACCESS SERVICE REQUEST - DIAGRAMS

DS3 (COLLOCATION CAGE)-TO-OCD PORT

The following is a completed ASR sample for a DS3 Collocation Cage-to-OCD Port:

1. PIU Always use 0 for assembly of network elements service requests.
2. Spec codes are required by the CLEC for SWBT
3. This service configuration requires the following ASR screens:
   - ASR Admin Data – 1, Admin Data – 2, Special Access
4. CLEC must provide the following unique order information:
   - ACTL, Tie Down Information in APOT of ASR, Valid NC and NCI Code Combinations and CLLI Code of the OCD switch location in the SECLOC field.

NOTE: Implementation of the new Broadband Wholesale Service being introduced as part of Project Pronto is expressly contingent upon resolution of regulatory and Merger Conditions issues pending before the Federal Communications Commission ("FCC"). The Broadband Wholesale Service, including rates, terms and conditions, is subject to change, modification or withdrawal by the SBC ILECs, in their sole discretion, in whole or in part, either before or after the service becomes operational as a result of the matters now pending before the FCC.

ASR ADMINISTRATIVE DATA - 1

AMINISTRATIVE SECTION ORD NO _____ MORE _
ICSC **PT04** PON **UNIQUE2CLC** VER __ NOR __ OF __ ASR NO _____
ASC-EC ____ OEC 1 ____ OEC 2 ____ OEC 3 ____ OEC 4 ____ OEC 5 ____ OEC 6 ____
D/T SENT **04 - 21 -00 - 0100PM** DDD **05 - 01 –00** PROJECT _____ RTR S CNO __

REQTYP **SD** ACT **N** FDT _____ SUP _ AFO ____ TQ __ EXP _ AENG _ ALBR _ QA _
CCNA **ABC** CUST **ABC TELCOM** CC **0001** AGAUTH _ DATED __ - __ - __
CKR **XXXXX** PLU __ PIU **0**
ECCKT _____ UNIT ___ QTY **1**
FNI _____ CFNI _____ SPEC _____ QTY _____
PPTD __ - __ - __ PFPTD __ - __ - __ FBA _
BAN **222 - 222 - 2222** ACTL **SNJSCA11XXX** APOT **(1)** _____ AI _ TSP _____ - __
BIC _ BIC TEL ___ - ___ - ____ BIC ID _____ RORD _____
RPON _____ CCVN _____ AFG _ SPA _ BSA _ LTP ____
REMARKS
_____
_____
SCREEN OPTION __ PAGE __
A A2 S QC MP G

ADMINISTRATIVE DATA - 2

BILLING SECTION
ACNA **ABC** TE _ SCL _ SAN _____
BILLNM SBILLNM _____
STREET FLOOR _____ ROOM _____
CITY STATE __ ZIP CODE __ - ____
BILLCON TEL NO _ - _ - __ - ____
VTA _____ EBP _____ ABC A _ C _ D _ F _ I _ L _ M _ O _ U _

CONTACT SECTION
INIT **JOIHN DOE** TEL NO **415 –111-1111-** ____
STREET **525 MARKET ST** FLOOR ___ ROOM
CITY **SAN FRANCSICO** STATE **CA** ZIP CODE **94107 -** ____
DSG CON **SUSAN SEVANS** DRC ___ FDRC ___ TEL NO **415 – 111-2222 -** ____
STREET **525 MARKET ST** FLOOR ___ ROOM **123**
CITY **SAN FRANCISCO** STATE **CA** ZIP CODE **94107 -** ____
IMP CON **BETTY BROWN** TEL NO **415 – 111 - 1234 -** ____
D/TREC **04-21-00 14:56**

SCREEN OPTION __ PAGE __
A A2 S QC MP G
V=001

NC and NCI codes indicate service request is DS3 or OC3

Example:

NOTE: Implementation of the new Broadband Wholesale Service being introduced as part of Project Pronto is expressly contingent upon resolution of regulatory and Merger Conditions issues pending before the Federal Communications Commission ("FCC"). The Broadband Wholesale Service, including rates, terms and conditions, is subject to change, modification or withdrawal by the SBC ILECs, in their sole discretion, in whole or in part, either before or after the service becomes operational as a result of the matters now pending before the FCC.

-NC
HF-6 = DS3
OB-R = OC3c

-NCI
04QB6.33 = DS3
02QBF.LL =OC3c

SECLOC - Secondary Location Identifies terminating end of circuit-OCD Port followed by CLLI Code preceded by "C" on SECLOC field of Special Access screen

SPECIAL ACCESS
CIRCUIT DETAIL

NC (1) NCI (2) TLV _____ T _____ R S25 A GBTN _____
SECNCI SECTLV _____ T _____ R NSB _ CKLT _____ NSL __
HVP _ NSIM _ SR ___ TRF _ MST _ ATN _____ SSS _ GETO _ GBTN _____ NVC __
CFA _____ CFAU _ MUXLOC _____
SCFA _____ HBAN ___ - ___ - ____ N/U _
PRI ADM _____ SEC ADM _____ CLK _ LMP _ PSPEED _____ ZLG _
LOCATION SECTION
SECLOC **CSNFCXXXX** OTC ____ SI _ SPOT _____
STREET BLDG _____ FLOOR _____ ROOM _____
CITY STATE ACTEL - ____
EUCON _____ EUTEL ___ - ___ - ____ - ____
ALOC _____
_____
LCON ACC _____
JS _ JKCODE _____ JKNUM __ JKPOS __ PCA _____ REN ____
CTX TEL ___ - ___ - ____ CTX LSTD NM _____

REMARKS

SCREEN OPTION __ PAGE __
A A2 S QC MP G
V=001

NOTE: Implementation of the new Broadband Wholesale Service being introduced as part of Project Pronto is expressly contingent upon resolution of regulatory and Merger Conditions issues pending before the Federal Communications Commission ("FCC"). The Broadband Wholesale Service, including rates, terms and conditions, is subject to change, modification or withdrawal by the SBC ILECs, in their sole discretion, in whole or in part, either before or after the service becomes operational as a result of the matters now pending before the FCC.

CLIF FORM EXHIBIT

CLEC INFORMATION FORM
OCD Connection

SBC Service Order No. _____
SBC Circuit ID _____
(To be completed by LSC personnel)

Customer Information

(To be completed by CLEC)

CLEC Name: _____
CLEC Technical Contact Name: _____ **Email:** _____
CLEC Technical Contact Telephone Number: _____
CLEC Contact Address: _____
PON (Purchase Order Number): _____

SBC Account Manager
(To be completed by CLEC)

Account Manager Name: _____**Tel. No.** _____

Logical Parameters
(To be completed by CLEC)

OCD Wire Center CLLI:

Connection Speed:	___**OC-3**	___**DS3**	
Connection Type:	___**UNI DCE**	___**UNI DTE**	___**NNI**
VPI Range:	**1-255**	**VCI Range:**	**1-63 Less 3,4,5, and 16.**
Clock Source:	____**External**	___**Internal**	

NOTE: Implementation of the new Broadband Wholesale Service being introduced as part of Project Pronto is expressly contingent upon resolution of regulatory and Merger Conditions issues pending before the Federal Communications Commission ("FCC"). The Broadband Wholesale Service, including rates, terms and conditions, is subject to change, modification or withdrawal by the SBC ILECs, in their sole discretion, in whole or in part, either before or after the service becomes operational as a result of the matters now pending before the FCC.