DOCKET FILE COPY ORIGINAL

Before the
FEDERAL COMMUNICATIONS COMMISSION
Washington, D.C. 20554

RECEIVED
JUN 1 3 2000

In the Matter of	)	CC Docket Nos. 96-98, 95-185
	)	WT Docket No. 97-207
Reciprocal Compensation for CMRS Providers	)	

REPLY COMMENTS
OF THE
UNITED STATES TELECOM ASSOCIATION

The United States Telecom Association ("USTA") hereby files its reply comments. Attached to USTA's reply comments is an analysis by Charles L. Jackson and William E. Taylor ("Jackson & Taylor") entitled *Reciprocal Compensation for CMRS Providers*. The Jackson and Taylor whitepaper rebuts the arguments raised by Sprint PCS and its consultants in support of asymmetrical cost recovery for CMRS providers through reciprocal compensation arrangements.

Sprint PCS provides no basis for granting the relief it seeks. The comments filed in response to the Sprint PCS filing make clear that the Commission's current symmetrical reciprocal compensation regulations provide Sprint PCS and CMRS providers with appropriate compensation. In addition, the Commission's regulations permit asymmetrical reciprocal compensation payments to any competitive carrier when the requesting carrier provides a forward-looking cost study to any state commission which then determinates if additional cost recover is warranted. There is no evidence presented by Sprint PCS, or any other party to this proceeding, that state commissions have failed to apply the Commission's reciprocal compensation regulations. What is clear is that "an efficient intercarrier compensation

mechanism must not distort: (i) the value consumers place on originating or receiving calls, (ii) the economic costs to the carrier of transmitting the call, and, most important, (iii) the market price paid by the cost-causer."[1]

Sprint PCS argues that a CMRS provider should be permitted to recover the cost of its network, including the cost of acquiring spectrum, by charging ILECs asymmetrical reciprocal compensation rates when terminating traffic that originates on another network. Sprint PCS argues that the Commission should declare that its network and spectrum acquisition costs are "additional cost" as defined in the Commission's reciprocal compensation regulations, which may be recovered through reciprocal compensation payments from wireline carriers.

As several commenters noted, the Sprint PCS reciprocal compensation proposal is contrary to existing reciprocal compensation regulations and inconsistent with sound public policy. Section 252(d)(2)(A)(i) and (ii) of the 1996 Act requires that a carrier's reciprocal compensation rates are based upon "a reasonable approximation of the additional costs of terminating" calls "associated with the transport and termination ... of calls that originate on the network facilities of the other carrier."[2] BellSouth correctly explains that the Commission's *Local Competition Order* concluded that "only that portion of the forward-looking, economic cost of end-office switching that is recovered on a usage sensitive basis constitutes an 'additional cost' to be recovered through termination charges."[3] As US WEST argues, the *Local Competition Order* acknowledged the substantial benefits in terms of "administrative efficiency,

---

[1] Charles L. Jackson and William E. Taylor, *Reciprocal Compensation for CMRS Providers* at 3, June 13, 2000.

[2] 47 U.S.C. §252(d)(2)(A)(i) and (ii).

[3] BellSouth Comments at 2.

equalizing carrier bargaining power, and avoiding gaming" of using ILEC cost as proxies for interconnected carriers when the Commission "directed states to establish presumptive symmetrical rates based on the incumbent LEC's costs for transport and termination of traffic."[4] The Commission also established regulations in Section 51.711(b) whereby "[a] state commission may establish asymmetrical rates for transport and termination of local telecommunications traffic only if the carrier other than the incumbent LEC proves to the state commission on the basis of a cost study ... that the forward-looking costs ... exceed the costs incurred by the incumbent LEC" to justify a higher rate.[5] Consistent with the 1996 Act, and the Commission's regulations, Sprint PCS may recover only costs for transport and terminating calls that originate on another carrier's network, whether based upon ILEC costs or decisions by state commissions that additional costs associated with end-office switching are warranted after Sprint PCS submits a forward-looking cost study that identifies "additional costs" of end-office switching that is recoverable on a usage sensitive basis.[6] Should Sprint PCS or any competitive carrier disagree with the decision of any state commission on reciprocal compensation payment arrangements, the proper forum for review established by the 1996 Act is federal district court, not the Commission.[7]

If the Commission were to grant the relief sought by Sprint PCS it would have far-reaching consequences on cost-recovery mechanisms and create unnecessary complications

---

4 US WEST Comments at 6.

5 47 C.F.R. §51.711(b).

6 GTE Comments at 4 ("Sprint simply must submit a forward-looking cost study that identifies its costs").

7 47 U.S.C. §252(e)(6).

regarding intercarrier compensation arrangements as USTA,[8] ILECs,[9] and AT&T[10] argue. Even if the arguments raised by Sprint PCS in favor of additional cost recovery through asymmetrical reciprocal compensation payments had merit, the Commission is not the proper forum for further review. There is no evidence Sprint PCS has availed itself of existing regulations in state proceedings. Sprint PCS has apparently failed to file a forward-looking cost study of its own with any state commission, or indeed in this docket, in support of asymmetrical cost recover through reciprocal compensation arrangements. Therefore, the Commission should deny the request of Sprint PCS.

---

[8] USTA Comments at 3 ("Sprint's proposed modifications to the reciprocal compensation rules for wireless traffic, are not only at odds with the Commission's existing pricing rules, but raise broader public policy issues that the Commission must address as a threshold matter. Specifically, if the Commission were to conclude that CMRS is a fundamentally different technology than wireline service, for reciprocal compensation purposes, it would first have to consider how reciprocal compensation regimes should be structured when different technologies, with dramatically different cost structures, are used at the originating and terminating end of a call.").

[9] BellSouth Comments at 5 ("By contrast, the customer of the CMRS provider would be relieved of responsibility to cover the cost of the loop-equivalent facilities in the CMRS network. These costs are currently recovered in the CMRS provider's contracts with their end-users. Allowing CMRS providers to recover these costs from the ILECs and/or ILEC customers would result in either double recovery or an unearned competitive advantage for the CMRS provider. There is no sound policy reason to tilt the competitive playing field ... in favor of CMRS providers.").

[10] AT&T Comments at 6-7 ("[T]he charges Sprint proposes for reciprocal compensation would necessarily have far-reaching effects on every other compensation, cost recovery, and subsidy regime developed by the Commission. If the Commission decides that carriers with higher cost are permitted to charge higher termination rates for local calls, it may well be forced to rethink its decisions on access charges, universal service, UNEs, number portability, and virtually all other cost recovery mechanisms it has put in place.... Every carrier that uses a technology different from the wireline standard, or incorporates different elements into its network would seize the opportunity to calculate compensation based on costs specific to its own situation. At a point in which the Commission should be attempting to make consistent the myriad of pricing schemes now being used, it should refrain from considering changes to the regime that should be used as a model for all the rest.").

Although the Commission believes that Sprint PCS deserves to be heard on this matter even though it has failed to demonstrate compliance with current reciprocal compensation regulations, Jackson and Taylor establish that Sprint PCS is not entitled to the relief it seeks. As Jackson and Taylor demonstrate "Symmetric rates that are based on the costs of an efficient firm provide proper economic signals to market participants, thus ensuring that competitive distortions do not arise.... Sprint's proposal conflicts with this basic premise and would result in losses in economic efficiency and require extensive cost regulation of a fledging competitive industry."[11] Jackson and Taylor show that economic efficiency is achieved if additional costs incurred to provide wireless services are recovered from the cost-causer.[12] As Jackson and Taylor explain, there are competitive benefits of applying symmetrical rates for reciprocal compensation arrangements: "Basing compensation on symmetrical rates and having the additional costs recovered from the cost-causing agent provides both carriers with optimal incentives to deploy innovative technology and provide higher quality service. Moreover, it also ensures that only those services that consumers sufficiently value will be provided by market participants." [13] Jackson and Taylor also dispute the conclusions reached by Sprint PCS that technological differences in networks require asymmetrical rates. Jackson and Taylor demonstrate that contrary to claims made by Sprint PCS, "the majority of costs in a modern wireless system are NTS [non-traffic sensitive] costs."[14]

---

[11] Jackson and Taylor at 1.

[12] *Id.* at 11.

[13] *Id.*

[14] *Id.* at 28.

Sprint PCS has failed to present any evidence of having made a case for asymmetrical cost recovery through reciprocal compensation in any state proceeding. In addition, CTIA provides no corroborative evidence supporting the arguments of Sprint PCS that state commissions need Commission guidance.[15] PCIA merely argues that state commission decisions in California and Washington, which respond to requests from paging carriers for asymmetrical reciprocal compensation, were incorrectly decided.[16] Conspicuously absent are any comments from state commissions or NARUC in support of Sprint PCS that the Commission provide further guidance on how state commissions should determine additional compensation payments for CMRS providers. State commissions are not in need of Commission clarification on how to interpret and apply current reciprocal compensation regulations. The Commission's regulations provide state commissions with guidance on how to determine reciprocal compensation for CMRS providers. As Sprint PCS acknowledges, California and Washington state commissions have made rulings on requests by paging carriers for additional reciprocal compensation. It is time for the Commission to require competitive carriers to comply with existing regulations, and not abuse the Commission's regulatory process to subvert prior Commission orders and regulations. Similarly, it is time for the Commission to require every competitive carrier who seeks redress from the Commission to provide evidence that they have first exhausted their state commission remedies and federal court review of any state commission decision prior to filing claims for relief with the Commission. Otherwise, filings such as that

---

[15] CTIA Comments at 3 ("As shown by Sprint PCS, certain states have apparently ignored the Commission's Rules which permit carriers to offer their own cost-based studies.").

[16] PCIA Comments at 6 ("The Sprint PCS Request indicates that state commissions have had difficulty applying the FCC's cost-based compensation principles to wireline networks, and cites state proceedings involving paging carriers in California and Washington as evidence of this fact.").

made by Sprint PCS, undermine the requirements of the 1996 Act, Commission regulations, and the due process rights of ILECs. On procedural and substantive grounds, the Commission should deny the request of Sprint PCS.

Respectfully submitted,

UNITED STATES TELECOM ASSOCIATION

June 13, 2000 ***By:*** Keith Townsend

Lawrence E. Sarjeant
Linda L. Kent
Keith Townsend
John W. Hunter
Julie E. Rones

1401 H Street, NW
Suite 600
Washington, D.C. 20005
(202) 326-7371

RECIPROCAL COMPENSATION FOR CMRS PROVIDERS

JUNE 13, 2000

by

Charles L. Jackson
JTC LLC

and

William E. Taylor
National Economic Research Associates, Inc.

TABLE OF CONTENTS

I. INTRODUCTION AND SUMMARY 1

II. ECONOMIC EFFICIENCY CONSIDERATIONS IN WIRELINE-PCS LOCAL INTERCONNECTION 4

A. ECONOMIC EFFICIENCY IS BEST ACHIEVED THROUGH SYMMETRIC RECIPROCAL COMPENSATION RATES 5
B. EXCEPTIONS FOR ASYMMETRIC RATES 6
C. DIFFERENCES IN COSTS DUE TO DIFFERENCES IN TECHNOLOGY SHOULD NOT NECESSARILY BE REFLECTED IN TELRIC 8
D. DIFFERENCES IN SERVICE QUALITIES SHOULD NOT GENERATE DIFFERENCES IN COSTS FOR SETTING ASYMMETRIC COMPENSATION RATES 9

III. ENGINEERING AND NETWORK CHARACTERISTICS OF WIRELESS SYSTEMS 12

A. WIRELESS SERVICES 13
B. WIRELESS VOICE SERVICES 15
C. OVERVIEW OF A WIRELESS TELEPHONE CALL 16
D. DEFINING THE COST DIVISIONS 17
E. HANDSET 18
F. THE PILOT CARRIER 19
G. HOME LOCATION REGISTER 20
H. COVERAGE CELLS VERSUS CAPACITY CELLS 21
I. TRAFFIC TRUNKS TO THE WIRELINE LEC 23

IV. CLASSIFICATION OF WIRELESS INFRASTRUCTURE COSTS 24

1. Switching Center 24
2. Signalling system 25
3. BSC 25
4. Backhaul 26
5. BTS 26
6. Structure and Antennas 27

B. WIRELESS COST CLASSIFICATION IN SUMMARY 27
C. RADIO SPECTRUM COSTS 29

V. CONCLUSIONS 30

I. INTRODUCTION AND SUMMARY

In a recent white paper prepared on behalf of Sprint, Bridger Mitchell and Padmanabhan Srinagesh (MS) describe a methodology for calculating the *additional costs* of terminating interconnected local calls on Personal Communications Services (PCS) networks.[1] MS argue that the application of forward-looking principles to PCS networks raises significant issues of implementation that were not considered by the Commission in its analysis of wireline networks. Specifically, they conclude that based on the Commission's rules, forward-looking traffic sensitive costs can be recovered in charges for transport and termination and, more importantly, all PCS network components, with the exception of handsets, are additional costs as defined by the Commission.

Apart from the proper level and nature of PCS network costs—which are important in their own right—the Commission's Public Notice raises fundamental economic issues. As the FCC points out in the *Local Competition Order*, efficiency considerations generally favor symmetric *reciprocal compensation* for interconnecting carriers based on the forward-looking cost (TELRIC) of an efficient firm.[2] As the FCC states (¶1086):

> A symmetric compensation rule gives the competing carriers correct incentives to minimize its own costs of termination because its termination revenues do not vary directly with changes in its own costs.

Symmetric rates that are based on the costs of an efficient firm provide proper economic signals to market participants, thus ensuring that competitive distortions do not arise. Symmetric rates avoid the cost-plus nature of regulation with respect to entrants' costs—with all its attendant economic distortions—that pervaded the industry prior to price cap regulation. Sprint's

---

[1] Bridger M. Mitchell and Padmanabhan Srinagesh, Transport and Termination Costs in PCS Networks: An Economic Analysis, April 4 2000, CC Docket Nos. 95-185, 96-98, and 97-207, referred to as (MS).

[2] *In the Matter of Implementation of the Local Competition Provisions in the Telecommunications Act of 1996*, 11 FCC Rcd 15499,16025, ("*Local Competition Order*").

proposal conflicts with this basic premise and would result in losses in economic efficiency and require extensive cost regulation of a fledging competitive industry.[3]

While the FCC rules permit *asymmetric* rates based upon a cost study in accordance with TELRIC principles, the *Local Competition Order* is silent on the nature of that study: i.e., on the legitimate economic reasons why an entrant's efficiently incurred costs might be higher than those of an efficient firm and thus require asymmetric rates. We disagree with Sprint's contention that differences in technology or service quality[4] justify asymmetric rates. In general, differences in technology or service quality do not generate legitimate differences in costs for the purpose of setting asymmetric compensation rates. Apart from distorting carriers' incentives to minimize costs, under asymmetric compensation, a wireline LEC that sends a call to a (higher-cost) PCS provider does not save in avoided costs what it incurs in reciprocal compensation payments. It is precisely this proposition—i.e., that carriers compensate each other based on the avoided costs of a fully efficient firm—that should govern reciprocal compensation and that enhances economic welfare.

Compensating carriers for transport and termination of calls that have different technological characteristics or provide different service qualities than that supplied by the originating carrier at the same rate as those of a fully efficient firm using least-cost technology to supply the same service as the originating carrier <u>will not</u> discourage these carriers from deploying their networks. Sprint's PCS service provides a fundamentally different type of service than wireline networks—specifically, it offers end users mobility which is valued differently than services from traditional wireline networks. Economic efficiency is achieved if

---

[3] "Symmetric" reciprocal compensation rates mean that the CLEC and ILEC pay each other the same rates when one terminates traffic on the network of the other. Some ILECs argue that if they are required to pay reciprocal compensation for ISP-bound traffic, the rate should be lower for such traffic (because per-minute costs associated with longer holding times are lower, for instance) than for ordinary voice traffic. Such rates are still "symmetric" because both LECs charge each other the same rate for ISP-bound traffic and the same (higher) rate for ordinary voice traffic. The observation here (for CMRS/wireline interactions) that different technologies or different service characteristics should not warrant *asymmetric* reciprocal compensation rates is fully consistent with the proposal to charge different *symmetric* reciprocal compensation rates for traffic having different cost characteristics.

[4] The phrase "service quality" here and elsewhere describes calls having different and desirable characteristics (i.e., mobility).

the additional costs incurred to provide this different type of service are recovered from the cost-causing agent. Therefore, an efficient intercarrier compensation mechanism must not distort: (i) the value consumers place on originating or receiving calls, (ii) the economic costs to the carrier of transmitting the call, and, most important, (iii) the market price paid by the cost-causer.

The success or failure of PCS providers and the success or failure of different types of PCS services should depend solely on how customers value those firms and services in the marketplace, not on the type of intercarrier compensation between network providers. To the extent that some PCS services are provided that would not be provided but for the existence of asymmetric rates, economic efficiency is reduced. The FCC and State Commissions, having already experienced the economic distortions and rent-seeking behavior associated with reciprocal compensation for ISP traffic, should avoid setting in place an intercarrier compensation system for wireless traffic that would distort local exchange competition, support higher cost carriers, and create incentives to generate uneconomic traffic.

In addition, from a practical perspective, we dispute MS's depiction of the PCS network and its implication that technological differences require asymmetric rates. MS's description of the technological differences between the wireline and wireless world—and the nature of the cost differences that result—contain numerous errors. It is insufficient to examine solely whether a facility is shared or dedicated—as MS do—in determining the *additional* costs to transport and terminate traffic that the facility imposes. There are many costs that MS identify as primarily traffic sensitive (TS) that are indeed not TS. MS describe a simple model of the cost structure of wireless—handsets are non-traffic sensitive (NTS), everything else is TS. It would be hard to be more wrong. Handsets have significant TS costs (not borne by the carrier). The infrastructure network has massive NTS costs: as we describe below, a simple model indicates that the vast majority of the infrastructure costs are NTS costs.

While the recommendations put forth by MS appear to be straightforward and simple to implement, the opposite is the case. Because of the added economic and engineering complexities of PCS networks—which are for the most part overlooked by MS—the correct solution is more complex. The end result is that following Sprint's recommendation will open

the door to far more extensive cost-based regulation of a thriving competitive industry that is at the forefront of the information age and is poised to provide immense value to consumers through the burgeoning market for such broadband services as wireless web browsing. Additional regulation of the wireless industry will not improve economic efficiency and is not consistent with the public interest. A better solution would be to establish reciprocal compensation based on symmetrical rates and, to the extent carriers such as Sprint PCS desire to provide a different quality of service, permit them to recover those additional costs from the cost causer through some other rate mechanism thus ensuring that only those services that consumers value and are willing to pay for are provided.

II. ECONOMIC EFFICIENCY CONSIDERATIONS IN WIRELINE-PCS LOCAL INTERCONNECTION

Section 252(d)(2) of the Telecommunications Act of 1996 requires that prices for the "transmission and routing of telephone exchange service and exchange access" be compensatory:

> such terms and conditions [must] provide for the mutual and reciprocal recovery by each carrier of costs associated with the transport and termination on each carrier's network facilities of calls that originate on the network facilities of the other carrier...

and based on incremental costs:

> such terms and conditions [must be] determine[d] on the basis of a reasonable approximation of the additional costs of terminating such calls. [emphasis supplied]

In addition, Section 252(d)(1) provides that interconnection rates should be based on the cost of providing interconnection, should be nondiscriminatory, and may include a reasonable profit. To implement this requirement, the FCC, in its *Local Competition Order*, applied the interconnection provisions of the Act only to traffic within a local exchange[5] and determined

[5] 47 CFR 51.305 (b) limits application to carriers providing "telephone exchange service," which is defined in 47 CFR 153 (47) as service within a telephone exchange. The rules for pricing reciprocal compensation for transport and termination of local telecommunications traffic are found in Subpart H of Section 51, which (continued...)

that the cost principle for determining the price of interconnection should be its version of total service long-run incremental cost, TELRIC, as described in 47 CFR 51.503 and 505.

A. Economic efficiency is best achieved through symmetric reciprocal compensation rates.

In general, the FCC established symmetrical rates for reciprocal compensation based on the incumbent LEC's incremental costs (§ 51.705(a)). It permits the state commission to establish asymmetrical rates for transport and termination of local telecommunications service only if:

> the carrier other than the incumbent LEC (or the smaller of two incumbent LECs) proves to the state commission on the basis of a cost study using the forward-looking economic cost based pricing methodology described in §§ 51.505 and 51.511 of this part, that the forward-looking costs for a network efficiently configured and operated by the carrier other than the incumbent LEC...exceed the costs incurred by the incumbent LEC..., and, consequently, that such that a higher rate is justified. [§ 51.711(b)]

In its discussion of symmetrical rates, the FCC observes that symmetric compensation gives the CLEC correct incentives to minimize its cost of termination [*Local Competition Order* ¶ 1086] and will give CLECs "reasonable opportunities" to enter the local exchange market [¶ 1088]. Indeed, basing reciprocal compensation on the costs of the most efficient supplier is precisely what would occur in unregulated, competitive markets, in which prices of services are driven towards the cost of the most efficient supplier, not the cost incurred by any particular entrant. The principal problem with permitting higher-cost firms to charge higher interconnection rates would be an immediate reduction in economic welfare because service would be provided by a firm whose costs exceeded those of an efficient firm. This loss in welfare is classified by economists as a "first-order" reduction in economic efficiency because

---

(...continued)

restricts reciprocal compensation to "telecommunications traffic...that originates and terminates within a local service area established by the state commission..." (§51.701(b)(1).

scarce resources are wasted on every unit of output supplied by the higher-cost firm.[6] In competitive, unregulated markets, entry by suppliers whose costs exceed those of incumbent firms would generally not occur, and customers would not have to pay the higher market price that would be necessary to sustain entry by the higher-cost firm.

Moreover, Sprint's proposal would require detailed cost regulation of wireless costs similar to the cost-plus type of regulation that dominated the industry prior to price cap regulation. This would require state regulators to determine the efficiently-incurred wireless investments needed to provide service, the forward-looking return on capital required and other forward-looking expenses. Wireless technology and costs are changing rapidly, and a TELRIC study based on Sprint PCS's current equipment and practices would have to be repeated frequently to reflect the on-going, changing costs of a currently-efficient carrier.

Asymmetric prices also violate a basic premise underlying intercarrier compensation: namely, that carriers' cost savings roughly offset their reciprocal compensation payments. With symmetric reciprocal compensation rates between carriers providing the same service, each carrier saves in avoided costs what it pays out in reciprocal compensation. Even if traffic is unbalanced, in this situation, neither carrier receives a windfall or loses money because it is obliged to terminate calls originating from other networks. Under *asymmetric* reciprocal compensation, however, a wireline ILEC that sends a call to a (higher-cost) PCS provider would save less in avoided costs than it would receive from reciprocal compensation payments.

B. Exceptions for Asymmetric Rates

While the FCC permits firms to petition for asymmetric rates, the FCC is silent on the nature of the legitimate differences between ILECs and entrants that would justify asymmetric rates. The Telecommunications Act requires that charges recover:

[6] In contrast, efficiency losses from pricing services above incremental cost are classified as second-order welfare losses because efficiency is only lost on the units of demand repressed by the excess of price above cost, i.e., on the units of demand which customers would have been willing to consume at a price equal to the cost of supplying those units of demand.

> costs associated with the transport and termination on each carrier's network facilities of calls that originate on the network facilities of the other carrier [§ 252(d)(2)(I), emphasis added]

which suggests that carriers should be compensated for their costs. However, the FCC is careful to warn state commissions [*Local Competition Order* ¶ 1089] that the asymmetrical costs in question must be those of "efficiently configured and operated systems" calculated giving "full and fair effect to [its] economic costing methodology". Apparent differences between the TELRICs of entrants and ILECs which stem from different assumptions about traffic volumes, depreciation lives, fill factors or costs of capital should not be treated as real differences: to be consistent with the FCC's TELRIC concept, the forward-looking economic cost of terminating traffic should be measured using the parameters of an efficient firm. For example, small firms that cannot achieve scale economies must compete at a cost disadvantage in competitive markets, and nothing in a competitive market permits a firm with a higher cost of capital to sell its wares at a higher price than a firm having a lower cost of capital. Why should ILEC subscribers pay more to terminate calls with a high-cost carrier, even if the cost differences are due to size or risk?

In theory then, how could the forward-looking economic cost of an efficient supplier be different for an entrant and an ILEC, particularly if they must be calculated using the FCC's TELRIC methodology? While the FCC provides little guidance on this issue, one possible answer is that an entrant may choose to serve a limited geographic area or a particular set of customers, whereas the ILEC's costs are averaged over all customers. In that case, an entrant having costs that are different than the ILEC's average termination cost is not necessarily inefficient. Therefore, legitimate reasons why an entrants' TELRIC differs from an ILEC's TELRIC include geographic or customer-type specialization by CLEC—as long as its costs of serving that segment are no higher (for those segments) than those of the ILEC which are averaged into its single TELRIC.

C. Differences in costs due to differences in technology should not necessarily be reflected in TELRIC.

In the FCC's definitions in the *Local Competition Order*, TELRIC is the idealized cost of an efficient supplier. Both in the *Order* and in economic theory, that cost concept is independent of the actual experience of the firm: what is measured is the expected response of an efficient firm to a change in demand equal to the total market demand, not what the response of any incumbent firm actually is. Firms whose costs of purchasing, installing and maintaining equipment are higher than necessary should not be rewarded through reciprocal compensation at any higher level than a competitive market would reward them, which would be at the cost of an efficient firm to provide those functions.

Similarly, if two firms provide the same service using different technologies, a competitive market would not compensate them at different rates simply because the costs of their technologies differ. Choice of technology is no different from any other economic choice a firm makes, and TELRIC calculations should not automatically ratify a firm's technological choices and insulate it from application of an efficiency standard. For example, an ILEC that can serve rural areas more cheaply with wireless technology (fixed or mobile) should use wireless costs in its mix of services for its TELRIC calculation. Symmetrically, if it would have been cheaper for a wireless CMRS provider to transport and terminate calls using wireline technology, then the TELRIC for the wireless carrier to terminate the same quality of call as the ILEC originated should be the wireline TELRIC. That is, if the forward-looking cost to transport and terminate a call is higher for an efficient CMRS provider because its technology generates a higher-quality service, that additional cost should not be recovered in reciprocal compensation, as discussed below. If the efficient, forward-looking cost of an efficient CMRS provider is lower because it provides a lower quality service, the FCC requires the CMRS provider to supply a TELRIC study and to recover no more than the TELRIC of the particular service it supplies:

This treatment of reciprocal compensation is reflected in §51.711(c) of the Commission's rules:

> Pending further proceedings before the Commission, a state commission shall establish the rates the licensees in the Paging and Radiotelephone Service..., Narrowband Personal Communications Services, ..., and Paging Operations in the Private Land Mobile Radio Services...may assess upon other carriers for the transport and termination of local telecommunications traffic based on the forward-looking costs that such licensees incur in providing such services, pursuant to Secs. 51.515 and 51.511.

The Commission's reasoning is set out in ¶1092-1093 of the *Interconnection Order*:

> Paging is typically a significantly different service than wireline or wireless voice service and uses different types and amounts of equipment and facilities...Using incumbent LEC's costs for termination of traffic as a proxy for paging providers' costs, when the LECs' costs are likely higher than paging providers' cost, might create uneconomic incentives for paging providers to generate traffic simply in order to receive termination compensation...we direct states...to establish rates for the termination of traffic by paging providers based on the forward-looking economic costs of such termination to the paging provider...

D. Differences in service qualities should not generate differences in costs for setting asymmetric compensation rates

There is another important economic issue that arises when one examines the proper intercarrier compensation mechanism between wireline and CMRS providers. When two carriers interconnect and provide fundamentally different service qualities or characteristics—thus increasing the efficiently-incurred termination costs of the carrier providing a higher quality service—reciprocal compensation is inefficient and would not likely be the type of compensation mechanism that arises between two networks in undistorted competitive markets. If a carrier chooses to provide a higher quality service it should not be compensated for terminating a call that originated on a standard-quality network—for which customers are paying standard quality prices—at the cost of a higher-quality call. Interconnection between wireline and CMRS providers is one such example of a standard-quality network (wireline) interconnecting with a higher-quality network (CMRS).

While transport and termination services provided by either the wireline or CMRS provider are similar in function—i.e., using network elements to ensure that the call gets delivered from the point of interconnection to the end user—there is a significant difference

that affects the optimal level of intercarrier compensation. A call on a wireline network is fundamentally different in many respects than a call on a CMRS network. From the customer's perspective, all calls are not the same and a minute is not a minute. For example, there are differences in quality and characteristics that include technical characteristics (e.g., noise and bandwidth) speed (e.g., normal, store-and-forward), and information content (e.g., notification, audio, video). These differences must be taken into account when determining the optimal level of intercarrier compensation between two networks.

Reciprocal compensation spreads the cost of terminating traffic on both networks over all users. When both networks provide similar type services—and thus generate similar efficiently-incurred costs—reciprocal compensation is efficient. However, when subscribers originate traffic having expensive qualities or characteristics—as is the case when a wireline customer places a call to a CMRS provider—reciprocal compensation is inefficient because customers do not face higher prices to reflect the higher cost they impose on the combined networks. When prices fail to reflect costs, economic distortions arise. An example illustrates this point.

Imagine a climber ascending Mt. McKinley in Alaska—or any mountain range in the United States—and having a mobile handset with service provided by a CMRS provider. In the extreme, the climber is on top of Mt. McKinley and uses Inmarsat, Globalstar, Iridium or like service. Clearly, the service provided by these carriers is different from the service provided by the wireline carrier. Before it fell into bankruptcy, the costs of terminating the average call on Iridium were much higher than the costs of terminating the average call on the wireline network. Under such conditions, is reciprocal compensation based on asymmetric rates—i.e., Iridium would have been permitted to charge higher termination rates than the wireline network—optimal and does it provide correct economic signals to market participants?

The answer is a clear no. The climber is paying Iridium because it is important for some people to be able to receive or send calls from anywhere on the face of the earth, e.g., on the top of Mt. McKinley. Some people value the ability to receive or send calls anywhere on the face of the earth more than the economic costs incurred to provide this service. Since these consumers are willing to pay at least the economic costs, economic efficiency is increased

whenever they are able to purchase the service. Moreover, there are some callers that originate calls to Iridium's subscriber that place a high enough value on the call that they also would be willing to pay the economic costs of the call—again, economic efficiency is increased. But, just as important, there are customers who do not value the ability of receiving or sending calls anywhere on the earth more than the economic costs incurred to provide the service. Likewise, there are callers who do not place a high enough value on calling a friend on Mt. McKinley and are not willing to pay the economic costs of such a call. Intercarrier compensation for transport and termination of such calls must not distort these decisions.

Reciprocal compensation based on asymmetric rates distorts market outcomes because ILEC subscribers who place calls to friends on the top of Mt. McKinley do not face a price that fully reflects the cost to transport and terminate the call. More calls are made by such customers than is socially optimal. And since reciprocal compensation spreads the cost of terminating traffic on both networks over all users, ILEC customers who do not cause any of the costs of terminating the traffic on the higher cost network are made to pay for a portion of those costs. In addition, to the extent that reciprocal compensation with asymmetric rates permits Iridium subscribers to pay lower subscription and usage rates than would otherwise be the case, too many calls are placed and resources are used inefficiently. Fundamentally, the danger of reciprocal compensation based on asymmetric rates for higher quality networks is that such a compensation mechanism may support technologies or services that would not be able to survive if left to market forces.

What then is the best form of intercarrier compensation between two networks of different quality service? Economic efficiency is increased if the additional costs incurred to provide higher quality service are recovered from the cost-causing agent. Basing compensation on symmetrical rates and having the additional costs recovered from the cost-causing agent provides both carriers with optimal incentives to deploy innovative technology and provide higher quality service. Moreover, it also ensures that only those services that consumers sufficiently value will be provided by market participants.

III. ENGINEERING AND NETWORK CHARACTERISTICS OF WIRELESS SYSTEMS

If it were determined (unwisely, in our view) to permit wireless carriers to charge asymmetric reciprocal compensation rates for transport and termination based on their costs, we would then be compelled to understand their costs of handling "additional traffic." The authors of the Charles River Associates study (CRA) present their view of the cost structure of wireless telephone systems clearly. For example their Figure 1 shows that they regard everything except the handset and traffic sensitive.

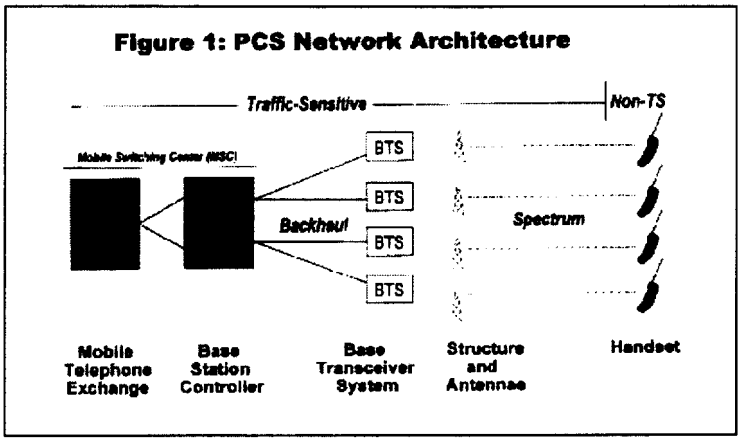

Figure 1 CRA's Figure 1

Similarly, they state,

> Analyzing each component of a PCS network, we conclude that the costs of all components, excepting those of PCS handsets, are additional costs as defined by the Commission.

There are profound flaws in the CRA analysis. This section has three parts. First, we address the services offered by modern wireless systems, such as Sprint PCS, and establish that call termination is just one of many services that is provided over the wireless network. Second, we discuss the basic functions of a wireless network and show that much of the network infrastructure is required in order to provide the option of placing and receiving telephone calls or Internet access. Third, we look in more detail at the various elements of a wireless system, identify the extent to which the costs of each subsystem are caused by additional usage, and provide an estimate of the fraction of the costs of a modern wireless

network, such as Sprint's, that are due to usage rather than to other activities. We follow CRA's partitioning of the costs into the carrier's network (hereinafter infrastructure), radio licenses or radio spectrum (spectrum) and subscriber units (handsets).

A. Wireless Services

Wireless carriers provide a variety of services, including voice telephone service, short message services, Internet access, automobile services, and data communications. The same fundamental infrastructure is used for providing all of these services.

For example, in recent press releases, Sprint has said,

> Sprint PCS Wireless Web offers customers instant access to news, weather, shopping, stocks, sports, email and other select Internet information directly on the minibrowser of their Internet-ready Sprint PCS Phone.[7]

and,

> Sprint PCS, Barnes & Noble Form Mobile Shopping Pact—Sprint PCS and Barnes & Noble.com today announced the nationwide availability of Barnes & Noble.com Internet shopping services on the Sprint PCS Wireless Web. Sprint PCS, the nation's largest and fastest-growing 100 percent digital nationwide wireless network, is now providing customers with another choice for nationwide access to two-way Internet shopping via the Sprint PCS Wireless Web with one of the world's largest Web sites, Barnes & Noble.com.[8]

For an extra $2.95 per month, Sprint also offers a service, called Roadside Rescue, that provides battery service, towing, gasoline, and other help with automobile failures on the highway. In describing how to use Roadside Rescue, Sprint says,[9]

---

[7] Sprint Press Release, *Sprint Launches Advanced Wireless Service—Including the Sprint PCS Wireless Web— in Charleston, SC.* CHARLESTON, SC, May 19, 2000.

[8] Kansas City, MO., May 2, 2000.

[9] http://s3.sprintpcs.com/services/ie.asp?target=header_learn.html

> Just dial **#ROAD** from your Sprint PCS Phone. Or dial a toll-free number from any other phone.
>
> As long as your Sprint PCS Phone is with the vehicle that needs help, service costs are covered.

Figure 2 Sprint Promotional Materials on Roadside Services

Wireless telephone services can be divided into two major components or elements—providing the **option** to use the service and actual **usage**. Many consumers buy wireless telephones and subscribe to wireless service in order to gain access to calling at many locations. Being able to call 911, AAA or a tow-service in the case of a highway emergency is one example of such an option demand. A person buying wireless service for such emergencies desires the option of calling at many locations where he or she is likely to travel. The subscriber's home neighborhood is one such location—but so too are remote highway locations, miles from the nearest pay telephone.

Similarly, advocates for victims of domestic violence support the provision of wireless phones to abuse victims to give them the option to call. The Wireless Foundation states,

> "The national Donate a Phone campaign collects wireless phones to benefit victims of domestic violence. In the hands of a victim, *these phones are a lifeline, enabling them to call for assistance when faced with an emergency situation.*" [10]

GM offers its OnStar service based on the installation of a GPS receiver and a wireless phone in automobiles. GM says,

> Current OnStar services include automatic notification of air bag deployment, stolen vehicle tracking, OnStar MED-NET, AccidentAssist, emergency services, roadside assistance with location, remote door unlock, route support, OnStar concierge,

[10] http://www.wirelessfoundation.org/12give/ (emphasis added). See also the website for the National Coalition Against Domestic Violence at http://www.ncadv.org.

> and convenience services such as location of hotels, restaurants, gas stations and other points of interest.[11]

The value of OnStar services such as remote door unlocking and automatic notification of air bag deployment depend on the widespread coverage by the wireless systems providing the communications infrastructure to the OnStar system. In a service such as OnStar or for customers who buy a wireless phone only for emergency calling, consumers depend on the ability to place calls in many locations. However, such customers are not likely to actually place calls in those locations.

B. Wireless Voice Services

The simplest wireless phone service is rendered to users who pick up their handset, dial the operator and charge a call on a credit card. This arrangement does not require that the user have a preexisting account with the wireless carrier (although it does require does require a credit card account). There are no monthly subscription fees. We are aware of suggestions that, for emergency purposes, one should keep an old cellular phone in the trunk of each car, just as one keeps tools, flares and a flashlight. A limitation of this arrangement is that the user does not have a telephone number and can't receive calls. In addition, usage costs are high because of the substantial transaction costs.

More common is wireless services where the user subscribers to wireless service, calls can be dialed with reduced transactions cost (e.g., without a manual credit check), and incoming calls are delivered to the handset. In order to provide such presubscribed services and to permit customers to travel around the country and receive service far from their home locations, wireless service require substantial underlying facilities. For example, the wireless system keeps information on every handset in a database called the Home Location Register (HLR). Data on all handsets from distant systems that have roamed into a system's service area are kept in a Visitor Location Register. An Authentication Center assists with checking to see that handsets are not clones or otherwise fraudulent.

---

[11] See http://general.motors.xs2.net/news/events/sema99/onstar.htm.

C. Overview of a Wireless Telephone Call

Modern wireless networks are systems of enormous complexity and subtle beauty. Consider the process of placing a telephone call in a modern IS-95B network such as that run by Sprint. The process begins when the consumer turns on his or her handset. Upon power-up the handset searches for a wireless system. It begins by searching for a CDMA Pilot Channel and acquiring the signal of that channel. Once the handset finds a Pilot Channel and acquires it, the handset then finds the Synch Channel corresponding to that Pilot Channel and obtains system configuration and timing information from the Synch Channel. If the system configuration information is for a wireless system that the handset is authorized to use, the handset then begins the registration process. If the handset recognizes that it is not authorized to use the wireless system, it begins searching for another Pilot Channel.

After recognizing that it can proceed to registration, the handset sends a message to the base station on one of the cell's Access Channels alerting the wireless system to the presence of the mobile unit.[12] The handset and the wireless system then have a brief dialog during which the wireless system verifies that the handset is permitted to use the system and records in one of the Location Registers which cell is serving the handset. The system transmits to the handset various parameters, such as how far the handset can travel before it must reregister. The handset stores these parameters and then goes to sleep. The handset then wakes up at prescheduled times and listens on the Paging Channel to see if there are any incoming messages for the handset. If the user pushes the power off button on the handset, before the handset turns itself off, it notifies the wireless system that the handset will powering off. This is another form of registration—really of deregistration. After getting such notification from the handset, the system updates the entries in the Location Registers. Similarly, if the handset travels into new cells or if sufficient time passes, the handset will register again. Thus, the information in the Location Registers can be kept up-to-date and properly reflect the status of each handset.

[12] The Access Channel is a subdivision of the upstream (mobile-to-base) or reverse radio channel. Information about the Access Channels is broadcast to all handsets by the base station using the Synch Channel.

Once the handset has registered, it is ready to handle traffic. If the user now dials a number on the handset and pushes send, the handset will use an Access Channel to notify the wireless system that the handset wishes to call that number. The system and the handset will then exchange a series of messages and user communications will be established over Traffic Channels.

The process for an incoming call is similar. When a call comes in to the mobile switch, it interrogates the proper Location Register to determine which cell is serving the handset. It then sends a message to the handset over the Paging Channel from that cell. The handset receives the message, engages in a short dialog with the mobile switch, and begins the process of notifying the user of an incoming call (i.e., the handset rings and displays caller ID information). If the user answers the call, communications are established.

D. Defining the Cost Divisions

The first question that arises is, "What is the proper base to measure the added costs of carrying traffic?" CRA considers the base to be no network at all. Then, they assign all costs of the network to traffic. Their theory appears to be that if there were no traffic there would be no network, so the network is traffic sensitive. However, this is incorrect as a matter of both engineering and economics. As discussed above, some nontelephony uses of wireless networks—for example the OnStar notification of the fact of airbag deployment and the geographic location of that deployment or browsing the web—require the same infrastructure as do telephone calls. Similarly, providing the option to call—the ability to place calls at many locations where one will never actually call—is an important service.

We consider two different levels of network operation or function. The first category of network activity, which we will call *option costs* (corresponding more or less to non-traffic sensitive [NTS] costs)—consists of all the costs that must be incurred in order to give a subscriber the capability or option of placing and receiving calls. We also consider a second category of network activity—which we call *usage costs* (corresponding to traffic sensitive costs)—consisting of all the added costs that are incurred when the network is actually carrying traffic. For example, the entry of information describing a subscriber's equipment (e.g., the

electronic serial number [ESN], or equipment capabilities, passwords, phone numbers, etc.) into databases necessary to permit calling is a non-traffic sensitive cost. Just consider information about the telephone number used with the phone. That number must be entered into both the carrier's database and the subscriber unit. The costs of the data entry and of the data storage do not vary with usage. Rather, they are incurred in order to permit usage. These costs are similar to the costs of the loop or the line card in wireline telephone service in that they must be incurred before the users phone can even ring—let alone carry a conversation. The table below lists some illustrative option costs and usage costs for both wireline and wireless telephony. Corresponding entries are paired for the two systems. This table is illustrative only, and many wireless costs are not considered.

TABLE 1
Comparing Cost Structures of Wired and Wireless Telephony

Wireless		Wireline	
Option Costs	Usage Costs	Option Costs	Usage Costs
Handset except for battery	Shortened battery life	CPE	Wear and tear on CPE caused by use
Pilot carrier transmitted by CDMA base Station		Loop	
Home Location Register		Per-subscriber entries in Class 5 switch	
	Capacity cells		Tandem switches
	Traffic trunks to LEC		Traffic trunks between central offices

E. Handset

Let us address the entries in the table as an introduction to a more detailed consideration of wireless system costs. As CRA recognizes, the wireless handset is necessary for wireless

communications.[13] Handset usage, talking on telephone calls, imposes costs in the form of reduced battery life. Current technology compact, high energy-density batteries (such as Li-ion, or NMH) can only be recharged a finite number of times (typically a few hundred times). Conversational usage cuts battery life. Consequently, usage increases battery costs, and handset costs are usage sensitive. For example, a $50 battery good for 200 charges with 1.5 hours of talk time per charge, would cost 0.3 cents per minute of conversational use. (See, e.g., http://www.cellular-battery.com/qualcomm/index.htm or http://www.kyocera-wireless.com/thin/accessories.html.)

The CRA assertion that handset costs are not traffic sensitive is incorrect. If one separates the nonbattery portion of the handset from the battery portion, then the CRA assertion is correct. The wireless handset (ignoring the battery) corresponds to the wireline telephone user's telephone instrument and inside wiring.

F. The Pilot Carrier

Sprint operates a CDMA system in the PCS bands in the United States. This system was originally standardized as ANSI-J-STD-008-1996 (now replaced by TIA IS-95B).[14] In our discussion we discuss the characteristics of wireless systems using examples drawn the CDMA technology.[15]

CDMA systems transmit multiple wideband radio signals in a single 1.25 MHz wide band of frequencies. The IS-95 design divides up the outbound signal from each base transmitter into 64 separate channels, each associated with a separate Walsh code (Walsh-0

---

[13] CRA asserts that the handsets are NTS costs. Of course, strictly speaking, in the usual run of events the carrier does not even incur handset costs—because the handsets belong to the customer not the carrier. Handsets are NTS costs the same way a customer's suit (with its pocket essential for transporting and storing the handset) or purse (capable of storing the handset) are NTS costs. A more reasonable view of the world is to focus on the carrier's network and the costs of that network.

[14] These standards are not terse. J-STD-008 is more 3.25 inches thick when printed (double sided) on standard office copy paper. We estimate that it runs to about 800 sheets or 1,600 pages.

[15] Although the standards are the authoritative source for specifying the technology, other documents are more accessible. Two good references on CDMA are David J. Goodman, *Wireless Personal Communications Systems*, Addison-Wesley, Reading MA, 1997, and Andrew J. Viterbi, CDMA: *Principles of Spread Spectrum Communication*, Addison-Wesley, Reading MA, 1995.

through Walsh-63). Although not strictly correct, it can be helpful to think of each of these Walsh codes as a separate frequency or channel transmitted from the base station.[16] Each CMDA cell transmits a Pilot Carrier on Walsh-0. That pilot signal consists repeated transmissions of the Walsh-0 waveform with no information modulation. Mobile units use the pilot signal to find the base station and to synchronize their operation with the base station. Without the pilot channel, mobile units would be unable to operate. But, the pilot channel does not carry any traffic—rather it acts more like a navigational beacon showing the handsets where to look for signals.

The pilot signal corresponds, at least in part, to the loop plant of a wireline carrier. The pilot signal is always there and is just the same whether the cell is carrying no calls, 1 call, 10 calls or 30 calls.

G. Home Location Register

Wireless systems maintain several databases that are needed to manage calling. One of these is the Home Location Register (HLR). A wireless systems' HLR contains the subscription information about each handset served by the system. For example, an HLR might contain an entry denoting that, when the handset is turned off or busy, calls should be forwarded to voice mailbox.[17] Or the HLR may contain information indicating that calling is restricted to certain classes of numbers. The need to store such information is not a traffic-sensitive function. Rather, such information is needed to provide the option of using service. The speed of the processor needed with the HLR may well be a function of usage. Each call generates inquiries to the HLR; more calls mean more processing at the HLR. However, other events, such as turning a handset on or off, also generate transactions at the HLR and require processor capability. HLR processor capacity is consumed even in the absence of any

[16] Mathematically speaking, the Walsh functions provide a set of nonsinusoidal but orthogonal basis functions for information transfer from each cell site.

[17] http://www.nacn.com/industry/industry_faqitem5_frame.htm contains a discussion of support of IS-41 features across various vendors HLR products.

telephone conversations. For example, the HLR records whether the handset is currently turned on, and if turned on, which base station is serving it.

These features of the HLR are similar to features of the wireline class 5 switch. For example, a class 5 switch has a database with entries for each line. One of the entries in this database is a specification of the presubscribed interexchange carrier (PIC code) for that subscriber. Another possible entry database in the class 5 switch is the number to forward a call to if the subscriber's line is busy. As in the wireless case, these entries are needed to provide the option for service; their costs do not vary with the number of calls.

H. Coverage Cells versus Capacity Cells

Wireless systems have two types of cells—coverage cells and capacity cells. Cells serving some locations are installed in order to permit consumers traveling to or through that location to continue their conversations. For example, a highway may pass through a short canyon that blocks radio signals. A cell may be installed in order to provide service in the canyon so that calls made by people in cars passing through the canyon are not lost. The cell may never carry more than two or three calls and may only serve a typical call for a minute, but it is necessary to support mobile use of the service. Cells along highways outside of town, in low-density areas, and in resort areas are often such coverage cells. Sprint's PCS licenses contain an obligation to provide coverage to population in the license areas. See 47 CFR 24. Thus, coverage may also be provided to meet regulatory requirements as well as market requirements.

For example, Sprint provides wireless coverage in Hayden and Athol, Idaho.[18] See Figure 3 below which was taken from the Sprint PCS website. Hayden has a population of about 7,500 and Athol a population of only 500. Athol is a small town on State 95. Wireless subscribers may strongly value the option of placing and receiving calls there. But, given the limited population of Idaho's Athol, it seems unlikely that cells have been split there to increase

[18] http://s4.sprintpcs.com/learn/coverage_intro.asp.

capacity.[19] Rather, it seems far more likely that the Sprint facilities there were installed to provide the option of calling.

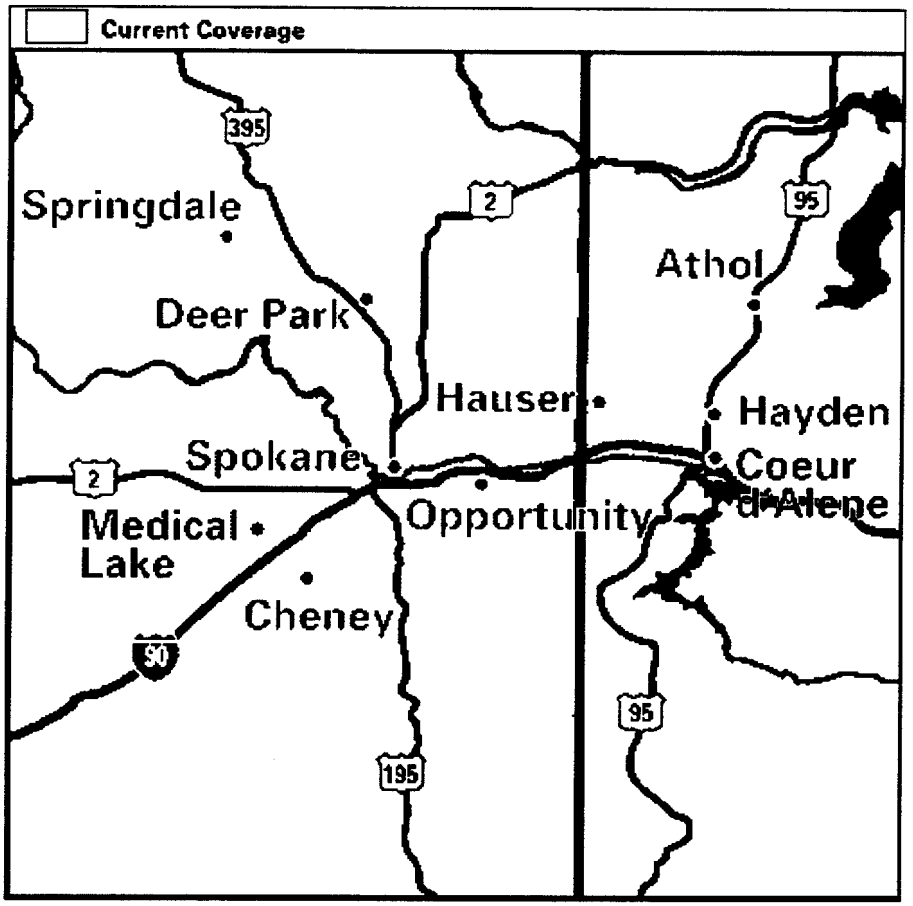

Figure 3 Sprint Coverage Near Spokane Washington and Coeur d'Alene Idaho.

In contrast, in urban areas peak-hour traffic may exceed the capacity of a minimal coverage cell. In that case, additional radio capacity can be added at the cell site to expand the capacity of the cell. Ultimately, all the possible radio channels available to a carrier are exhausted, and two or more smaller cells must replace the cell (a process called cell splitting). The additional costs incurred by adding radio capacity at a cell site or by cell splitting are purely costs associated with usage—even though a new cell also must have a pilot carrier and other features associated with permitting handsets to make and receive calls. We expect that

[19] According to the U.S. Gazetter, Idaho's Athol is neither the biggest or smallest Athol in the U.S. (measuring by population).

cell splitting, for capacity reasons, will be rare in a network such as Sprint's.[20] Sprint has PCS licenses for both 30 MHz and 10 MHz blocks—with many of their licenses in major urban areas being 30 MHz licenses. A single CDMA RF channel requires 2.5 MHz (1.25 MHz in each direction) and can carry about 40 conversations. Thus, 30 MHz can support at least 10 CDMA RF channels (there may be some loss of capacity due to requirements to protect adjacent bands) and one cell can support at least 400 active conversations. CDMA technology also permits reusing RF channels in multiple sectors from a base station. Typically, base stations support either 3 or 6 sectors. A 6-sector base station, using 10 CDMA RF channels in each sector could support 2,400 conversations. This is substantial capacity and shows how much growth is possible before cell splitting is required.

I. Traffic Trunks to the Wireline LEC

A cellular carrier will have trunks connecting its switching center to the switching center of the local wireline carrier. These trunks are sized to match peak-hour traffic. It is reasonable to allocate the costs of these trunks to usage. Such costs can be compared to the costs of wireline interoffice transport—which is also allocated to usage.

[20] Cell splitting may occur to improve service quality or coverage. For example, if lost calls often occur on a stretch of highway between two cells, an intermediate cell may be added to provide improved coverage in the area where the calls are often lost.

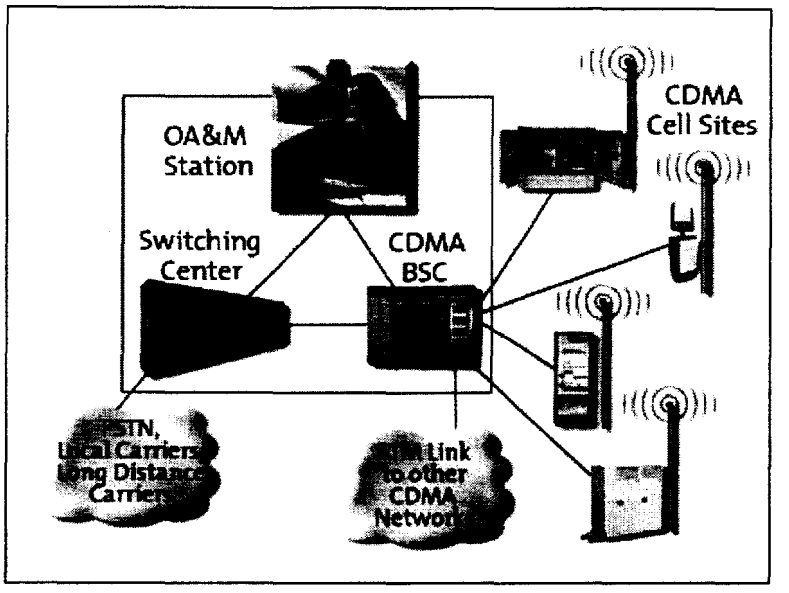

Figure 4 **CDMA System Diagram from Nortel**

IV. CLASSIFICATION OF WIRELESS INFRASTRUCTURE COSTS

With this introduction to the principles of classifying wireless system costs into option and usage costs, we will now turn to a detailed examination of the costs of a modern CDMA PCS system and the proper classification of those costs. The Figure above shows a diagram of a CDMA wireless system. We attempted to follow, as much as possible, the notation and usages from the CRA study. We divide the wireless system infrastructure into the following elements: Switching Center (SC), Base Station Controller(s) (BSC), Backhaul, Signalling, Base Transceiver System (BTS), and Structure and Antennas. Our discussion here is somewhat illustrative. For example, we collocate the wireless switch with the HLR and the authentication center at the switching center. Such collocation need not be the case. If the MSC and HLR are not collocated, then the cost of the communications link between the MSC and the HLR is incurred, at least in part, to provide the option for calling.

1. Switching Center

The switching center contains the Mobile Switching Center (MSC). In the analog cellular world, the MSC was known as the mobile telephone switching office (MTSO). Also

located at the switching center are the Equipment Identity Register (EIR), the Home Location Register (HLR), the Visitor Location Register (VLR), and the Authentication Center (AC).

The MSC must be connected to other switches to exchange both voice traffic (traffic channels) and control information (signalling channels). The MSC is also connected to the BSCs, the HLR, and the VLR. The HLR is connected to both the MSC and the AC. The Figure above illustrates this architecture, which follows the reference model in IS-41. The MSC is the mobile switch. It controls the process of call setup, routes traffic to the appropriate cells, and controls the process of taking down calls. It also maintains the HLR and VLR entries for handheld units.

2. Signalling system

The MSC is connected to other switches both wireless and wireline using Signalling System 7 (SS#7) in order to exchange control information. For example, when a handset attempts to register in a distant wireless system, that wireless system sends a message to the handset's home system, to obtain the information necessary to verify the validity of the handset identification information and other functions. Similarly, when an incoming call comes from a wireline carrier, the wireline carrier sends information about the call to the wireless carrier over the signalling system. Such communications between wireless systems are essential in limiting fraud.

3. BSC

The BSC provides many of the functions one normally associates with a base station.[21] For example, it is the entity that formats messages to handheld units directing them to change from one base station to another. The BSC manages handset registration, call setup, and handoff, among other functions.

[21] For a description of a BSC, see http://www.ericsson.se/cdmasystems/bsc_home.shtml.

4. Backhaul

The BSCs are connected to the BTSs (the radio equipment at the cells sites) through transmission systems. These transmission systems are called Backhaul Systems because they carry traffic back from the cell sites to the wireless network. Typically backhaul systems run from the cell sites to BSCs. Backhaul circuits carry the information used for registration of handheld and other control functions as well as the voice traffic to and from each cell.

Some backhaul costs must be incurred to support registration and other administrative functions. Typically, backhaul capacity comes in lumps such as the DS-1 service, available from many carriers, that provide a payload of 1.536 Mbit/sec. Microwave systems usually deliver more capacity than this. A typical low-capacity microwave system delivers about 6 Mbit/sec.

CDMA systems represent speech in a compressed form that occupies about 6,000 bits per second (on average) for an active speaker. Thus, a DS-1 with 1.5 Mbit/sec of capacity can carry about 250 conversations. For practical purposes, it is more appropriate to reserve capacity for the administrative functions and leave some headroom to accommodate statistical fluctuations in the capacity needed for each speech signal. But, it is reasonable to expect a DS-1 to support about 200 active conversations. Putting it another way, if a DS-1 must be installed to support service administration traffic between the cell site and the base station, its capacity will not be exhausted until the cell is capable of supporting more than 200 conversations.

5. BTS

The Base Transceiver System consists of radio amplifiers, a radio front end, control subsystems, and channel modulator/demodulator elements. For information on some specific BTS products see http://www.nortelnetworks.com/products/01/cdma/base_portfolio.html#rural, http://www.ericsson.se/cdmasystems/bsc_home.shtml, or http://www.motorola.com/NSS/Technology/CDMA.html.

A minimal BTS capability is required in each cell if the cell is to be able to transmit the pilot tone, register handsets, and perform other housekeeping tasks that are necessary before any calls can be completed.

6. Structure and Antennas

Typically, base stations require enclosures, connections to electrical power, a tower, antennas, and waveguide to carry the radio frequency signal between the BTS and the antennas. The registration function and other housekeeping functions cannot be performed without the structure and antennas. Consequently, these items are necessary to provide the option of communications. The cost of Structure and Antennas associated with coverage cells does not vary with usage. Hence, these costs are option costs.

B. Wireless Cost Classification in Summary

The table below displays the division of infrastructure costs between option costs and usage costs.

TABLE 2
Wireless Cost Classification

System Element	Option Cost	Usage Cost
Message Switching Center	Yes	Partially
Home Location Register	Yes	Partially
Visitor Location Register	Yes	Partially
Authentication Center	Yes	Partially
Equipment Identify Register	Yes	Partially
Signalling (SS#7)	Yes. SS#7 connectivity is used to support roaming services and intersystem handoff.	Partially. If SS#7 capacity has to be expanded over minimal levels to support the signalling needs of usage, then this incremental element is a usage cost.
Base Station Controller (BSC)	BSCs are necessary to support the option of calling.	Marginally
Backhaul	A minimal backhaul connection	Marginally. Any increase over

	to each coverage cell or coverage cell equivalent is required in order to provide the option of calling.	the minimum level (e.g., the cost of more than one DS-1 to cells serving many voice channels) is a usage cost.
Base Tranceiver System (BTS)	A minimal BTS with forward pilot channel, forward synch channel, and a reverse access channel is require to permit handsets to register for service in each cell. In addition, if the equipment manufacturer provides traffic channels bundled with the required minimum capacity, then those bundled traffic channels are part of the option costs.	Any addition to BTS capacity required to carry traffic above that carried by the minimum configuration. Similarly, all the added costs created by cell splitting to meet traffic demands.
Structure and Antennas	Option costs if for coverage cells	Any added costs for Structure and Antennas needed because of cell splitting to meet traffic demands

A simple model with reasonable parameters shows that the majority of costs in a modern wireless system are NTS costs. Consider a wireless system with 10,000 cells.[22] Assume that 700 of these cells are coverage cells and that 300 of the cells have been expanded to provide capacity as well as coverage. Assume that the average cost of a coverage cell is $750,000 and that the cost of a capacity-expanded cell is $1,000,000—of which $500,000 is allocated to capacity expansion and $500,000 is allocated to coverage. Assume further that backhaul costs and MSC costs divide in the same ratio as cell-site costs. In this model, total costs are more than $8 billion of which 90% are option or NTS costs.[23]

[22] Sprint reported in its 1999 SEC form 10K that it had approximately 14,400 cell sites under lease or option to lease at year-end 1999.

[23] Sprint has the data needed to provide a more refined version of this model. We note that the CRA authors did not use any quantitative information about the Sprint network in presenting their views.

C. Radio Spectrum Costs

Many wireless carriers, such as Sprint, obtained most or all of their licenses through the FCC's auctions or by purchase from entities that purchased licenses at these auctions.[24] CRA argues that the cost of these licenses is a TS cost. This view is flawed. The radio licenses are analogous to coverage cells—neither the voice services nor the other wireless services can be provided without the radio licenses. If a wireless operator is using the IS-95 technology used by Sprint, then that operator needs at least 2.5 MHz of spectrum just to provide the option of service. That is, the wireless operator cannot even turn on the Pilot Channel and accept registration traffic unless it has access to 2.5 MHz. In this case, the wireless equivalent of dial tone requires 2.5 MHz.

The FCC licensed PCS in two size blocks—10 MHz and 30 MHz. Thus, in order to be in the PCS business—to have the 2.5 MHz minimum—Sprint had to buy at least a 10 MHz license is needed. The cost of the 10 MHz license no more varies with usage than does the cost of a coverage cell. In contrast, there is a tradeoff between infrastructure costs and spectrum. In some circumstances, the wireless carrier's infrastructure costs will be lower if the carrier has access to more radio spectrum. This economic tradeoff permits placing a value on the 30 MHz licenses. Consider a wireless system built in an urban area with a 30 MHz license. Compare the cost of that system to a hypothetical system providing the same capacity and coverage, but engineered to fit into only 10 MHz of spectrum. The added costs of the 10 MHz system over the costs of the 30 MHz system reflect the savings from the added spectrum.

We note that Dr. David Reed of the FCC's Office of Plans and Policy studied the costs of PCS systems and the cost savings associated with additional spectrum.[25] He generally concluded that PCS systems would not require more than about 20 MHz of spectrum. We doubt if there are many cells in the Sprint network where all 30 MHz are occupied by PCS

---

[24] Two of Sprint's PCS licenses (Washington DC and Los Angeles) were granted through the FCC's Pioneers Preference policy.

[25] See **Putting It All Together: The Cost Structure of Personal Communications Services,** by David P. Reed; November 1992. NTIS PB93 114882;

signals. We expect that there are many cells in the Sprint network where only 2.5 MHz of spectrum is occupied by PCS signals.

V. CONCLUSIONS

The fundamental claim of the CRA authors is that wireless systems have a simple cost structure—handsets are NTS, everything else is TS. It would be hard to be more wrong. Handsets have significant TS costs (not borne by the carrier). The infrastructure network has massive NTS costs—a simple model indicates that the vast majority of the infrastructure costs are NTS costs. Sprint has bought a lot of radio spectrum—which it needs in order to offer the wireless equivalent of dial tone—and much of which will be used to provide wireless Internet access and other future services.

Moreover, efficiency considerations generally favor symmetric *reciprocal compensation* for interconnecting carriers based on the forward-looking cost (TELRIC) of an efficient firm. We disagree with Sprint's argument that differences in technology or service quality justify asymmetric rates. In general, differences in technology or service quality do not generate legitimate differences in costs for the purpose of setting asymmetric compensation rates. Compensating carriers that have different technological characteristics or provide different service qualities at the same rate as that of a fully-efficient firm using least-cost technology and providing an average service quality <u>will not</u> discourage these carriers from deploying their networks. Economic efficiency is achieved if the additional costs incurred to provide this different type of service are recovered from the agent that causes those costs to be incurred.

CERTIFICATE OF SERVICE

I, Gail Talmadge, do hereby certify that copies of the foregoing *Reply Comments of the United States Telecom Association* were served this 13h day of June, 2000, by hand delivery or postage paid, first class mail to the following parties:

The Honorable William E. Kennard
Chairman
Federal Communications Commission
445 12th Street, SW
Washington, DC 20554

The Honorable Harold Furchtgott-Roth
Commissioner
Federal Communications Commission
445 12th Street, SW
Washington, DC 20554

The Honorable Susan Ness
Commissioner
Federal Communications Commission
445 12th Street, SW
Washington, DC 20554

The Honorable Gloria Tristani
Commissioner
Federal Communications Commission
445 12th Street, SW
Washington, DC 20554

The Honorable Michael K. Powell
Commissioner
Federal Communications Commission
445 12th Street, SW
Washington, DC 20554

Ms. Magalie Roman Salas, Secretary
Federal Communications Commission
445 12th Street, SW
Washington, DC 20554

Mr. Stacy Jordan, Policy Division
Wireless Telecommunications Bureau
Federal Communications Commission
445 12th Street, SW – Room 3-A431
Washington, DC 20554

Ms. Wanda Harris
Competitive Pricing Division
Common Carrier Bureau
Federal Communications Commission
445 12th Street, SW – Room 5-A452
Washington, DC 20554

Mr. Lawrence Strickling, Chief
Common Carrier Bureau
Federal Communications Commission
445 12th Street, SW
Washington, DC 20554

ITS
1231 20th Street, NW
Washington, DC 20036

Jonathan M. Chambers
Sprint PCS
401 9th Street, NW – Suite 400
Washington, DC 20004

Alpine PCS, Inc.
c/o Cole, Raywid & Braverman, LLP
1919 Pennsylvania Avenue, NW, Suite 200
Washington, DC 20006

AT&T
c/o Mark C. Roseblum
Stephen C. Gravito
Teresa Marrero
Room 1131M1
295 North Maple Avenue
Basking Ridge, NJ 07920

Douglas I. Brandon
AT&T Wireless Services, Inc.
1150 Connecticut Avenue, NW #400
Washington, DC 20036

Howard J. Symons
Sara F. Seidman
Paula Deza
Ghita Harris-Newton
Mintz, Levin, Cohn, Ferris,
Glovssky and Popeo, PC
701 Pennsylvania Avenue, NW #900
Washington, DC 200004

M. Robert Sutherland
BellSouth Corporation
1155 Peachtree Street, NE
Suite 1800
Atlanta, GA 30309

Michael F. Altschul
Randall S. Coleman
Cellular Telecommunications
Industry Association
1250 Connecticut Avenue, NW #800
Washington, DC 20036

Cellular XL Associates, LP
c/o Christine M. Crowe
Paul, Hastings, Janofsky
& Walker, LLP
1299 Pennsylvania Avenue, NW
Tenth Floor
Washington, DC 20004

Centennial Communications Corp.
c/o Karlyn Stanley
Brenda J. Boykin
Cole, Raywid & Braverman, LLP
1919 Pennsylvania Avenue, NW #200
Washington, DC 20006-3458

GTE
c/o Gregory J. Vogt
Christopher Guttman-McCabe
Wiley, Rein & Fielding
1776 K Street, NW
Washington, DC 20006

Thomas R. Parker
GTE Service Corporation
600 Hidden Ridge, MS HQ-EO3J43
P.O. Box 152092
Irving, TX 75015-2092

Andre J. Lachance
GTE Service Corporation
1850 M Street, NW #1200
Washington, DC 20036

Metrocall, Inc.
Frederick M. Joyce
Christine McLaughlin
Alston & Bird, LLP
601 Pennsylvania Avenue, NW
North Building – 11th Floor
Washington, DC 20004-2601

Robert L. Hoggarth
Angela E. Giancarlo
Personal Communications Industry Assoc.
500 Montgomery Street – Suite 700
Alexandria, VA 22314

Rural Telecommunications Group
c/o Caressa D. Bennet
Robin E. Tuttle
Bennet & Bennet, PLLC
1000 Vermont Avenue, NW
Tenth Floor
Washington, DC 20005

John H. Harwood, II
Lynn r. Charytan
Jonathan Frankel
Mary E. Kostel
Wilmer, Cutler & Pickering
2445 M Street, NW
Washington, DC 20037

Robert B. McKenna
Jeffry A. Brueggeman
U.S. WEST, INC.
1020 19th Street, NW
Washington, DC 20036

Brian Thomas O'Connor
Robert Calaff
VoiceStream Wireless Corporation
1300 Pennsylvania Avenue, NW #700
Washington, DC 20004

Douglas G. Bonner
Sana D. Coleman
Arent Fox Kintner Plotkin & Kahn, PLLC
1050 Connecticut Avenue, NW
Washington, DC 20036

Gene DeJordy
Western Wireless Corporation
3650 131st Avenue, SE
Bellevue, WA 98006

Russell M. Blau
Michael C. Sloan
Swindler Berlin Shereff-Friedman, LLP
3000 K Street, NW – Suite 300
Washington, DC 20007-5116

Gail Talmadge

Gail Talmadge