ORIGINAL

RECEIVED

AUG 8 2000

FEDERAL COMMUNICATIONS COMMISSION
OFFICE OF THE SECRETARY

BELLSOUTH
EX PARTE OR LATE FILED

BellSouth
Suite 900
1133-21st Street, N.W.
Washington, D.C. 20036-3351

kathleen.levitz@bellsouth.com

Kathleen B. Levitz
Vice President-Federal Regulatory

202 463-4113
Fax 202 463-4198

August 8, 2000

RECEIVED

AUG 8 2000

FEDERAL COMMUNICATIONS COMMISSION
OFFICE OF THE SECRETARY

WRITTEN EX PARTE

Ms. Magalie Roman Salas
Secretary
Federal Communications Commission
The Portals
445 12th Street, S.W., Room TWB-204
Washington, D.C. 20554

Re: CC Docket No. 98-147

Dear Ms. Salas:

Attached is a set of the diagrams illustrating different topologies that BellSouth proposes to use to provide physical collocation at remote terminals. Copies of these diagrams have also been sent to the following Commission staff: Kathy Farroba; Jessica Rosenworcel; John Stanley; and Chris Libertelli.

In accordance with Section 1.1206(b)(1), I am filing two copies of this notice in the docket identified above. If you have any questions concerning this, please call me.

Sincerely,

Kathleen B. Levitz

Kathleen B. Levitz

Attachment

cc: Kathy Farroba
Jessica Rosenworcel
John Stanley
Chris Libertelli

No. of Copies rec'd 0+2
List A B C D E

Physical RT Collocation with Line Sharing Functional Block Diagram

7/17/00

DRAFT

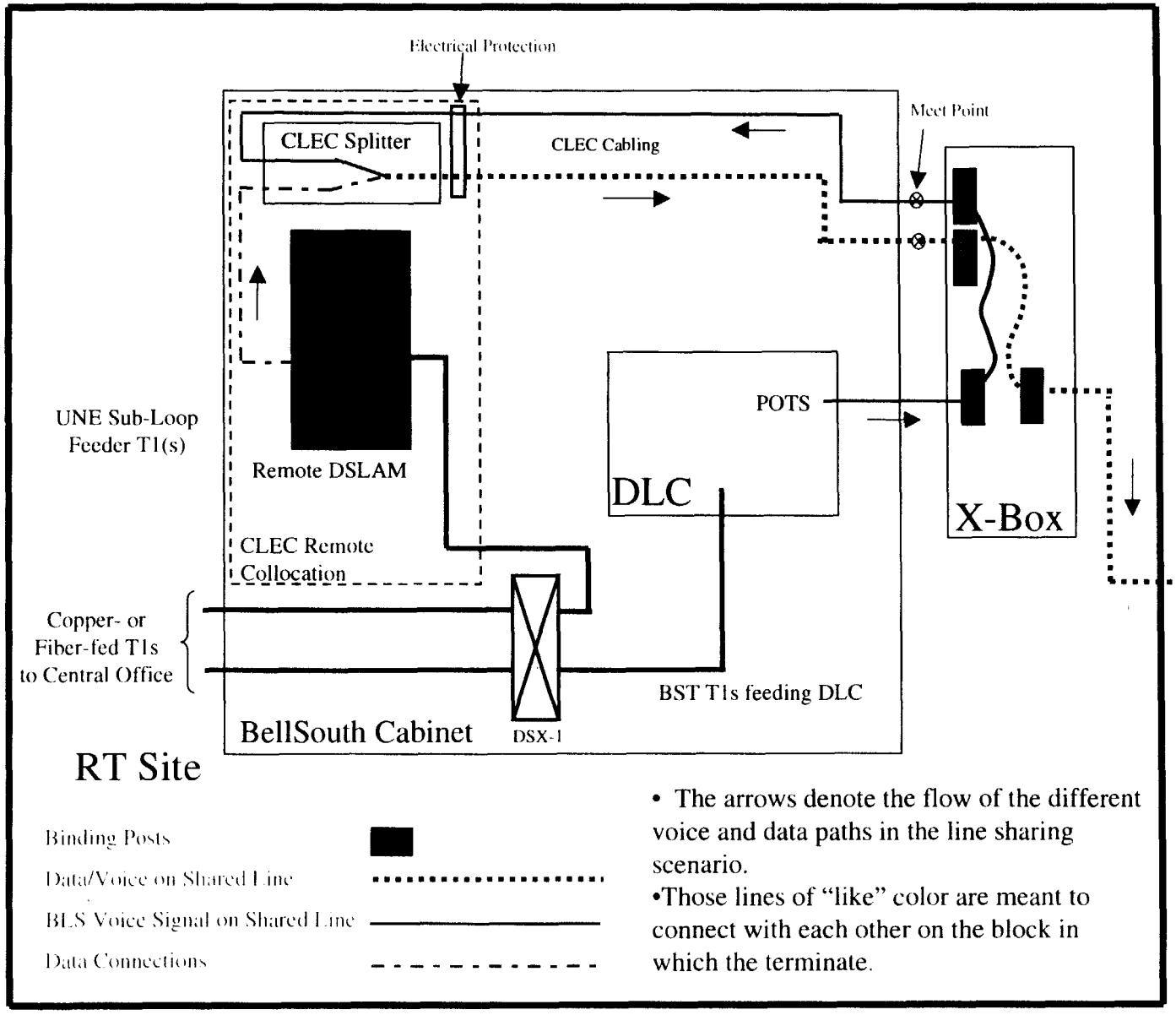

Line Sharing with
BLS Voice and DLEC
Data to the end user

NID

- The arrows denote the flow of the different voice and data paths in the line sharing scenario.
- Those lines of "like" color are meant to connect with each other on the block in which the terminate.

Physical RT Collocation with UNE Loop Functional Block Diagram

7/17/00

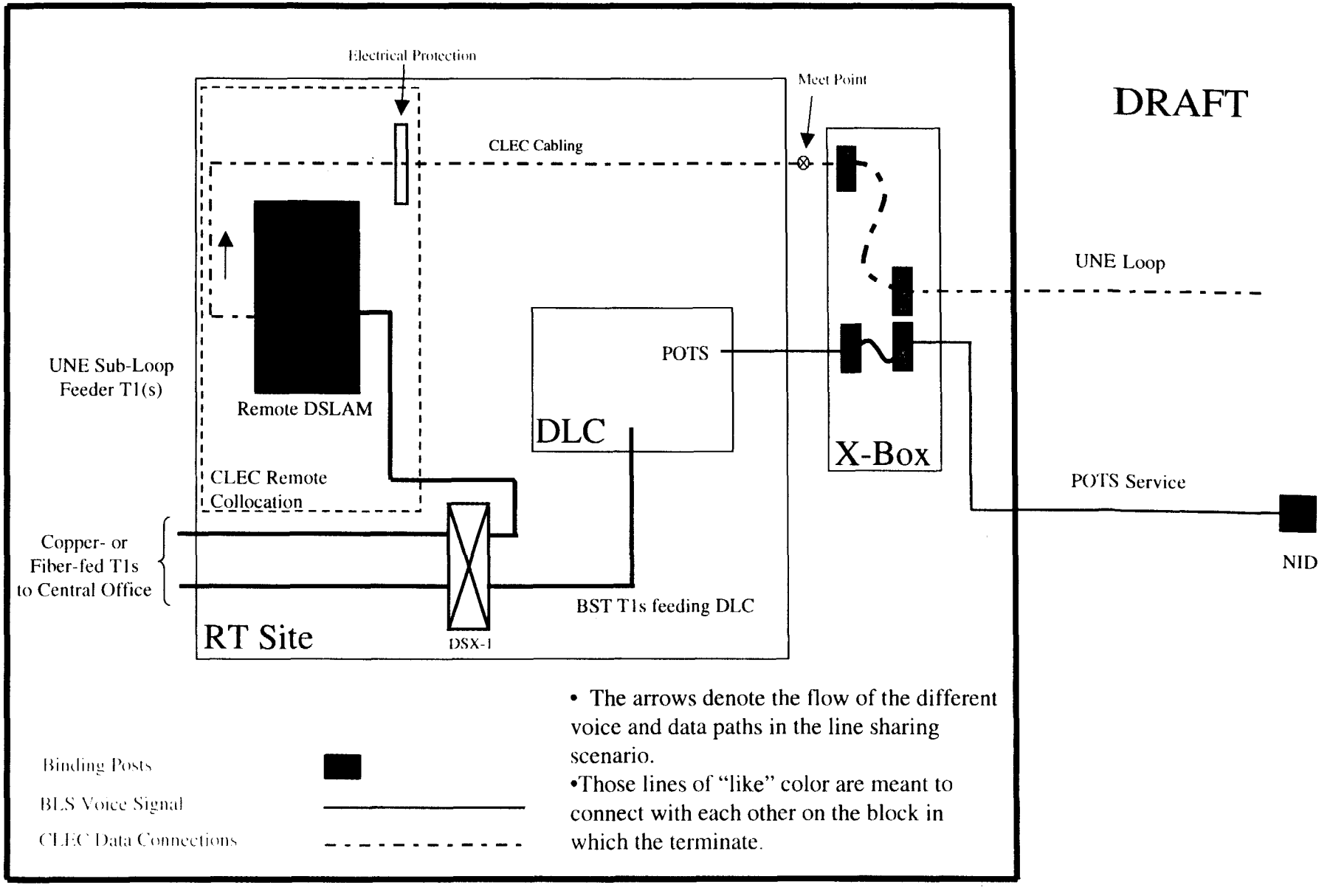

- The arrows denote the flow of the different voice and data paths in the line sharing scenario.
- Those lines of "like" color are meant to connect with each other on the block in which the terminate.

Physical RT Collocation with Line Sharing Functional Block Diagram

7/17/00

DRAFT

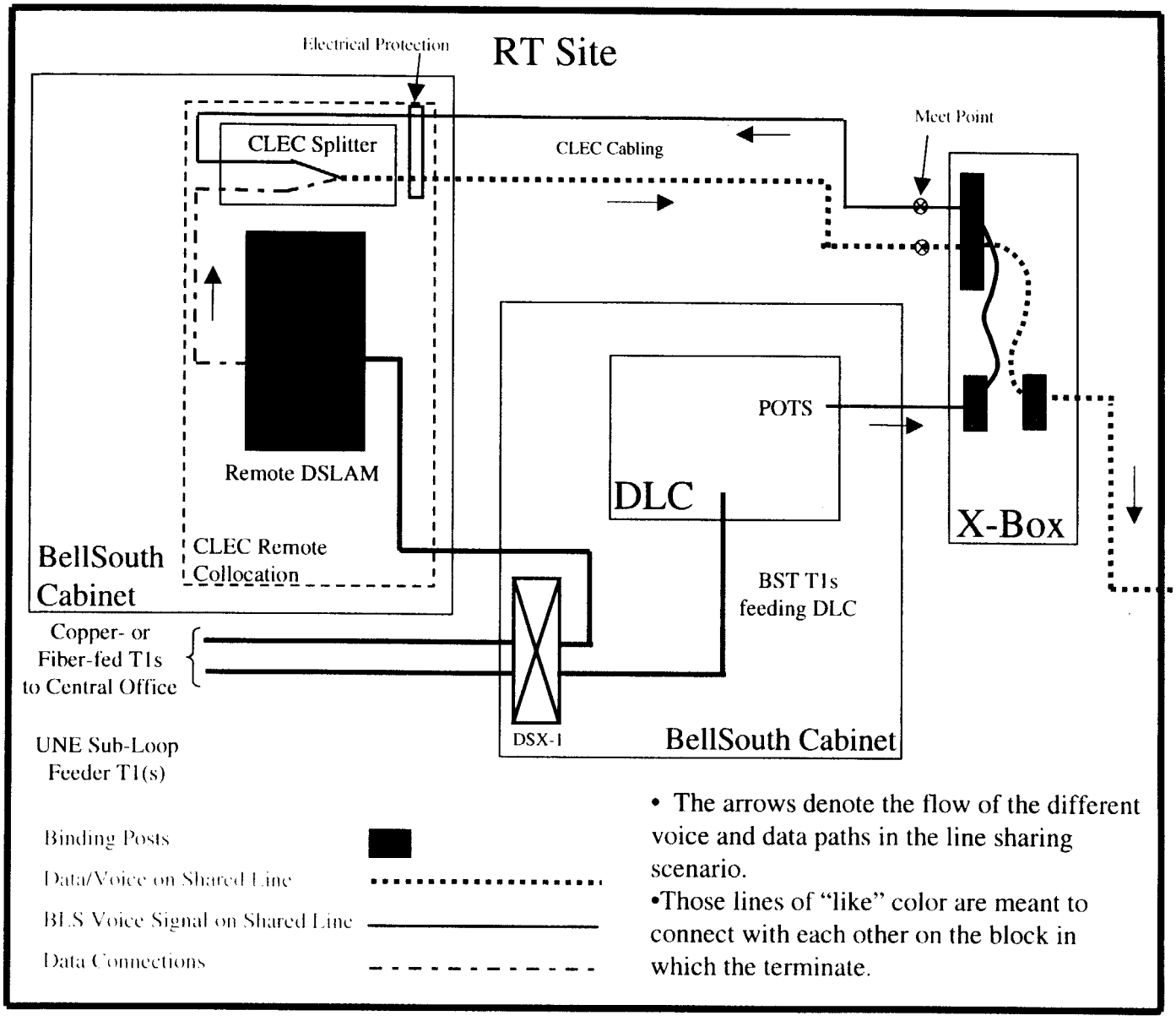

- The arrows denote the flow of the different voice and data paths in the line sharing scenario.
- Those lines of "like" color are meant to connect with each other on the block in which the terminate.

Physical RT Collocation with UNE Loop Functional Block Diagram

7/17/00

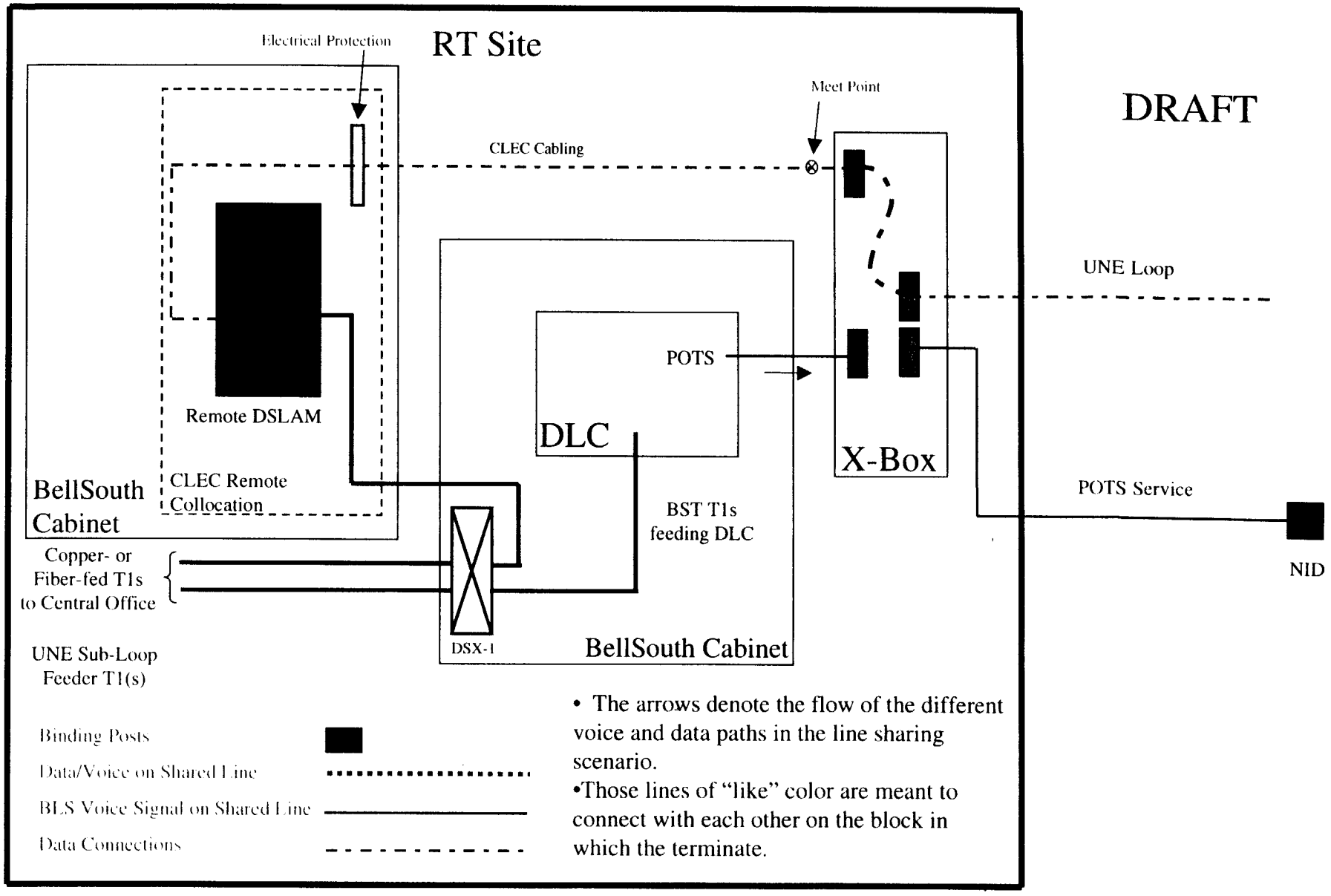

DRAFT

- The arrows denote the flow of the different voice and data paths in the line sharing scenario.
- Those lines of "like" color are meant to connect with each other on the block in which the terminate.

Adjacent RT Collocation with Line Sharing Functional Block Diagram

7/17/00

DRAFT

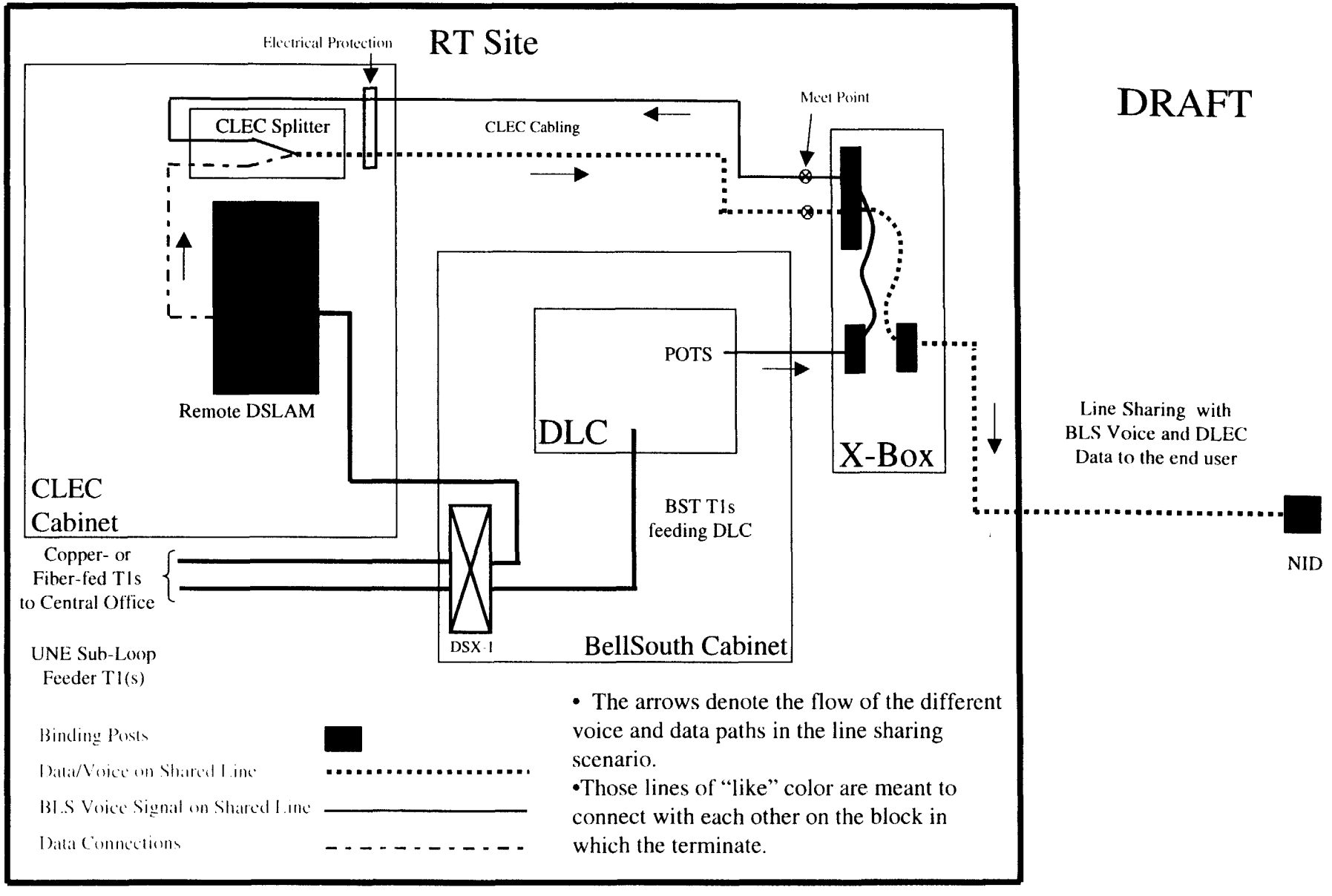

- The arrows denote the flow of the different voice and data paths in the line sharing scenario.
- Those lines of "like" color are meant to connect with each other on the block in which the terminate.

Adjacent RT Collocation with UNE Loop Functional Block Diagram

7/17/00

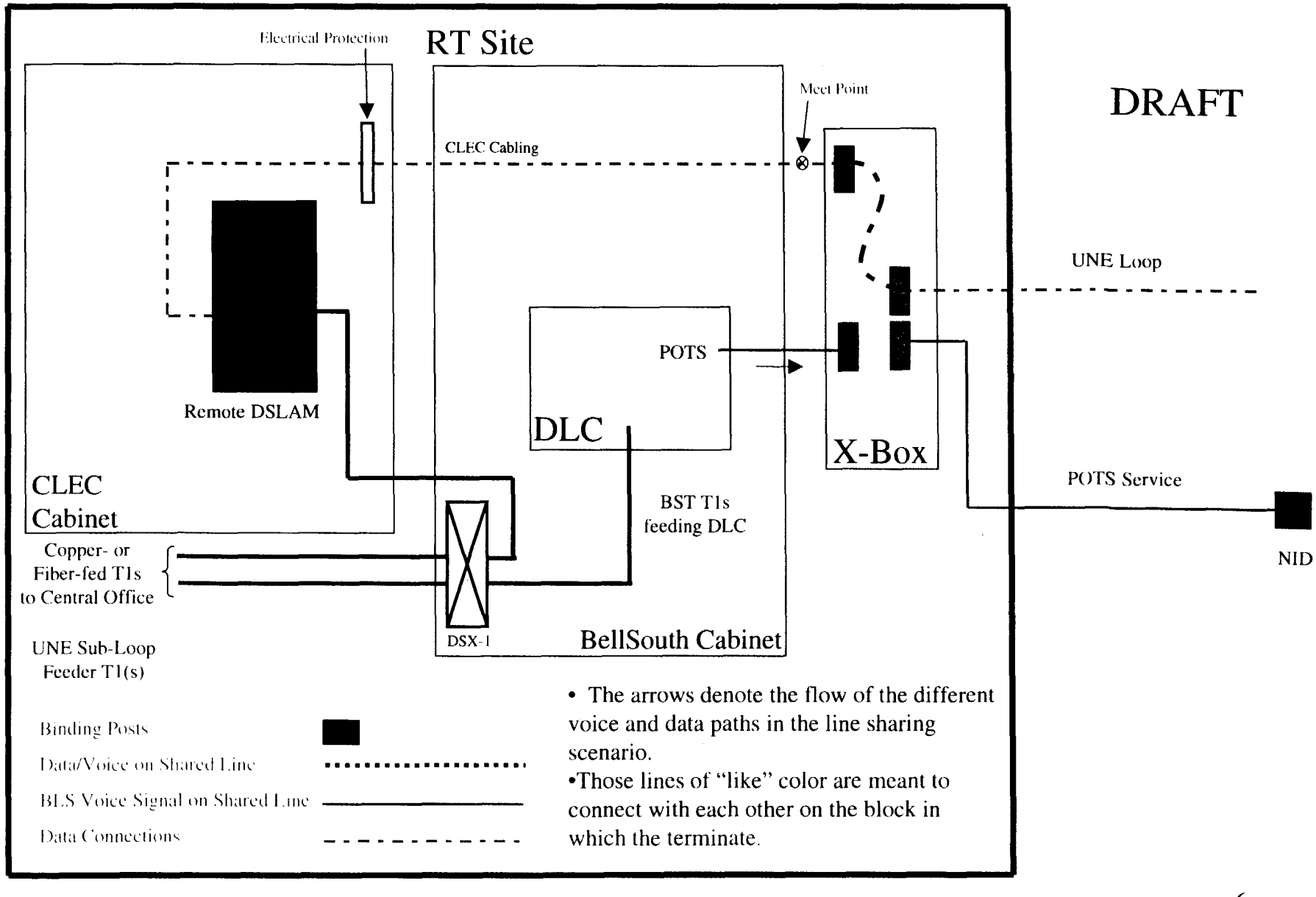

- The arrows denote the flow of the different voice and data paths in the line sharing scenario.
- Those lines of "like" color are meant to connect with each other on the block in which the terminate.

Virtual RT Collocation with Line Sharing Functional Block Diagram

7/17/00

DRAFT

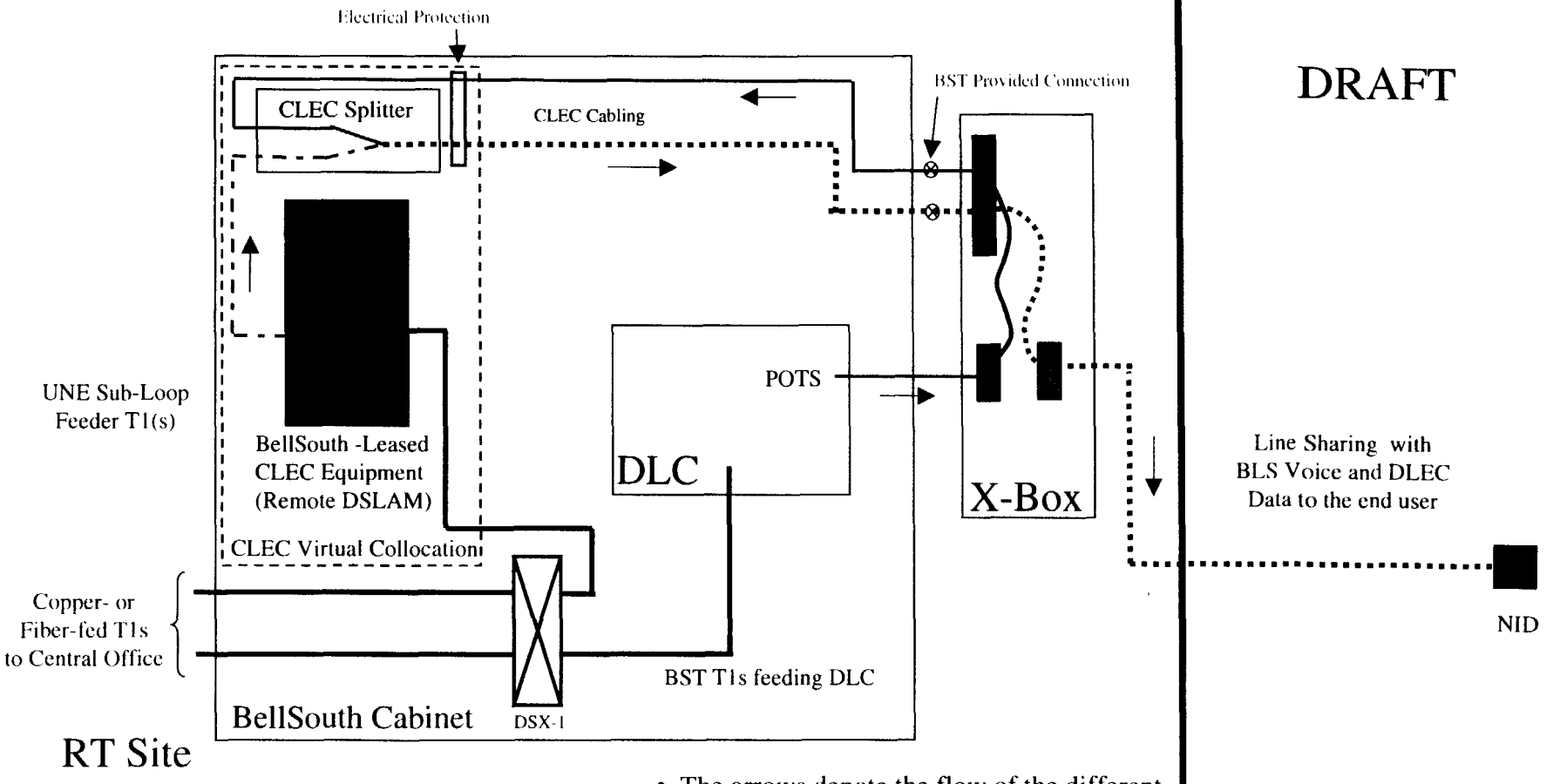

Binding Posts

Data/Voice on Shared Line

BLS Voice Signal on Shared Line

Data Connections

- The arrows denote the flow of the different voice and data paths in the line sharing scenario.
- Those lines of "like" color are meant to connect with each other on the block in which the terminate.

Virtual RT Collocation with UNE Loop Functional Block Diagram

7/17/00

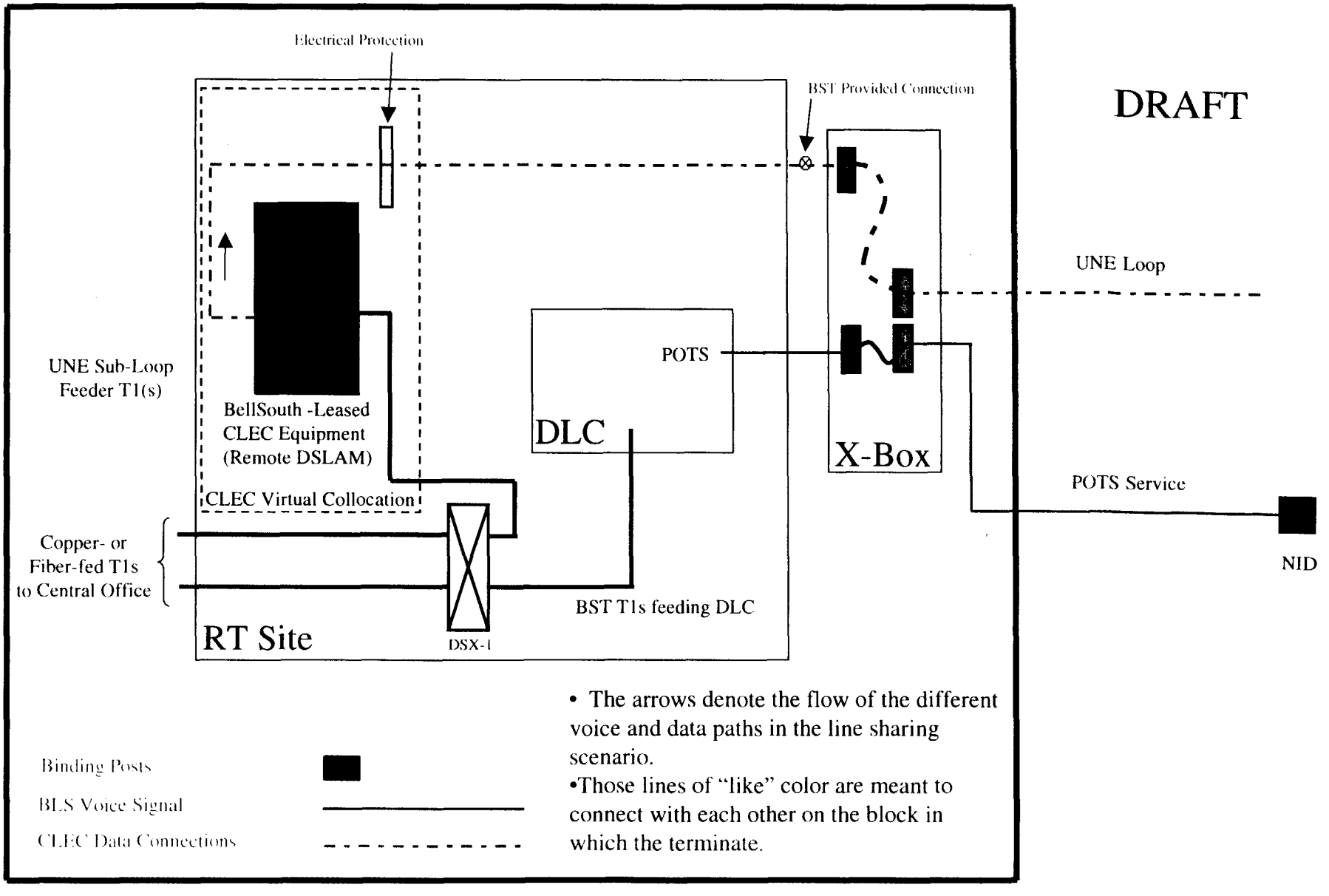

- The arrows denote the flow of the different voice and data paths in the line sharing scenario.
- Those lines of "like" color are meant to connect with each other on the block in which the terminate.