3. Category 3 - Dedicated Basic Serving Arrangement

A dedicated BSA provides an ESP with a dedicated point-to-point connection through the network. This category of serving arrangements are available full-time so that individual calls are not set up and taken down. This BSA is capable of supporting analog or digital signals at various transmission rates. The transmission interface may be 2-wire or 4-wire, or derived from a variety of multiplexing alternatives (for example, Digital Signal (DS) level 0 from DS level 1, or DS1 from DS3). It is also capable of providing supervisory signaling in some configurations.

Route diversity may be available with this serving arrangement.

3.1 Category 3, Type A - Dedicated Metallic BSA (1015)

Service Description

The Dedicated Metallic BSA provides a non-switched channel between the ESP and the ESP's client for the transmission of low speed varying signals at rates up to 30 baud. This service can only be provided where metallic facilities are available.

Metallic dedicated services are nonswitched services used for applications such as alarm, pilot wire protective relaying, and direct current (DC) tripping protective relaying. Interoffice metallic facilities will be limited in length to a total of five miles per channel. Metallic dedicated service (called MT1 in TR-NPL-000336 reference documentation) provides a metallic or equivalent pair between an end user and the service provider's point of termination.

Metallic dedicated service MT1 may have a second end user point of termination bridged to the first.

Generic Name of BSA	Regional Company BSA Name
Category 3, Type A - Dedicated Metallic BSA	BA - Dedicated Metallic NX - Dedicated - Metallic PB - Metallic Service SWB - Special Access - Metallic USW - Analog PLS - DCCS

Dedicated – Private Line – BSA

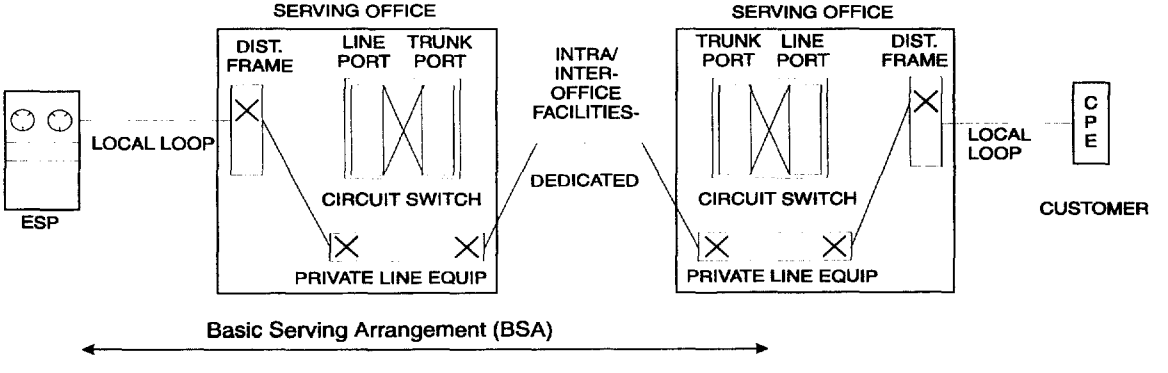

Alternatives

An alternative is an item that must be selected for the BSA to be technically meaningful. Alternative items may be available from some or all of the Local Exchange Carriers (LECs). Refer to the individual LEC tariff reference diskette for the reference information where LEC defined alternatives may be found. Examples of potential alternatives may be provision of services between customer designated premises through serving wire centers or between a customer designated premises and a telephone company hub.

Signaling

Metallic dedicated serving arrangements are available full-time and therefore signaling arrangements are not applicable.

Transmission

The subject of transmission covers a broad range of performance considerations related to the physical facilities that compose network architecture. Transmission parameters are designed to provide objective transmission performance characteristics, as perceived by the end user and LEC, between the points of termination. Transmission parameters are defined for each Network Interface (see below) supporting this BSA. These parameters are defined in the reference documentation.

Network Interfaces

The electrical interface with the LEC for metallic services is described by a Network Channel Interface (NCI) code for each end user termination and each service provider termination. NCI codes are provided to aid the user in understanding the relationship of the network interface to the electrical or optical characteristics of the interface. NCI codes have four basic components: (1) number of conductors (wire or fibers), (2) protocol code, (3) nominal reference impedance code, and (4) any applicable protocol options.

Reference

- TR-NPL-000336 Metallic and Telegraph Grade Special Access Service Transmission Parameter Limits and Interface Combinations, Issue 1, October 1987

3.2 Category 3, Type B - Dedicated Telegraph BSA (1016)

Service Description

The Dedicated Telegraph BSA provides a non-switched channel between the ESP and the ESP's client for the transmission of binary signals at rates of 0 to 75 baud or 0 to 150 baud.

Telegraph dedicated services are nonswitched services used for applications such as teletypewriter, telegraph grade control/remote metering, telegraph grade channel, telegraph grade extension, and telegraph grade entrance facilities. Certain applications must be provided using metallic facilities, and may only be offered where appropriate metallic facilities are available.

Telegraph Special Access services TG1 and TG2 may be available.

— TG1 service provides transmission of asynchronous transitions between two current levels at rates up to 75 baud between an end user and the ESP's point of termination. This service may be furnished for half-duplex or duplex operation in a two-point or multipoint configuration. Neither direct current (DC) continuity of this service nor the capability to continuously transport varying alternating current (AC) is assured.

— TG2 service provides transmission of asynchronous transitions between two current levels at rates up to 150 baud between an end user and the ESP's point of termination. This service may be furnished for half-duplex or duplex operation in a two-point or multipoint configuration. Neither DC continuity of this service nor the capability to continuously transport varying AC is assured.

Telegraph services TG1 and TG2 may have active or passive multipoint-bridging, the maximum number of bridges to be determined by service application design limitations.

Generic Name of BSA	Regional Company BSA Name
Category 3, Type B - Dedicated Telegraph BSA	BA - Dedicated Telegraph NX - Dedicated - Telegraph Grade PB - Telegraph Grade Service USW - Analog PLS - LSDS

Dedicated – Private Line – BSA

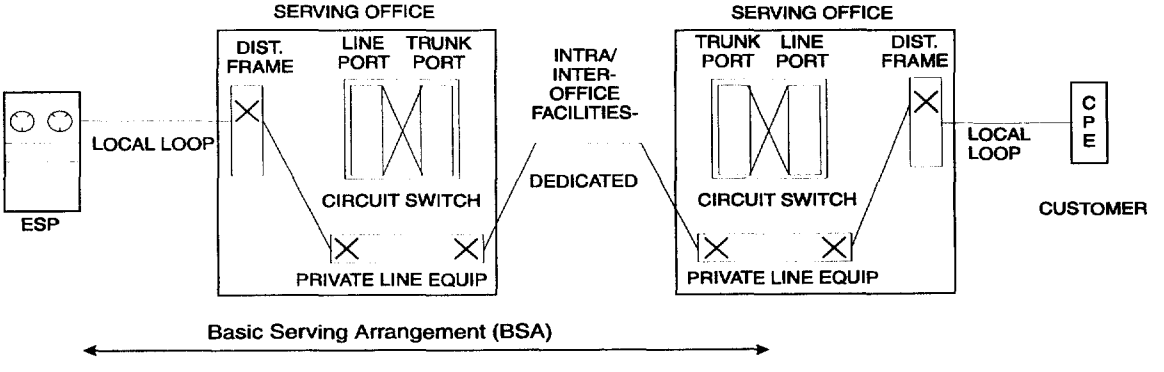

Alternatives

An alternative is an item that must be selected for the BSA to be technically meaningful. Alternative items may be available from some of all of the Local Exchange Carriers (LECs). Refer to the individual LEC tariff reference diskette for the reference information where LEC defined alternatives may be found. Examples of potential alternatives may be: half duplex or full duplex operation in a two-point or multipoint configuration.

Signaling

Telegraph dedicated serving arrangements are available full-time and therefore signaling arrangements are not applicable.

Transmission

The subject of transmission covers a broad range of performance considerations related to the physical facilities that compose network architecture. Transmission parameters are designed to provide objective transmission performance characteristics, as perceived by the end user and LEC, between the points of termination. Transmission parameters are defined for each Network Interface (see below) supporting this BSA. These parameters are defined in the reference documentation.

Network Interfaces

The electrical interface with the LEC for metallic services is described by a Network Channel Interface (NCI) code for each end user termination and each service provider termination. The NCI codes for the desired service must be specified by the customer when ordering telegraph grade services. NCI codes are provided to aid the user in understanding the relationship of the network interface to the electrical or optical characteristics of the interface. NCI codes have four basic components: (1) number of conductors (wire or fibers), (2) protocol code, (3) nominal reference impedance code, and (4) any applicable protocol options.

Reference

- TR-NPL-000336 Metallic and Telegraph Grade Special Access Service Transmission Parameter Limits and Interface Combinations, Issue 1, October 1987

3.3 Category 3, Type C - Dedicated Voice Grade BSA (1017)

Service Description

The dedicated voice grade BSA provides an ESP with a dedicated connection through the network to the ESP's client. This BSA is capable of supporting the transmission of analog signals within an approximate bandwidth of 300 - 3000 Hz. The transmission interface may be 2-wire or 4-wire. Voice grade services are provided between service provider designated premises through serving wire centers or between a service provider designated premises and a telephone company hub. It is capable of providing various supervisory signaling alternatives.

Generic Name of BSA	Regional Company BSA Name
Category 3, Type C - Dedicated Voice Grade BSA	AM - Direct Analog BA - Dedicated Voice-Grade BS - Dedicated - Private Line NX - Dedicated - Voice Grade PB - Voice Grade Service SWB - Special Access - Voice Grade USW - Analog PLS - VGS

Dedicated – Private Line – BSA

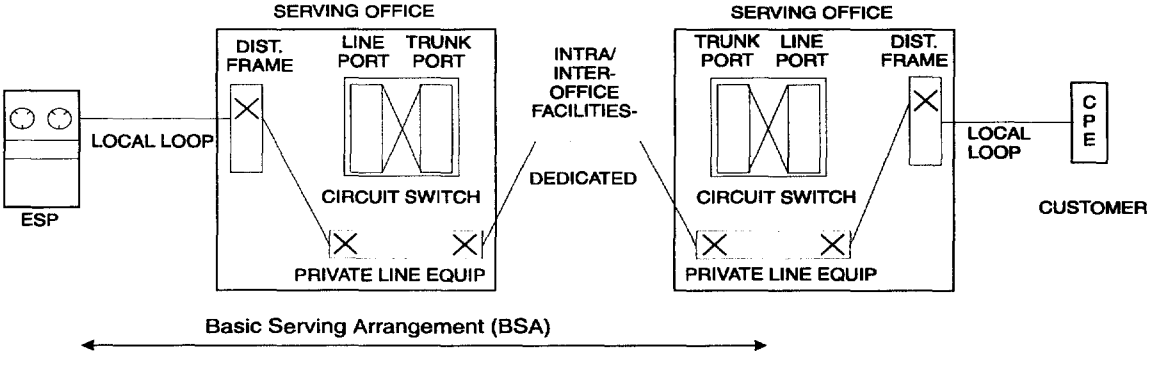

Alternatives

An alternative is an item that must be selected for the BSA to be technically meaningful. Alternative items may be available from some or all of the Local Exchange Carriers (LECs). Refer to the individual LEC tariff reference diskette for the reference information where LEC defined alternatives may be found. Examples of potential alternatives may be: transfer arrangement, improved termination, data capability, telephoto capability, and signaling capabilities.

Signaling

Signaling capability provides for the process by which one customer premises alerts another customer premises on the same service with which it wishes to communicate. These signals are the means by which the end user initiates a request for service, holds a connection or releases a connection. Examples of signaling arrangements are: loop-start, ground-start, E&M, and reverse-battery.

Transmission

The subject of transmission covers a broad range of performance considerations related to the physical facilities that compose network architecture. Transmission parameters are designed to provide objective transmission performance characteristics, as perceived by the end user and LEC, between the points of termination. Transmission parameters are defined for each Network Interface (see below) supporting this BSA. These parameters are defined in the reference documentation.

Network Interfaces

The electrical and physical interface with the LEC is described by a Network Channel Interface (NCI) code for each end user termination and each service provider termination. NCI codes are provided to aid the user in understanding the relationship of the network interface to the electrical or optical characteristics of the interface. NCI codes have four basic components: (1) number of conductors (wire or fibers), (2) protocol code, (3) nominal reference impedance code, and (4) any applicable protocol options.

References

- TR-NWT-000335 Voice Grade Special Access Services - Transmission Parameter Limits and Interface Combinations, Issue 3, May 1993

- TR-NWT-000965 IntraLATA Voice Grade Private Line Services Transmission Parameter Limits and Interface Combinations, Issue 1 - October 1989, Revision 1 - December 1989, Issue 2 - December 1991

- GR-342 High-Capacity Digital Special Access Service - Transmission Parameter Limits and Interface Combinations, Issue 1, December 1995 (replaces TR-INS-000342)

3.4 Category 3, Type D - Dedicated Program Audio BSA (1018)

Service Description

The dedicated program audio BSA provides an ESP with a one-way non-switched channel to the ESP's client that can pass an analog signal up to 15000 Hz. This serving arrangement is usually provided for transmission of music, but it is capable of voice and data within the band pass limits. Nominal frequency bandwidths for this serving arrangement are: 50 to 15000 Hz, 200 to 3500 Hz, 100 to 5000 Hz, 300 to 2500 Hz, or 50 to 8000 Hz.

Generic Name of BSA	Regional Company BSA Name
Category 3, Type D - Dedicated Program Audio BSA	AM - Dedicated Program Audio BA - Dedicated Program Audio BS - Dedicated Program Audio NX - Dedicated - Program Audio PB - Program Audio Service SWB - Special Access - Program Audio USW - Analog PLS - AS

Dedicated – Private Line – BSA

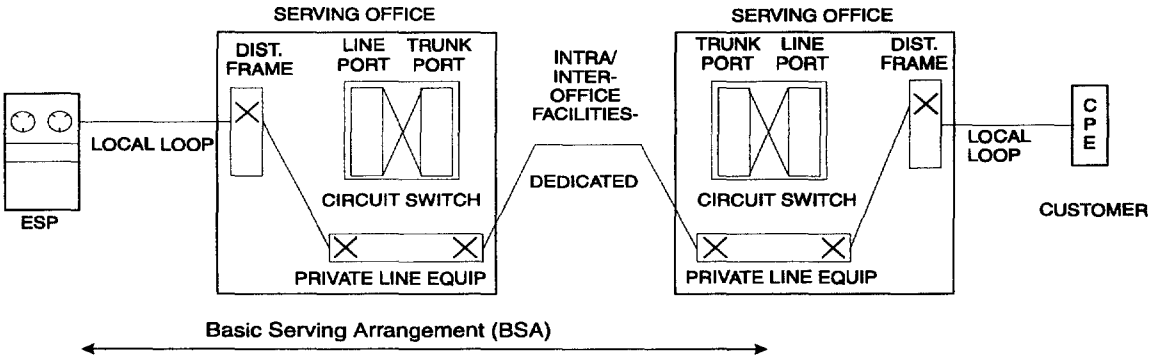

Alternatives

An alternative is an item that must be selected for the BSA to be technically meaningful. Alternative items may be available from some or all of the Local Exchange Carriers (LECs). Refer to the individual LEC tariff reference diskette for the reference information where LEC defined alternatives may be found. Examples of potential alternatives may be: stereo and gain conditioning.

Signaling

Program Audio services are available full-time and therefore signaling arrangements are not applicable.

Transmission

The subject of transmission covers a broad range of performance considerations related to the physical facilities that compose network architecture. Transmission parameters are designed to provide objective transmission performance characteristics, as

perceived by the end user and LEC, between the points of termination. Transmission parameters are defined for each Network Interface (see below) supporting this BSA. These parameters are defined in the reference documentation.

Network Interfaces

The electrical and physical interface with the LEC is described by a Network Channel Interface (NCI) code for each end user termination and each service provider termination. NCI codes are provided to aid the user in understanding the relationship of the network interface to the electrical or optical characteristics of the interface. NCI codes have four basic components: (1) number of conductors (wire or fibers), (2) protocol code, (3) nominal reference impedance code, and (4) any applicable protocol options.

References

- GR-337 Program Audio Special Access and Local Channel Services, Issue 1, December 1995 (replaces TR-NPL-000337, Issue 1)
- TR-TSY-000431 15 kHz Digital Audio Terminal for Program or Television Requirements and Objectives, Issue 1, October 1987
- GR-342 High-Capacity Digital Access Service - Transmission Parameter Limits and Interface Combinations, Issue 1, December 1995 (replaces TR-INS-000342, Issue 1)
- TR-NPL-000339 Wideband Analog Special Access Service - Transmission Parameter Limits and Interface Combinations, Issue 1, October 1987

3.5 Category 3, Type E - Dedicated Video BSA (1019)

Service Description

The dedicated video BSA provides an ESP with a dedicated, broadband communications channel to the ESP's client. Applications may include (but are not limited to): full-time and part-time commercial broadcast quality television, noncommercial broadcast quality television, video teleconferencing, distance-learning applications, surveillance, closed-circuit television. The channel is capable of transmitting a standard 525 line/60 field monochrome or National Television Systems Committee (NTSC) color video signal and associated audio signals. The associated audio signal(s) may be either duplexed or provided as separate channels. Video services are provided between customer designated premises through Serving Wire Center(s) or between a customer designated premises and a telephone company hub.

Generic Name of BSA	Regional Company BSA Name
Category 3, Type E - Dedicated Video BSA	AM - Dedicated Video
	BA - Dedicated Video Service
	BS - Dedicated Video
	NX - Dedicated - Video
	PB - Video Service
	SWB - Special Access - Video
	USW - Analog PLS - VS

Dedicated – Private Line – BSA

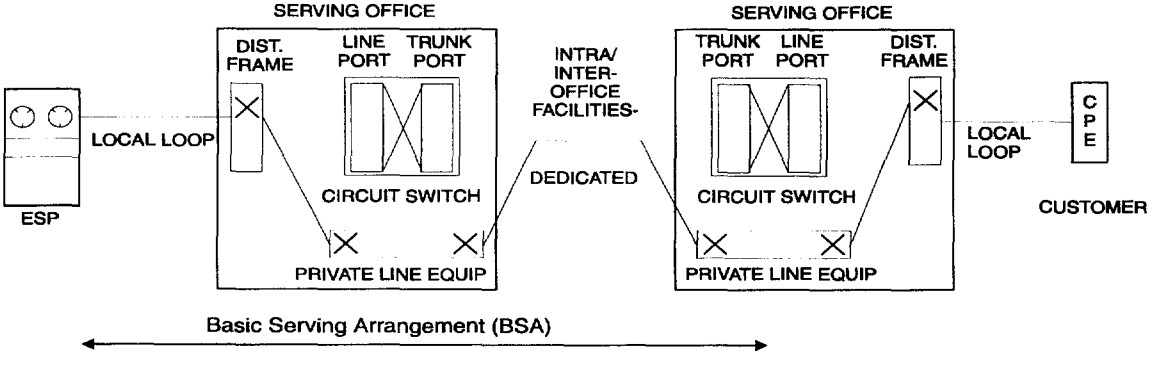

Alternatives

An alternative is an item that must be selected for the BSA to be technically meaningful. Alternative items may be available from some or all of the Local Exchange Carriers (LECs). Refer to the individual LEC tariff reference diskette for the reference information where LEC defined alternatives may be found. Examples of potential alternatives may be: 5 or 15 Hz audio channels, duplexed or separate channel audio signals, and video/audio delay difference.

Signaling

Video services are available full-time and therefore signaling arrangements are not applicable.

Transmission

The subject of transmission covers a broad range of performance considerations related to the physical facilities that compose network architecture. Transmission parameters are designed to provide objective transmission performance characteristics, as perceived by the end user and LEC, between the points of termination. Transmission parameters are defined for each Network Interface (see below) supporting this BSA. These parameters are defined in the reference documentation.

Network Interfaces

The electrical and physical interface with the LEC is described by a Network Channel Interface (NCI) code for each end user termination and each service provider termination. NCI codes define the bandwidth and the provision of the audio signal(s) associated with a broadcast video channel. NCI codes are: (1) Total Conductors, (2) Protocol, (3) Impedance, (4) Protocol Options, and (5) Transmission Level Point (ignored for Television Special Access).

References

- GR-338: Television Special Access and Local Channel Services - Transmission Parameter Limits and Interface Combinations, Issue 1, December 1995 (replaces TR-TSV-000338, Issue 2)
- TR-TSY-000431 15 kHz Digital Audio Terminal for Program or Television Requirements and Objectives, Issue 1, October 1987
- U S WEST Publication 77326 U S WEST Fiber Optic Commercial Video Services, Issue D, December 1994

3.6 Category 3, Type F - Dedicated Digital (< 64 kbps) BSA (1020)

Service Description

The dedicated digital (< 64 kbps) BSA provides an ESP with a 4-wire digital channel to the ESP's client This serving arrangement provides for digital transmission of synchronous serial data at primary rates of 2.4, 4.8, 9.6, 19.2, or 56 kbps, plus associated secondary channel rates of 2.4, 4.8, 9.6, 19.2, or 56 kbps. Error Detection/Correction is an inherent part of this BSA.

Digital Data special access services are nonswitched channels that provide the capability to transmit digital data between two end user points of termination or and end user point of termination and a service provider point of termination.

Generic Name of BSA	Regional Company BSA Name
Category 3, Type F - Dedicated Digital (< 64 kbps) BSA	AM - Ameritech Base Rate Services BA - Digital Data Service BS - SynchroNet® /DDS NX - Dedicated - Digital Data PB - Digital Data Service, Private Line Services SWB - Special Access - MegaLink℠ Data USW - Digital Data Service

Dedicated – Private Line – BSA

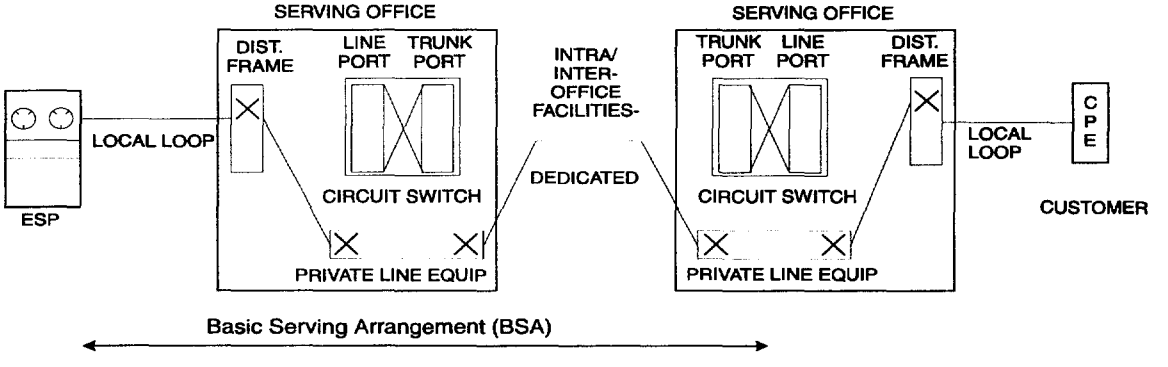

Alternatives

An alternative is an item that must be selected for the BSA to be technically meaningful. Alternative items may be available from some or all of the Local Exchange Carriers (LECs). Refer to the individual LEC tariff reference diskette for the reference information where LEC defined alternatives may be found. Examples of potential alternatives may be: Transfer Arrangement.

® SynchroNet is a registered service mark of BellSouth Corporation.

℠ MegaLink is a service mark of Southwestern Bell Telephone.

Signaling Arrangements

These services are available full-time and therefore supervisory signaling arrangements are not applicable. The signaling service is synchronous with timing provided through the LEC's facilities to the end user on the received bit stream. Individual calls are not set up and taken down.

Transmission Capabilities

The subject of transmission covers a broad range of performance considerations related to the physical facilities that compose network architecture. Transmission parameters are designed to provide objective transmission performance characteristics, as perceived by the end user and LEC, between the points of termination. Transmission parameters are defined for each Network Interface (see below) supporting this BSA. These parameters are defined in the reference documentation.

Network Interfaces

The electrical and physical interface with the LEC is described by a Network Channel Interface (NCI) code for each end user termination and each service provider termination. NCI codes are provided to aid the user in understanding the relationship of the network interface to the electrical or optical characteristics of the interface. NCI codes have four basic components: (1) number of conductors (wire or fibers), (2) protocol code, (3) nominal reference impedance code, and (4) any applicable protocol options.

References

- TR-NWT-000341 Digital Data Special Access Service Transmission Parameter Limits and Interface Combinations, Issue 2, February 1993
- U S WEST document 77312 U S WEST Digital Data Service, Technical Description, Issue D, October 1994

3.7 Category 3, Type G - Dedicated High Capacity Digital (1.544 Mbps) BSA (1021)

Service Description

The dedicated high capacity digital (1.544 Mbps) BSA provides an ESP with a dedicated channel. High Capacity Digital service is defined as a service that provides two-point, private-line, full duplex transmission at 1.544 Mbps isochronous serial data with a payload of 1.536 Mbps between an end user and an end user or between an end user and a LEC central office.

In some cases, this BSA can be provisioned for dedicated transport of Extended Superframe Format (ESF) datachannel capability.

Generic Name of BSA	Regional Company BSA Name
Category 3, Type G - Dedicated High Capacity Digital (1.544 Mbps) BSA	AM - Ameritech DS1 Services BA - High Capacity Digital Service BS - MegaLink® /HiCap NX - Dedicated Digital - 1.544 Mbps PB - High Capacity Services (1.544 Mbps) SWB - Special Access - High Capacity (1.544 Mbps) USW - DS1 Service

Dedicated – Private Line – BSA

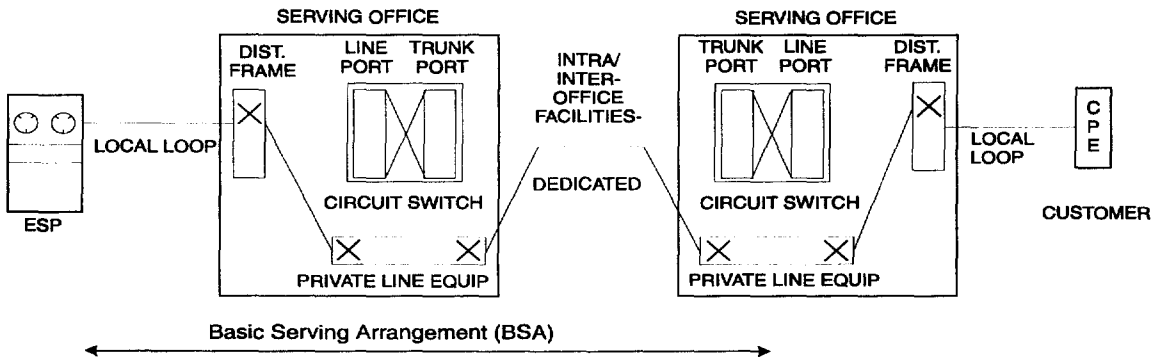

Alternatives

An alternative is an item that must be selected for the BSA to be technically meaningful. Alternative items may be available from some or all of the Local Exchange Carriers (LECs). Refer to the individual LEC tariff reference diskette

---

® MegaLink is a registered service mark of BellSouth Corporation.

for the reference information where LEC defined alternatives may be found. An example of a potential alternative may be: transfer arrangement.

Signaling

The signaling service is isochronous with timing provided through the LEC's facilities to the end user on the received bit stream. Individual calls are not set up and taken down.

Transmission

The subject of transmission covers a broad range of performance considerations related to the physical facilities that compose network architecture. Transmission parameters are designed to provide objective transmission performance characteristics, as perceived by the end user and LEC, between the points of termination. Transmission parameters are defined for each Network Interface (see below) supporting this BSA. These parameters are defined in the reference documentation.

Network Interfaces

The electrical and physical interface with the LEC is described by a Network Channel Interface (NCI) code for each end user termination and each service provider termination. NCI codes are provided to aid the user in understanding the relationship of the network interface to the electrical or optical characteristics of the interface. NCI codes have four basic components: (1) number of conductors (wire or fibers), (2) protocol code, (3) nominal reference impedance code, and (4) any applicable protocol options.

References

- GR-342 High-Capacity Digital Special Access Service - Transmission Parameter Limits and Interface Combinations, Issue 1, December 1995 (replaces TR-INS-000342, Issue 1)
- GR-54 DS1 High Capacity Digital Service End User Metallic Interface Specifications, Issue 1, December 1995 (replaces TR-NPL-000054, Issue 1)
- TR-TSY-000312 Functional Criteria for the DS1 Interface Connector, Issue 1, February 1988
- Ameritech document AM-TR-OAT-000033, DS1 Customer Installation: Metallic Interface, Issue B, January 1990
- Pacific Telesis technical reference PUB L-780021-PB/NB Requirements and Objectives for Network Interface Unit and Mounting, Issue 2, November 1994
- U S WEST engineering publication 77327 Digicom® III High Capacity Digital Access Service "Joint Designed" Network Channel Interface, December 1988

® Digicom is a registered trademark of U S WEST Communications, Inc.

3.8 Category 3, Type H - Dedicated High Capacity Digital (>1.544 Mbps) BSA (1022)

Service Description

The dedicated high capacity digital (>1.544 Mbps) BSA provides an ESP with a dedicated channel to the ESP's client via a digital facility. High Capacity Digital service is defined as a service that provides two-point, private-line, transmission at speeds above 1.544 Mbps between an end user and an end user or between an end user and a LEC central office. Individual calls are not set up and taken down. The ESP must specify the desired transmission speed as an alternative with this BSA.

Generic Name of BSA	Regional Company BSA Name
Category 3, Type H - Dedicated High Capacity Digital (>1.544 Mbps) BSA	AM - Ameritech DS3 Services BA - High Capacity/Lightwave Service BS - LightGate® /HiCap NX - Dedicated - Digital - 45 Mbps PB - High Capacity Services (>1.544 Mbps) SWB - Special Access - High Capacity MegaLink℠ Custom USW - DS3 Service

Dedicated – Private Line – BSA

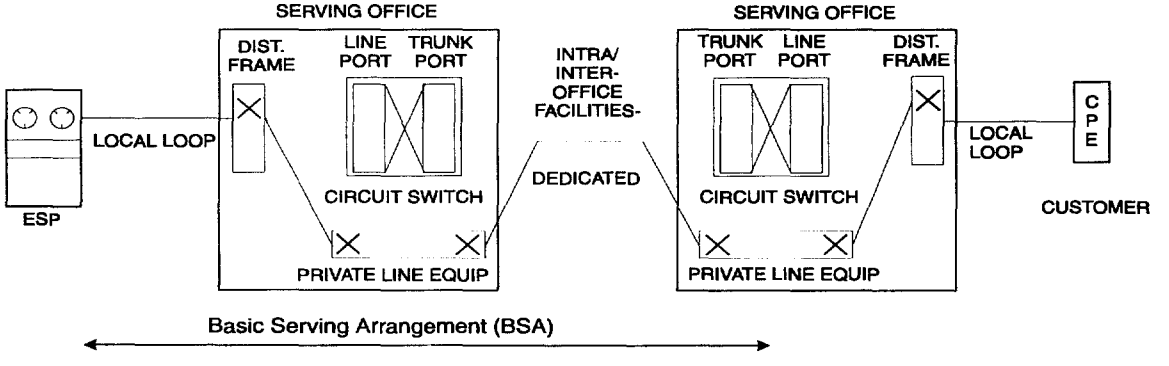

Alternatives

An alternative is an item that must be selected for the BSA to be technically meaningful. Alternative items may be available from some or all of the Local Exchange Carriers (LECs). Refer to the individual LEC tariff reference diskette for the reference information where LEC defined alternatives may be found. Examples of potential alternatives may be: transmission speed and transfer arrangement.

® LightGate is a registered service mark for BellSouth Corporation.

Signaling

The signaling service is isochronous with timing provided through the LEC's facilities to the end user on the received bit stream. Individual calls are not set up and taken down.

Transmission

The subject of transmission covers a broad range of performance considerations related to the physical facilities that compose network architecture. Transmission parameters are designed to provide objective transmission performance characteristics, as perceived by the end user and LEC, between the points of termination. Transmission parameters are defined for each Network Interface (see below) supporting this BSA. These parameters are defined in the reference documentation.

Network Interfaces

The electrical and physical interface with the LEC is described by a Network Channel Interface (NCI) code for each end user termination and each service provider termination. NCI codes are provided to aid the user in understanding the relationship of the network interface to the electrical or optical characteristics of the interface. NCI codes have four basic components: (1) number of conductors (wire or fibers), (2) protocol code, (3) nominal reference impedance code, and (4) any applicable protocol options.

References

- GR-342 High-Capacity Digital Special Access Service - Transmission Parameter Limits and Interface Combinations, Issue 1, December 1995 (replaces TR-INS-000342, Issue 1)
- U S WEST engineering publication 77327 Digicom® III High Capacity Digital Access Service "Joint Designed" Network Channel Interface, December 1988
- U S WEST publication 77324 U S WEST DS3 Service, Issue C, April 1993.

SM MegaLink is a service mark for Southwestern Bell Telephone.

® Digicom is a registered trademark of U S WEST Communications, Inc.

3.9 Category 3, Type I - Dedicated Alert Transport BSA (1023)

Service Description

The dedicated alert transport BSA using derived local channel technology and a LEC provided scanner offers ESPs a 24 hour supervised monitoring capability using compatible local loop access lines.

The scanner continuously monitors the status of all clients. A host processor monitors all scanners and, in response to a change in status, will identify the subscriber from which the alert condition originates and notify the appropriate ESP.

This serving arrangement utilizes derived channels which comply with Underwriter's Laboratories (UL) AA and National Fire Protection A and National Fire Protection Association (NFPA) requirements.

Generic Name of BSA	Regional Company BSA Name
Category 3, Type I - Dedicated Alert Transport BSA	BA - REACT[SM] BS - WATCHALERT® NX - PULSENET[SM] Alert Transport Service PB - POLLSTAR[SM] DLC Security Transport

Dedicated – Private Line – BSA

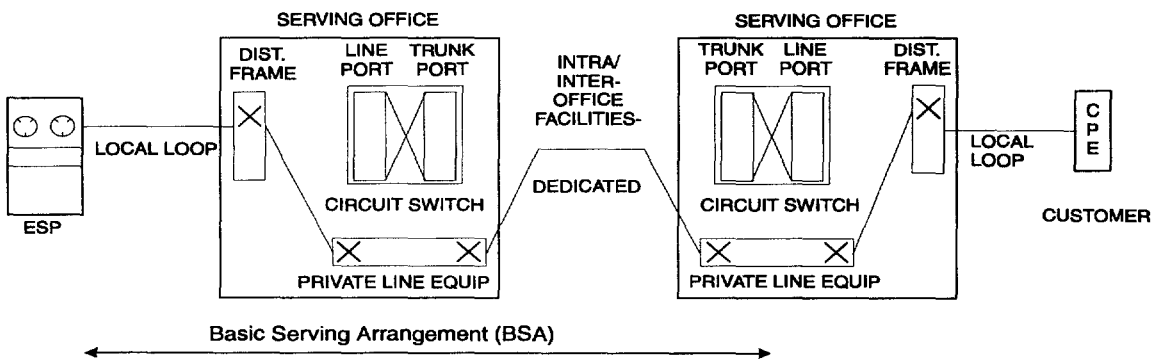

Alternatives

An alternative is an item that must be selected for the BSA to be technically meaningful. Alternative items may be available from some or all of the Local Exchange Carriers (LECs). Refer to the individual LEC tariff reference diskette for the reference information where LEC defined alternatives may be found.

[SM] REACT is a service mark of Bell Atlantic.

® WATCHALERT is a registered service mark of BellSouth Corporation.

[SM] PULSENET is a service mark of NYNEX.

[SM] POLLSTAR is a service mark of Pacific Bell.

Signaling

Dedicated serving arrangements are available full-time and therefore supervisory signaling arrangements are not applicable.

Transmission

The subject of transmission covers a broad range of performance considerations related to the physical facilities that compose network architecture. Transmission parameters are designed to provide objective transmission performance characteristics, as perceived by the end user and LEC, between the points of termination. Transmission parameters are defined for each Network Interface (see below) supporting this BSA. These parameters are defined in the reference documentation.

Network Interfaces

The electrical interface with the LEC is described by a Network Channel Interface (NCI) code for each end user termination and each service provider termination. The NCI codes for the desired service must be specified by the customer when ordering metallic services. NCI codes are provided to aid the user in understanding the relationship of the network interface to the electrical or optical characteristics of the interface. NCI codes have four basic components: (1) number of conductors (wire or fibers), (2) protocol code, (3) nominal reference impedance code, and (4) any applicable protocol options.

Reference

- BellSouth Publication TR-73530 Description of the Network Interface at an Alarm Agency to WATCHALERT® Service, Issue A, June 1989

® WATCHALERT is a registered service mark of BellSouth Corporation.

3.10 Category 3, Type J - Dedicated Derived Channel BSA (1024)

Service Description

The dedicated derived channel BSA provides one or more low-speed dedicated data channels (e.g. 9.6 kbps) derived on a dial tone line in addition to the voice channel. The customer is provided with a multiplexed interface requiring the use of a data-voice multiplexer (DVM) on the customer's premises. A matching DVM in the central office splits off the data channel(s) from the voice path before the voice path enters the circuit switch.

Several options may be available for extending the derived data channel to the ESP, including a low-speed private line, a multiplexing arrangement whereby several derived channels are transmitted on a higher speed private line, or a data voice multiplexer similar to the equipment employed on the end user's access link resulting in "back-to-back" derived channels.

Generic Name of BSA	Regional Company BSA Name
Category 3, Type J - Dedicated Derived Channel BSA	BA - Dedicated Derived Channel BS - Derived Data Channel Service NX - DOVPATH® Transport Service SWB - DovLink℠ USW - Simultaneous Voice and Data Service

Dedicated – Private Line – BSA

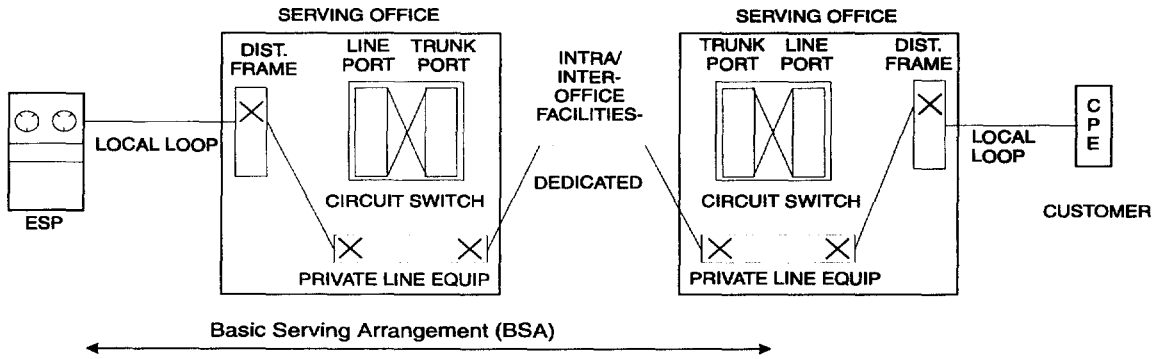

Alternatives

An alternative is an item that must be selected for the BSA to be technically meaningful. Alternative items may be available from some or all of the Local Exchange Carriers (LECs). Refer to the individual LEC tariff reference diskette for the reference information where LEC defined alternatives may be found.

® DOVPATH is a registered service mark of NYNEX.

Signaling

Dedicated serving arrangements are available full-time and therefore signaling arrangements are not applicable.

Transmission

The subject of transmission covers a broad range of performance considerations related to the physical facilities that compose network architecture. Transmission parameters are designed to provide objective transmission performance characteristics, as perceived by the end user and LEC, between the points of termination. Transmission parameters are defined for each Network Interface (see below) supporting this BSA. These parameters are defined in the reference documentation.

Network Interfaces

The electrical interface with the LEC is described by a Network Channel Interface (NCI) code for each end user termination and each service provider termination. The NCI codes for the desired service must be specified by the customer when ordering metallic services. NCI codes are provided to aid the user in understanding the relationship of the network interface to the electrical or optical characteristics of the interface. NCI codes have four basic components: (1) number of conductors (wire or fibers), (2) protocol code, (3) nominal reference impedance code, and (4) any applicable protocol options.

Reference

- SR-NPL-000665 Network Interface Specification: DOV/DVM Type 1, Issue 1, January 1987

[SM] DovLink is a service mark of Southwestern Bell Telephone Company.

3.11 Category 3, Type K - Dedicated Digital (64 Kbps) BSA (1037)

Service Description

Dedicated Digital (64 Kbps) Service will provide a channel for duplex four-wire transmission of synchronous serial data at 64 Kbps. The channel provides a synchronous service with timing provided by the telephone company. The 64 Kbps channel will be provided between two customer designated premises or between a customer designated premise and a telephone company serving wire center.

Generic Name of BSA	Regional Company BSA Name
Category 3, Type K - Dedicated Digital (64 Kbps) BSA	AM - Ameritech Base Rate Service BA - Digital Data Service 64 KBS BS - DS-0 Transport Facilities NX - (see NYNEX note)* USW - Digital Data Service - 64 Kbps

Dedicated – Private Line – BSA

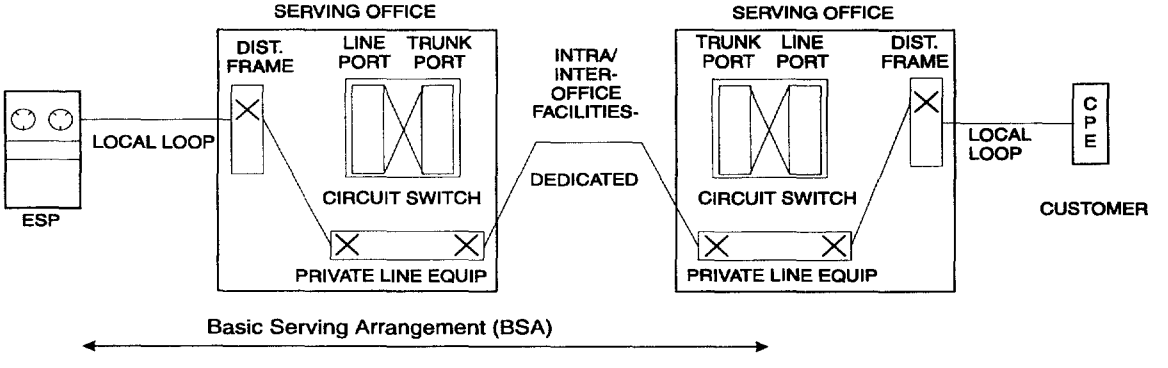

Alternatives

An alternative is an item that must be selected for the BSA to be technically meaningful. Alternative items may be available from some or all of the Local Exchange Carriers (LECs). Refer to the individual LEC tariff reference diskette

* Note: NYNEX offers 64 Kbps service associated with the Dedicated High Capacity Digital (1.544 Mbps) BSA.

for the reference information where LEC defined alternatives may be found. Examples of potential alternatives may be: Transfer Arrangement.

Signaling Arrangements

These services are available full-time and therefore supervisory signaling arrangements are not applicable. The signaling service is synchronous with timing provided through the LEC's facilities to the end user on the received bit stream. Individual calls are not set up and taken down.

Transmission Capabilities

The subject of transmission covers a broad range of performance considerations related to the physical facilities that compose network architecture. Transmission parameters are designed to provide objective transmission performance characteristics, as perceived by the end user and LEC, between the points of termination. Transmission parameters are defined for each Network Interface (see below) supporting this BSA. These parameters are defined in the reference documentation.

Network Interfaces

The electrical and physical interface with the LEC is described by a Network Channel Interface (NCI) code for each end user termination and each service provider termination. NCI codes are provided to aid the user in understanding the relationship of the network interface to the electrical or optical characteristics of the interface. NCI codes have four basic components: (1) number of conductors (wire or fibers), (2) protocol code, (3) nominal reference impedance code, and (4) any applicable protocol options. The NCI codes for the service desired must be specified by the customer when ordering. Only certain code combinations are compatible, as listed in TR-NWT-000341.

References

- TR-NWT-000341 Digital Data Special Access Service – Transmission Parameter Limits and Interface Combinations, Issue 2, February 1993

- Ameritech Technical Reference TR-OAT-00070 Issued October 1990, Ameritech OPTINET 64 Interface Specifications, Issue 1, September 1990

- BellSouth Technical Reference TR 73545 SynchroNet® Service Network Interface Specifications, Issue D September, 1994

® SynchroNet is a registered service mark of BellSouth Corporation.

4. Category 4 - Dedicated Network Access Link BSA (1025)

Service Description

The dedicated network access link (DNAL) BSA provides a dedicated data channel between the ESP's termination and a designated central office which contains the specific features required by the ESP. The DNAL is used to transmit network information or network control information from the ESP to the network (e.g., activate a message waiting indicator), or to deliver network information or network control information from the network to the ESP (e.g. calling number identification over a message desk interface). The type of DNAL BSA used will determine the bandwidth alternatives and capabilities available to the ESP.

The DNAL BSA can support one-way or two-way transmission depending on the alternatives used.

Route diversity may be available with this serving arrangement.

Generic Name of BSA	Regional Company BSA Name
Category 4 - Dedicated Network Access Link BSA	AM - Dedicated Network Access Link
	AM - Type A-Signal Transfer Point Access (STP) (2011)
	AM - Type B-Circuit Switch Facility Control (CSFC) (2012)
	AM - Type C-Simplified Message Desk Interface (SMDI) (2013)
	AM - Type D-Simplified Message Desk Interface-Expanded (SMDI-E) (2014)
	AM - Type E-Ameritech Reconfiguration Service (2015)
	AM - Type F-Alarm Service (2016)
	AM - Type G-Ameritech Switch to Computer Applications (ASCAI) (2017)
	BA - Dedicated Network Access Link
	BS - Private Line/Special Access
	NX - (see NYNEX note)*
	PB - Dedicated Network Access Link
	SWB - Special Access - Metallic
	SWB - Special Access - Voice Grade
	SWB - Switched Access Dedicated Network Access Link
	USW - Analog PLS

* Note: NYNEX offers dedicated channels for specific network information or network control information as part of the appropriate BSA or BSE that provides the specific capability.

Category 4 – Dedicated Network Access Link – BSA

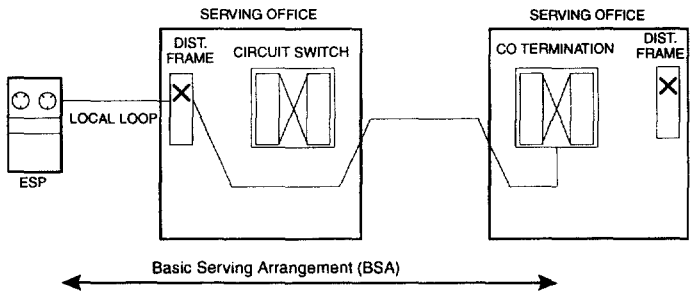

Alternatives

An alternative is an item that must be selected for the BSA to be technically meaningful. Alternative items may be available from some or all of the Local Exchange Carriers (LECs). Refer to the individual LEC tariff reference diskette for the reference information where LEC defined alternatives may be found.

Signaling

Signaling capability provides for the process by which one customer premises alerts another customer premises on the same service with which it wishes to communicate. These signals are the means by which the end user initiates a request for service, holds a connection or releases a connection.

Transmission

The subject of transmission covers a broad range of performance considerations related to the physical facilities that compose network architecture. Transmission parameters are designed to provide objective transmission performance characteristics, as perceived by the end user and LEC, between the points of termination. Transmission parameters are defined for each Network Interface (see below) supporting this BSA. These parameters are defined in the reference documentation.

Network Interfaces

The electrical and physical interface with the LEC is described by a Network Channel Interface (NCI) code for each end user termination and each service provider termination. NCI codes are provided to aid the user in understanding the relationship of the network interface to the electrical or optical characteristics of the interface. NCI codes have four basic components: (1) number of conductors (wire or fibers), (2) protocol code, (3) nominal reference impedance code, and (4) any applicable protocol options.

References

- TR-NWT-000335 Voice Grade Special Access Service - Transmission Parameter Limits and Interface Combinations, Issue 3, May 1993

- TR-NPL-000336 Metallic and Telegraph Grade Special Access Services - Transmission Parameter Limits and Interface Combinations, Issue 1, October 1987