ORIGINAL

EX PARTE OR LATE FILED

September 29, 2000

RECEIVED
SEP 29 2000
FEDERAL COMMUNICATIONS COMMISSION
OFFICE OF THE SECRETARY

Ms. Magalie Roman Salas
Secretary
Federal Communications Commission
The Portals
445 12th Street, S.W.
Washington, D.C. 20554

Re: Ex parte CC Docket Nos. 96-262; 97-146

Dear Ms. Salas:

Focal Communications Corporation ("Focal") submits this written *ex parte* communication in the above-referenced proceedings. In these proceedings, the Commission requested comments on whether to implement mandatory detariffing of CLEC interstate access services. The Commission asked commenters to discuss whether detariffing would provide a market-based solution to excessive CLEC terminating charges by encouraging parties to negotiate terminating access charges.

The attached analyst report indicates that some IXCs and CLECs have negotiated interstate access charges that exceed ILEC and CLEC interstate access charges. Specifically, according to the attached report, Mpower Communications Corp. ("Mpower") has reached a long-term agreement concerning interstate access rates with both AT&T and WorldCom. The agreed upon rate is reported to be approximately $.05 per minute, which is significantly higher than a number of CLEC (including Focal's) access rates.

This information lends further support to Focal's comments in these proceedings that there has been no market failure and IXCs must be required to pay CLEC tariffed interstate access charges for the access services they receive. This information regarding the Mpower settlement illustrates the fallacy in the IXCs' arguments that CLEC rates are set too high. If the report on the Mpower settlement is accurate, WorldCom and AT&T agreed to pay Mpower $0.50 for access charges. As noted, this rate is substantially

200 North LaSalle Street Chicago, IL 60601 Voice: 312-895-8400 Fax: 312-895-8403

FOCAL

higher than the rate charged by Focal and other CLECs and yet, AT&T is refusing to pay Focal's rate. If AT&T has agreed to pay rates that are higher than Focal's access rates, it must admit that Focal's access rates are reasonable and pay those rates according to the terms of Focal's tariff.

Sincerely,

Pamela S. Arluk

Richard J. Metzger
Pamela S. Arluk

Focal Communications Corporation

cc: Dorothy Attwood
Jane Jackson
Richard Lerner
Tamara Preiss

200 North LaSalle Street Chicago, IL 60601 Voice: 312-895-8400 Fax: 312-895-8403

unwarranted. We must acknowledge, however that investors have historically had a negative sentiment

RBC DOMINION SECURITIES

August 24, 2000
Morning Comment
David J. Bank (212) 858-7333
Eric M. Schrumpf, Associate (212) 858-7330

US EMERGING LOCAL TELECOMMUNICATIONS

Switched Access Revenues Will Probably Become the Next CLEC "Overhang" Issue, But We Believe Concerns In Many Cases Are Unwarranted

Switched access revenue is becoming a hot button for CLEC investors. Some long distance companies have withheld payment of switched access charges to CLECs, principally citing tariffs rates that are perceived to be unreasonably high among other issues. At the same time, switched access has become a significant contributor to the revenue base of many CLECs. As a result, investors have begun to ask, 'Do we have another reciprocal compensation type overhang situation on our hands?' For the most part, we do not believe there is an industry wide issue, but we do have a few individual concerns.

Poised to come under the heaviest fire are Mpower Corp. and Allegiance Telecom, whose total 2Q revenues were composed 42% and 29%, respectively, of switched access revenue.

Mpower has locked in forward rates with both AT&T and WorldCom, which provide for certainty regarding the collection of the vast majority of switched access. In addition, we believe current reserves are sufficient to cover outstanding uncollected and overdue receivables from Sprint. However, given investors' sensitivity to uncertainty, we feel it would be prudent for the company to take a more conservative approach and, at a minimum reserve against all billed but uncollected Sprint revenue in the future, and at a maximum not recognize this revenue until it is received. We note that Sprint related access revenue only represents about 5% of Mpower's current total revenue base.

We believe that Allegiance has basically mitigated any potential negative exposure to the uncertainty surrounding switched access revenues by adopting a policy of recognizing switched access revenues only when they are received.

Companies in our coverage universe with the least exposure to the switched access "overhang" include NEXTLINK, Net2000, McLeodUSA, Adelphia Business Solutions, ICG and Focal, all of which have filed switched access tariffs that are, on average, at or below about $0.025 per minute (in the range of current ILEC tariffs).

Our conclusion is that any potential industry wide overhang due to switched access revenue is largely unwarranted. We must acknowledge, however that investors have historically had a negative sentiment toward uncertainty with respect to regulatory outcomes and this is one of them.

The information contained in this report has been compiled by RBC Dominion Securities Inc. ("RBCDS-Canada") from sources believed by it to be reliable, but no representations or warranty, express or implied, is made by RBCDS-Canada or any other person as to its accuracy, completeness or correctness. All opinions and estimates contained in this report constitute RBCDS-Canada's judgement as of the date of this report, are subject to change without notice and are provided in good faith but without legal responsibility. This report is not an offer to sell or a solicitation of an offer to buy any securities. RBCDS-Canada and its affiliates may have an investment banking or other relationship with some or all of the issuers mentioned herein and may trade in any of the securities mentioned herein either for their own account or the accounts of their customers. RBCDS-Canada and its affiliates also may issue options on securities mentioned herein and may trade in options issued by others. Accordingly, RBCDS-Canada or its affiliates may at any time have a long or short position in any such security or option thereon. The securities discussed in this report may not be eligible for sale in some states or in some countries. Neither RBCDS-Canada or any of its affiliates, nor any other person, accepts any liability whatsoever for any direct or consequential loss arising from any use of this report or the information contained herein. Any U.S. recipient of this report that is not a registered broker-dealer or a bank acting in a broker or dealer capacity and that wishes further information regarding, or to effect any transaction in, any of the securities discussed in this report, should contact and place orders with RBC Dominion Securities Corporation, a U.S. registered broker-dealer affiliate of RBCDS-Canada, at (212) 858-7019, which, without in any way limiting the foregoing, accepts responsibility (within the meaning, and for the purposes, of Rule 15a-6 under the U.S. Securities Exchange Act of 1934), for this report and its dissemination in the United States. This report may not be reproduced, distributed or published by any recipient hereof for any purpose. **Additional information available on request.**

Issue Summary

Access charge revenues being recognized by some CLECs, given current regulatory controversy surrounding this revenue stream, have created a hotbed of controversy. We do not believe that the absolute level of access charge related revenues of any CLEC should be a concern. Nor are we concerned that filed tariff rates may fail to reflect a realistic outcome of current regulatory battles. More of a concern to us is the manner in which some CLECs recognize revenue that is not necessarily being collected and the guidance on the rate at which CLECs expect to recognize revenue in the future that CLEC management teams have given "the Street". After further examination, we believe the implications for our coverage universe are not as negative as recent rumblings suggest. Most companies have very little exposure stemming from uncertainty surrounding switched access revenue.

What is Switched Access?

Switched Access Service links the local network to the long-distance network. It allows voice service customers to connect to their selected inter exchange carrier (IXC) for outbound long distance calls, or to have inbound long distance traffic delivered to those voice service customers. Deploying a circuit between two communicating devices, which is set *up for the duration of the communication only* creates switched access. This is in contrast to dedicated access (the old CAP business), where the circuit is a dedicated, permanent connection.

Switched Access

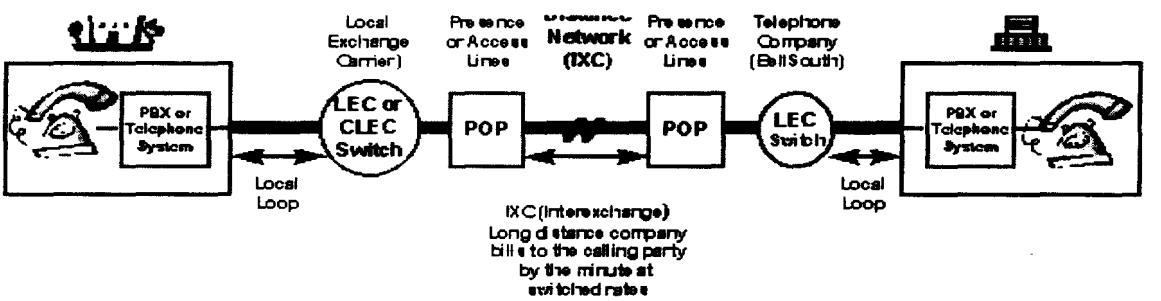

Source: http://www.ecuserve.com/diagramsswitchedout.htm

Switched Access Compensation is Determined By Tariffed Rates

Local exchange companies (CLECs and ILECs) earn revenue from providing access to the IXCs. Rates are established through a process called tariffing. Tariffing is the process by which telephone companies post all terms, conditions, pricing, and available services that they offer for public inspection at state and federal regulatory agencies. IXCs do not generally negotiate the price of switched access, but rather it has generally been common practice for them to simply pay the tariff rate.

Compensation For Switched Access – RBOCs Charge Less Than the Small, Independent LECs

In general, RBOC switched access charges have been coming down due to competitive and regulatory pressures over the past few years. Currently, they tend to be around the $0.0150 - $0.025 per minute range.

However, the smaller independent LECs (generally located in less densely populated areas) who are collectively represented by the National Exchange Carrier Association (NECA) tend to have substantially higher access charges that can be in the $0.045 to $0.080 range. NECA has justified rates that are

generally higher than those charged by the larger ILECs because larger ILECs in more densely populated areas have many more customers to spread fixed costs over and therefore lower per unit costs.

Illustrative Rural LEC Termining Access Rates

RLEC	State	Per Minute Termination Rate
Blue Earth Telephone Co.	Minnesota	$0.068
Smithville Telephone Co.	Indiana	$0.076
Anchorage Telephone Utility	Alaska	$0.043
The Champaign Telephone Co.	Ohio	$0.035

Source: FCC.

Some Of The CLECs Have Adopted Rates Similar to the Small Independent LECs

Some of the CLECs have set their access charge rates at the same levels as those of the smaller LECs (the NECA rate). The rationale for the CLECs had been that they too, had fewer customers than the large ILECs, and thus greater per unit fixed costs. However, their per unit cost disadvantage did not stem from low population density, but rather low customer bases.

Illustrative CLEC Terminating Access Rates

	Per Minute Tariffed Rate
MPWR	$0.077
ALGX	$0.070
NTKK	$0.045
TWTC	$0.027
MCLD	$0.025
FCOM	$0.025
NXLK	$0.025
ICGX	$0.023
ABIZ	$0.01 - $0.02

Source: Company reports and RBCDS estimates.

Switched Access has Become a Significant Contributor to CLEC Revenue.....But In Some Cases the IXCs are Refusing to Pay

Some CLECs, particularly those with a customer base that originates and terminates a significant amount of long distance traffic, have benefited from these higher tariff rates and have generated meaningful portions of their total revenues from switched access. However, principally due to the disparity between the CLEC and ILEC tariffs, a number of IXCs have been withholding payment.

The following example illustrates why a number of IXCs have attempted to withhold payment for access charges:

When an IXC call terminates on an RBOC line in a particular market, the IXC would generally pay $0.015 to $0.025 per minute for terminating access. However, if the same IXC call terminates on a CLEC line (located right next to the RBOC customer we just mentioned), the IXC might be required to pay termination rates as high as $0.045 - $0.080 per minute. The IXCs' claim that CLEC charges for switched access services are higher than those of ILECs serving the same territories and are therefore unjustified and unreasonable. In addition, many IXCs contend that they have not "actively ordered" switched services at a rate they have agreed to; rather switched access services are purchased automatically upon origination and termination of long distance calls without choice. As a result, in some

cases, some of the largest IXCs such as AT&T, WorldCom and Sprint have refused to pay access charges to CLECs at tariffed rates.

Specifically, in recent months, AT&T and Sprint have sent letters to many CLECs asserting that the nondominant provider's terminating access rates are unreasonable, and demanding a reduction in rates to a "competitive" level. AT&T has also asserted that it has no obligation to purchase switched access services from non-dominant providers if it is not satisfied with their rates, and has refused to pay some carriers' invoices for these services. This has obviously given rise to some uncertainty surrounding switched access revenue.

Given the uncertainty of access payments, it is important to note the extent to which switched access comprises the total revenue streams of many CLECs. The following table illustrates just how significant the switched access revenue stream was for some CLECs such as Mpower Communications and Allegiance Telecom in the second quarter.

CLECs Rely On Switched Access Revenues to Varying Degrees
($ in millions)

	Q2'00 Switched Access Revenues	Q2'00 Switched Access Revenues as a % of Total Revenue
MPWR	$13.00	42.0%
ALGX	$18.30	29.0%
FCOM	$7.59	12.5%
ABIZ	$10.00	12.0%
NXLK	$14.06	10.0%
NTKK	$1.26	9.6%
TWTC	$10.84	8.2%
ICGX	$5.27	3.0%
MCLD	$5.31	1.6%

Source: Company reports and RBCDS estimates.

Do We Have A Crisis Brewing Similar to The One Surrounding Reciprocal Compensation?
We believe that the reciprocal compensation "crisis" – which resulted in write-downs, as well as downward revisions of forward earnings estimates for some companies -- resulted largely from the CLECs being in "denial". In the face of controversy raised by litigation and ILEC refusal to pay reciprocal compensation, many CLECs continued to book reciprocal compensation at the their historically contractual, but unrealistically high (given PUC arbitration precedents as well as private settlements) rates. In addition, many continued to book reciprocal compensation not as it was collected, but as it was billed. In an environment of uncertainty of collection, this policy invited a crisis. In addition, some management groups continued to guide forward Wall Street estimates that incorporated these unrealistically high rates. When the CLECs were forced out of denial and incorporated more realistic assumptions, numbers had to "come down" on a forward basis, and sometimes, on a retrospective basis. *We do not see a similar parallel for most of the CLECs in switched access charges, particularly on the forward guidance side.*

Why We Do Not Think This Will Be a Major Industry-Wide Overhang
It is true that many of the CLECs are generating significant revenues from the controversial access revenue stream. It is also true that some CLECs have posted tariff rates that are extremely high in comparison with: a) RBOC rates; and, b) with what the IXCs seem prepared to pay. However, *most* of the CLECs are doing one or more of the following to mitigate risks: a) billing switched access at or close

to the ILEC rates which the IXCs are paying; b) recognizing revenue only when it is collected, not simply when it's billed; c) negotiating settlements that give greater certainty to revenue collection; or, d) reserving against the difference between revenue recognized at higher rates, and revenue implied by the lower rates that the IXCs are likely ultimately to pay. Finally, almost all of the CLECs are using ILEC type rates in their guidance for forward earnings.

CLECs Are "Dealing With" The Access Charge Issue

	Backward Looking Issues			Forward Looking Issues		
	Tariff Relative To ILECs	Red Flag?	Booked But Overdue Receivables (90 day+; $MM)	2H00E Projected MOU Revenue Rate	Red Flag?	Qualitative Assessment
ABIZ	Basically in-ine with ILEC	No Red Flag	$0	$0.01 - $0.02	No Red Flag	Historically, according to management, ABIZ has tariffed rates that are at a slight discount to the ILEC, so IXCs have historically not disputed the rate.
ALGX	Substantially higher than the ILEC	Red Flag Raised	$0	$0.025	No Red Flag	Recognizing revenue only as it is collected. Also projecting revenue rate conservatively. As a result, exposure should be zero.
FCOM	Basically in-ine with ILEC	No Red Flag	Management would not disclose specifically, but said it was insignificant.	$0.015	No Red Flag	Billing at the ILEC rate so IXCs have historically not disputed the rate.
ICGX	Basically in-ine with ILEC	No Red Flag	$0	$0.023	No Red Flag	Billing at the ILEC rate so IXCs have historically not disputed the rate.
MCLD	Basically in-ine with ILEC	No Red Flag	$0	$0.025	No Red Flag	Recognizing revenue two months after it is collected to protect against potential reversals – very conservative policy. As a result, exposure should be zero.
MPWR	Substantially higher than the ILEC	Red Flag Raised	$0, including an $8 million reserve	$0.05 – $0.0525	Red Flag Raised	MPWR has negotiated settlements with both AT&T and WorldCom on a historical and forward basis. The negotiated rate is believed to be about $.005 per minute for 2000, ramping down to ILEC levels over the next several years. Sprint is not paying but MPWR is reserving against a portion of future Sprint access revenues.
NTKK	Substantially higher than the ILEC	Red Flag Raised	$0, including a $0.5 million reserve	$0.015	No Red Flag	In 2Q, took a charge representing about 30% of switched access collected representing the bulk of unpaid but recognized AT&T/Sprint charges.
NXLK	Basically in-ine with ILEC	No Red Flag	$0, including a minimal reserve	$0.0020 - $0.0300	No Red Flag	Currently having no collection problems.
TWTC	Basically in-ine with ILEC	No Red Flag	Not disclosed, but we believe that management is reserving against one major IXC that has failed to pay.	$0.027	No Red Flag	TWTC is engaged in a contractual dispute with AT&T over volume discounts and is taking a reserve against the disputed amount. Sprint is not paying and thus TWTC is taking an appropriate discount for anything past 90 days due from Sprint.

Source: Company reports and RBCDS estimates.

But We Do Think Mpower Could Have Minimal Exposure

Although Mpower's published switched access tariff rate is north of $0.07 per minute, historically, Mpower booked switched access revenue at a rate that it locked in through long-term agreements with AT&T and WorldCom that we believe to be about $0.050 per minute. However, Mpower is also billing and recording revenue from Sprint at a similar rate although Sprint historically has refused to pay Mpower's switched access charges. On a historical basis, we believe that Mpower has established a reserve that covers its potential exposure to "uncollected but billed and booked" Sprint revenue. On a forward basis, Mpower's long term contracts and historical experience with less cooperative long distance providers should provide ample forward visibility into the level of switched access revenue it can realistically expect to collect from Sprint.

We are cautiously optimistic that the company will be able to resolve its dispute with Sprint on acceptable terms. We would note though, that investors should be aware of how much of the company's forward revenues is dependent upon Sprint based switched access revenues. Based on the $0.050 per minute rate discussed above, we believe that currently roughly 5% of Mpower's total revenue stream is dependent on switched access revenue billed to Sprint. However, we would note that switched access revenues as a percentage of total revenue should decrease on a going forward basis as per minute rates come down (as stipulated in the company's agreements with AT&T and WorldCom and as management continues to evaluate the rate at which it records Sprint revenues) and as bundled revenue streams increase.

Why We Do Not Think Allegiance Has An Issue

We believe that Allegiance has alleviated virtually all potential negative exposure from switched access revenue, although it has a significant revenue stream from switched access as well as tariff rates that

substantially exceed ILEC rates. Since the collection of switched access came into question about one year ago, Allegiance began its policy of recognizing switched access revenue *only upon collection* of revenue thus eliminating the risk of switched access write-offs due to miss-matches of revenue recognition and revenue receipt. We also believe that Allegiance is incorporating switched access rates in its forward guidance to "the Street" that are substantially below its tariff rate. As such, concerns over Allegiance's ability to meet switched access revenue targets, even in the face of switched access rate uncertainty, should be allayed.

What About The Others

Companies in our coverage universe with the least exposure to the switched access "overhang" include NEXTLINK, Time Warner Telecom, Net2000, McLeodUSA, Adelphia Business Solutions, ICG and Focal. All of these companies have filed switched access tariffs that are, on average, approximately at or below about $0.025 per minute (in the range of current ILEC tariffs). Switched access is a significant component of revenue for all these companies, but not greater than 12.5% of total revenues during the 2Q for any of them.

In addition, we believe that forward revenue projections for these companies incorporate switched access revenue rate assumptions that are consistent, or more conservative than these relatively conservative tariff rates.