marginalized.[144] Project Pronto is a demonstration of how evolving technological equipment is becoming smaller and can be rapidly deployed.[145]

As this Commission has recognized, remote terminals are becoming the central offices of today, with many of the essential telecommunications functions being moved out to such structures. The rapid way in which SBC plans to deploy these remote terminals demonstrates that network planning and expansion requires less time than it did a few years ago. Thus, there is simply no basis for the excessive time periods ILECs seek for reservation of space. That ILECs are continuing to insist on such excessive space reservation time frames demonstrates that ILECs are not basing these policies on the realities of the market, but on their desire to leverage their control of available collocation space. The Commission has taken an important first step in recognizing the way in which ILEC space reservation plans can impede competition and the need for the policies to check such plans. The Commission needs to take the next step and implement a national, uniform policy that will limit these space reservation plans. Mpower proposes that a period of a year would be sufficient to give ILECs an opportunity to engage in

---

[144] For instance, SBC's Project Pronto architecture utilizes integrated DLC technology that bypasses the main distribution frame altogether. *Petitions of Covad Communications Company and Rhythms Links, Inc. for Arbitration Pursuant to Section 252(b) of the Telecommunications Act of 1996 to Establish an Amendment for Line Sharing to the Interconnection Agreement with Illinois Bell Telephone Company d/b/a Ameritech Illinois, and for an Expedited Arbitration on Certain Core Issues*, Illinois Commerce Commission Docket Nos. 00-0312 and 00-0313, Arbitration Decision at p. 11 (August 17, 2000)("*IL Line Sharing Order*")

[145] As part of its Project Pronto, SBC will "install or upgrade approximately 25,000 neighborhood broadband gateways containing next-generation digital loop carriers." SBC Communications, Inc., *Project Pronto: SBC's Network Vision and Strategy* (November 1999).

network planning. In the evolving telecommunications market, any period longer than a year is not needed and will exclude valuable space that can be used in ILEC premises.[146]

It is worth noting that Qwest has recently proposed that it will not reserve space for itself on terms more favorable than those it offers to CLECs.[147] It also proposes to remove obsolete or unused equipment at its own expense in order to provide more collocation space.[148] These commitments show that ILECs can implement space reservation policies that do not disadvantage CLECs.

In addition, the Commission's focus needs to shift from allowing ILECs to reserve space to requiring ILECs to utilize configurations and equipment efficiently in order to increase the availability of space available for collocation. Rather than allowing ILECs to have the ability to reserve space for indefinite periods, policies should be implemented that will place on ILECs an affirmative obligation to ensure that space is available both in the central office and in remote terminals. Technology is providing ways to address the space limitation issues that have inhibited the development of competition to date. These developments should not be undercut by ILEC practices that will limit space in the future.

---

[146] The time frame should not be equipment-specific, *i.e.,* the similar/dissimilar distinction should be eliminated. Technology is integrating equipment and blurring old definitional lines. There is no need for a longer time frame for equipment such as switches.

[147] Statement of Generally Available Terms and Conditions for Interconnection, Unbundled Network Elements, Ancillary Services, and Resale of Telecommunications Services Provided by Qwest Corporation, Six State Workshop, September 27, 2000, Section 8.2.1.16.

[148] *Id.* Section 8.2.1.14.

SBC has committed to making more collocation space available in remote terminals it deploys after September 15, 2000.[149] This shows that ILECs do have capabilities to plan their networks not only to meet their needs, but also to provide for space to effectuate non-discriminatory access to their premises. It also suggests that up to this point, SBC was not providing for such space in its remote terminals, given the lack of collocation space at the existing terminals. The Commission needs to implement policies that transform the focus of network planning from unnecessarily reserving existing space in premises to encouraging the provision of more space in these premises. The focus has to switch from space reservation to space enhancement.

VII. CONCLUSION

For the foregoing reasons, the Commission should adopt the policies and requirements urged by Mpower.

Respectfully submitted,

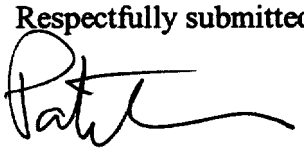

Helen E. Disenhaus
Patrick J. Donovan
Swidler Berlin Shereff Friedman, LLP
3000 K Street, N.W. - Suite 300
Washington, D.C. 20007
(202) 424-7500

Kent F. Heyman
Senior Vice President & General Counsel
Francis D. R. Coleman
Vice President, Regulatory Affairs
Richard E. Heatter
Vice President, Legal Affairs
Mpower Communications Corp.
175 Sully's Trail - Suite 300

---

[149] *Project Pronto Order*" at ¶ 34.

Pittsford, NY 14534
(716) 218-6568 (tel)
(716) 218-0165 (fax)

Attachment A

Typical Circuit Switch Layout

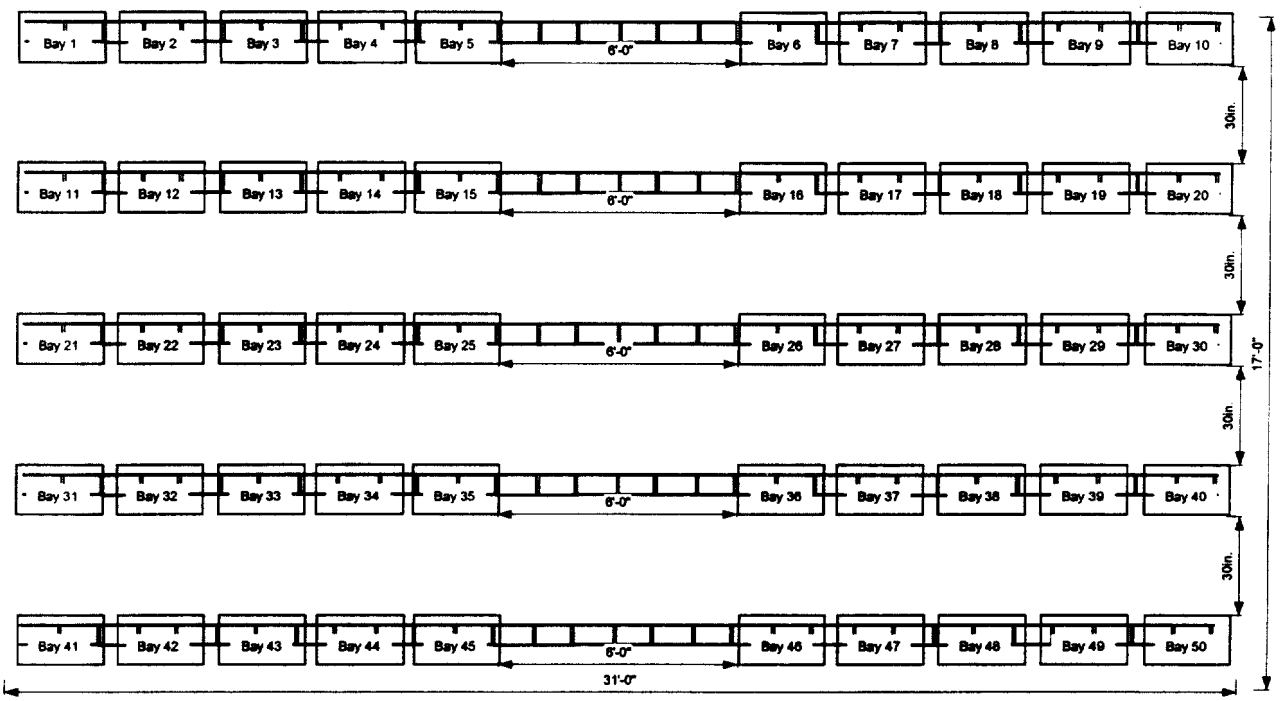

Typical Packet Switch Layout

Sample 10 x 10 Collocattion Cage

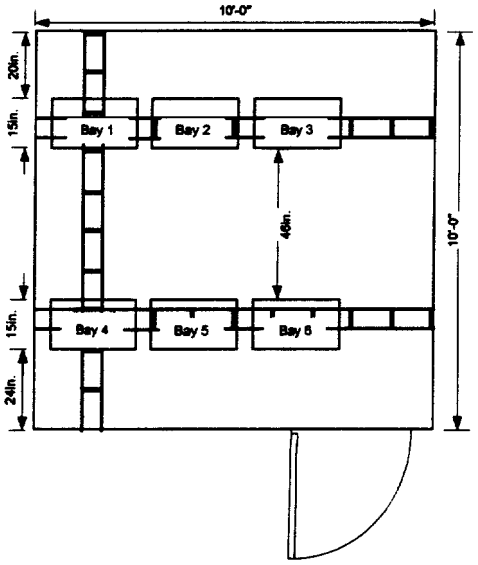

Attachment B

Mpower Communications Corp.

Analytical Framework for the Development of New Fiber and Other UNEs:

Establishing a Foundation for the Evolution of UNEs in a Competitive Environment

October 12, 2000

Darrell Gentry
Senior Network Engineer
11432 Lackland Road
St. Louis, MO 63146
314-983-8465

Daniel Pinkard
Senior Network Engineer
11432 Lackland Road
St. Louis, MO 63146
314-983-8466

I. EXECUTIVE SUMMARY

This document proposes a practical framework for defining new UNEs (Unbundled Network Elements), in response to NGDLC (Next Generation Digital Loop Carrier) network architectures that extend fiber and electronics capability from the CO (Central Office) to the RT (Remote Terminal). This model will allow the fundamental building blocks of competition to remain fresh and vibrant against the backdrop of technical advances and a rapidly evolving PTN (Public Telephone Network). Such a foundation is necessary to allow competition to thrive and prevent incumbent carriers from eclipsing competitors through a build out of new network architectures for which no models for competitive access have been established.

II. INTRODUCTION

The UNE, as created by the Telecommunications Act of 1996, is the most effective tool for enabling a competitive environment in the telecommunications industry. The principle behind the UNE is to enable unrestricted access to the existing plant of the ILECs (Incumbent Local Exchange Carriers) for the deployment of competitive services. Until now, this availability of resources has enabled emerging CLECs (Competitive Local Exchange Carriers) to reach a growing community of customers via their own equipment and networks. It is essential that this availability of resources continue as new networks and technologies are deployed.

At the core of any product offering is the simple goal of harnessing the potential of the physical plant. It is the access to the features and capabilities of these loops that has enabled new services ranging from DSL (Digital Subscriber Line) to converged voice and data products, as well as competitively priced POTS (Plain Old Telephone Service) based services. Without direct access to the physical plant, a CLEC has no way to force an ILEC to approve, provision, or deliver the desired services in a fair and competitive manner. This, in the absence of UNEs, effectively prevents the customer from enjoying the benefits of competition, including cost savings and a new generation of advanced services by innovative competitive providers.

To date these UNEs have been defined and designated based on the available technology either already deployed or under consideration. These elements comprise an effective, if not complete, suite of choices to encourage competition and innovation. Current loop UNEs include 2 Wire Analog, 4 Wire Analog, 2 Wire Digital, 4 Wire Digital, Dark Fiber, and various DSL UNEs (e.g. SMC1, SMC2, etc.). These are directly tied to the technology and deployment of the physical facilities—the media in use. In many cases, the methods of using the given media change to accommodate newer technologies. For example, a CLEC may order a 2 Wire Analog UNE to provide POTS service, even if there is fiber optical cabling within the loop (see Figure 1).

Until recently, the facilities used to provide existing UNEs were exactly what their names implied—pairs of copper wires between the CO and the customer site. Increasingly,

however, the loop makeup is more complex due to the deployment of network architectures utilizing NGDLC systems and other new technologies. In certain locations, the first leg of the provided loop travels over fiber. Consequently, the facilities include fiber and copper cabling as well as sophisticated electronics at the CO and at the location where the fiber to copper conversion takes place. However, the handoff at each end of the loop remains the same in either case. Thus, the current deployment of NGDLC architectures by ILECs creates the need for the establishment of new UNEs.

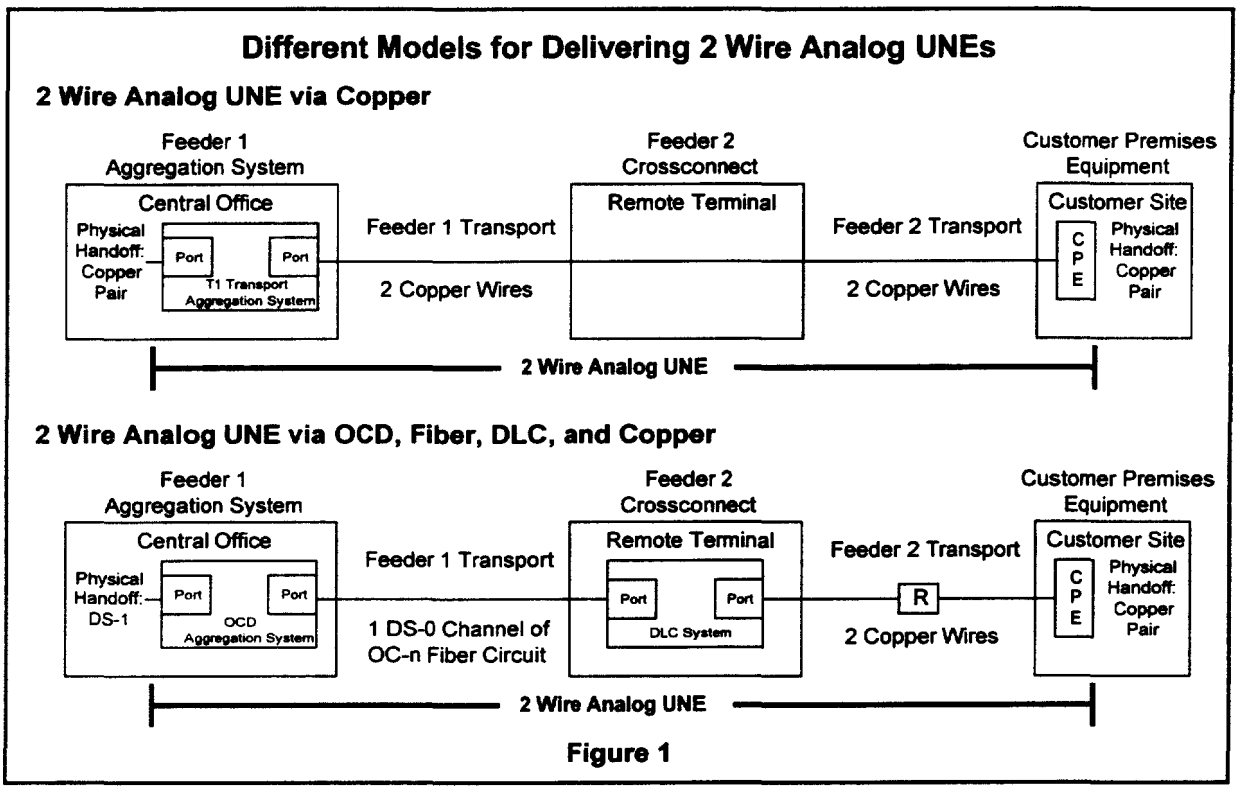

Figure 1

Accommodating the changing face of technology in the network demands that new UNEs be evaluated, designated and deployed to maintain competition in not only a legal frame of reference, but also technologically. SBC's Project Pronto is of landmark significance as it introduces both new media and new deployment methods to the PTN infrastructure. This far-reaching development not only employs fiber media, but also does so in such a way as to render useless previously available UNEs. The end result is that previously available UNEs, such as Feeder 1 Transport (see Figure 1), are no longer available as UNEs under the new network architectures because the have not been designated as such by the Commission.

III. DEFINING THE FUNCTIONAL MODEL FOR DESIGNATING UNBUNDLED NETWORK ELEMENTS

A. A Functional Model Should Reflect the Purpose and Roles of Network Elements

The functional model of a modern telecommunications network presents a method for understanding the purpose and role of each item in the network. As networks are required to deliver higher bit-rates to the subscriber, they take on additional processing functions distributed away from the CO. The pathway from CO to the customer can be segmented at each transition point described by the additional processing, or conversion, equipment. This aggregation/conversion equipment is traditionally placed at the Feeder 2 cross-connect point, but can be inserted anywhere to establish additional feeder or crossconnect points as the demands of the network increase. Connecting each stage of equipment is a transmission media. This media performs the transport function and is responsible for the delivery of signal to and from aggregation systems dispersed throughout the physical plant and to CPE (Customer Premises Equipment) locations. The transport media is connected at each end to a port in the aggregation system, providing the potential for many different types of media to be supported with whatever signaling is needed for that service delivery.

Previous generations of network deployment lacked the needed equipment or intelligence to perform more than a single conversion function, often using the conversion and origination/termination port at a crossconnect to boost a given signal and place it back onto the same type of transport media. Even modern ISDN (Integrated Services Digital Network) and T1 services are usually deployed in this manner. In the oldest generic service, POTS, the technology was designed to take full advantage of a comparatively limited selection of network equipment. It does not make use of any network outside of the CO (other than the physical conduits and bare transport media), relying on the phone switch and telephone set to handle all of the needed aggregation functions and the related origination/termination port. Often the first media conversion step happened on the trunk side of that switch, providing the same transmission process as used between the ILEC and a customer between different segments of the ILEC's network.

Likewise, the first generation of DSL equipment did not utilize any electronics outside the CO to perform the same set of origination/termination functions. As a result of the simple network employed, the first generation of DSL has issues relating to reach and interference, with the added burden of being unable to reach many potential customers due to an inability to provide bandwidth to a dispersion point far from the CO. By deploying an intermediate transmission and aggregation step, the copper transmission segment can be used more effectively. This is the advantage of new network architectures such as NGDLC networks. However, in order to maintain a competitive environment, new UNEs must be defined to reflect the new technologies and mediums.

B. Using a Functional Model to Identify the Need for New UNEs

A new set of UNEs can be defined by applying this functional model to a given service. This will allow CLECs to competitively provide services over these new networks. The

new additions to the PTN comprise a new segment of transmission media (or an old facility used in a new role) and its accompanying origination/termination port. This new transport media is connected to the existing segment via an aggregation system that handles any conversion and dispersion functions. Each point in this model represents a technically feasible point of interconnection, which provides obvious and natural loop and sub-loop elements. Generic UNEs are obvious for each transport media segment, including origination/termination equipment, as well as an end-to-end UNE delivering the specific service from the CO to the CPE. These natural choices are driven by the technology and media used. SBC's Project Pronto initiative, for example, consists of new OCDs (Optical Concentration Devices) at CO, the build out of fiber to RTs and the installation of NGDLC aggregation systems within the RTs. These new facilities represent a new Feeder 1 Aggregation System, Feeder 1 Transport, and Feeder 2 Aggregation system respectively (see Figure 2).

UNE Functional Model

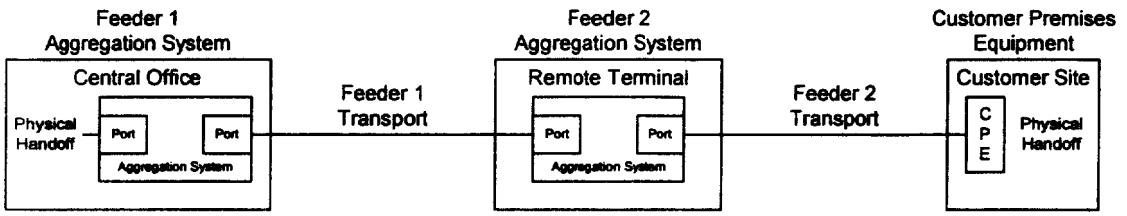

Figure 2

Just as existing UNEs that are typically available with no signaling equipment on the loop could later include advanced transmission systems (as in Figure 1), new UNEs will necessarily include the intermediate conversion, and aggregation equipment. The initial round of transmission media based UNEs were openly available to competitive providers for use with the appropriate signaling and conversion equipment. This freedom is not available in new network architectures consisting of multiple transmission mediums. In this model the CLEC's equipment at the CO can no longer serve as the actual generator of signaling on the final segment. Within the context of the functional model, the loss of this control cannot be overstated. An inability to specify the signaling placed onto the last segment removes any influence over the available service offerings. In addition, the selection and deployment of initial transmission mediums should not cloud the end objective: access to the features and capabilities of the final transmission portion of the loop.

The actual equipment and signal generated is a technology choice based on the desired service under deployment. Differing choices for signaling equipment represent different technologies, and reflect the demands of distinct service offerings. Enhanced freedom to select the most appropriate transmission technologies for reaching from the CO to the electronics in the field is an added benefit of having multiple UNEs available.

The net effect of this model is a simple and effective benchmark for the creation of new UNEs. Specifically, the deployment of increasing amounts of fiber in the outside plant

through such initiatives as SBC's Project Pronto highlights the need for a new set of fiber-based UNEs. Project Pronto, following in the footsteps of other DLC initiatives before it, represents a major deployment of next generation signaling equipment into the field with some 25,000 sites in SBC's 13 state region being affected. The application of the functional UNE approach to the Project Pronto model also serves as an excellent opportunity to open the decidedly closed existing DLC architecture to competition, thus providing not only more effective broadband deployments, but also more efficiently designed traditional telephony services.

IV. PROPOSAL FOR NEW FIBER UNES

A. Overview

The functional approach to UNE definition yields a number of practical UNEs that should be defined and made available immediately. A survey of these begins with a review of a design that uses a combination of UNEs already available today. Consider the example below of a CLEC DSLAM system collocated in an RT site (Figure 3). The DSLAM is linked to the CO via a Dark Fiber UNE and connects to customers using one of the UNEs available today: DSL, 2 Wire Analog, 2 Wire Digital or 4 Wire Digital UNEs. The advantage of this approach is a clear delineation between a CLEC's and ILEC's service and, although technically this model would work, it would be at the expense of requiring dedicated fiber pairs. The implementation of new Fiber UNEs at the Feeder 1 Transport yields a much more efficient design.

Collocated DSLAM served by Dark Fiber UNE

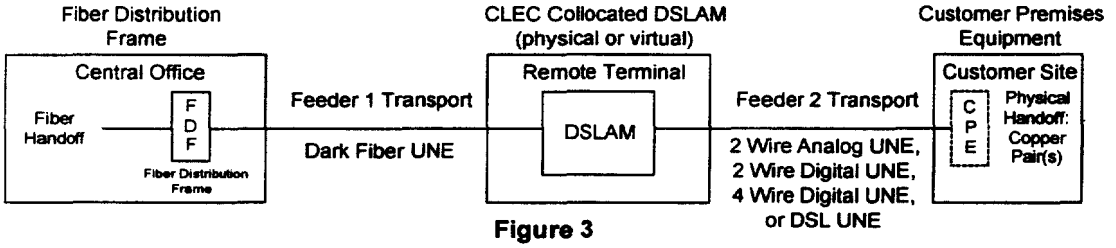

Figure 3

Instead of using a Dark Fiber UNE, the DSLAM could be linked to the same fiber optic cable already being used by the ILEC, by connecting the system to the ILEC's DLC, NGDLC or other Feeder 2 Aggregation facility. This could be accomplished by deploying ATM (Asynchronous Transfer Mode), WDM (Wavelength Division Multiplexing), or TDM (Time Division Multiplexing) technology over the fiber creating the Feeder 1 Transport (Figure 4). Each of these new UNEs provide varying degrees of security against unavailable service conditions caused by congestion in the ILEC's network. The advantages and disadvantages of each of these approaches are outlined below.

Collocated DSLAM served by New Fiber UNE

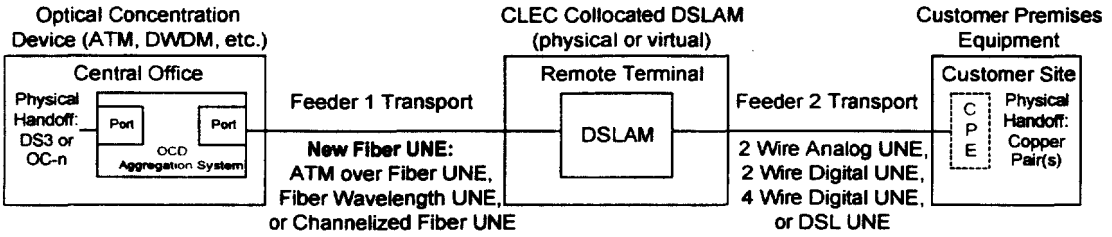

Figure 4

B. ATM over Fiber UNE

The immediate creation of an ATM over Fiber UNE is the most obvious and readily available alternative. It is a solution that is compatible with numerous next generation ILEC networks and that requires no installation of additional ILEC equipment. In fact, SBC has already proposed wholesale arrangements for providing ATM PVCs (Permanent Virtual Circuits) as the access solution for the Feeder 1 Transport portion of resold CLEC DSL loops. Due to the bottleneck nature of the Feeder 1 Transport and per the functional model as described above, this network element must be made available on an unbundled basis at the CO.

Unfortunately, using ATM is not a panacea. There are serious concerns related to the provisioning of ATM PVCs. In order to provide real-time integrated services on its DSL loops such as VoDSL (Voice over Digital Subscriber Line), critical latency constraints must be guaranteed. Furthermore, while IP-based QoS (Quality of Service) possibly provides an alternative approach, the most obvious method of providing derived voice services in an ATM environment (where ATM's overhead is already present) is to leverage ATM's inherent ability to support multiple Classes of Service. Using this approach for providing VoDSL services requires a minimum of two PVCs with differentiated QoS types for each customer site. The PVC containing voice traffic must be prioritized using a QoS type such as CBR (Constant Bit Rate) or VBRrt (Variable Bit Rate – Real Time) while the data PVC must be de-prioritized (relative to the voice PVC) so that traffic on the bandwidth-constrained DSL loop is distributed most efficiently. Typical data PVC QoS types are UBR (Unspecified Bit Rate) and VBRnrt (Variable Bit Rate – Non Real Time).

Unfortunately, even granting of the above (minimum latency, multiple PVCs per customer site, and support for different QoS types for different PVCs) may not be enough to guarantee the success of the ATM over Fiber UNE. There is a potential additional bottleneck in the network design: the fiber component itself. It is entirely possible that the fiber link connecting the OCD to the RT could become bandwidth constrained between the voice and data traffic of the ILEC and one or more CLECs.

Finally, a related, remaining concern involves the details of how the ILEC's ATM functions. Not all ATM switches are created equal, and both specific traffic prioritization and Virtual Path/Virtual Channel (VP/VC) provisioning approaches should be addressed

in the design of any specific UNE. For example, although CBR PVCs are often considered to be analogous to the dedicated channels provisioned over traditional TDM networks, some ATM switches allow for the oversubscription of CBR traffic. Thus, dangers of network congestion and consequent service outages could remain a possibility. Of course the ILEC VP/VC design will also have a significant direct impact upon competitor's network designs.

As noted, there are a number of potential problems with the ATM approach to providing competitive services over the Feeder 1 Transport portion of the loop. In particular, it is vital that availability guarantees and performance oversight be provided to CLECs. However, an ATM over Fiber UNE is nonetheless a readily available model for opening the door to competitive services today and should be designated and made available without delay.

C. Fiber Wavelength UNE

Deploying WDM or DWDM (Dense Wavelength Division Multiplexing) equipment at COs and RTs would solve many of the problems associated with using ATM as a Feeder 1 solution and enhance the ability of the network to support vibrant competition. Instead of using Virtual Circuits to share bandwidth among a number of different service providers, WDM technology enables the ILEC to carve out discrete wavelength paths (sometimes called Lambdas) across the fiber optic cable. This has the beneficial effect of multiplying the overall capacity of the fiber cable by the number of new paths created. Thus, congestion QoS issues are completely avoided. WDM technology is quickly evolving beyond an expensive new technology to take its place as another option among the palette of choices available to carriers when designing networks. ILECs should keep the pro-competitive benefits mentioned in mind as they design their own networks and, regardless of when this technology becomes commonplace in the outside plant, a UNE should be established so that competitive providers can benefit from its deployment.

D. Channelized Fiber UNE

Another new fiber UNE that should be designated and made available immediately is based upon the use of inveterate TDM technology. TDM systems are used to provide DS-1, DS-3 and OC level circuits that, literally and figuratively, form the backbone of telecommunications networks today. As with ATM (and perhaps more so), this technology should be readily available without the need for further technology investment by an ILEC. In fact, this is the technology already used at RT locations to deliver POTS service, T1 service, or to provide the backhaul for any UNEs delivered via an NGDLC (see Figure 1 above or Figure 5 below). As with the other configurations above, use of this readily available technology should be made available on an unbundled basis.

E. Broadband Fiber Loop UNE (End-to-End DSL UNE Including Fiber-in-the-Loop)

In addition to new Fiber UNEs that address the Feeder Transport element on an unbundled basis, UNEs providing end-to-end DSL capacity must also be designated and immediately made available. There is a clear precedent for the establishment of these UNEs: the venerable 4 Wire Digital UNE.

In a nutshell, the 4 Wire Digital UNE has been used since its establishment to provide T1 level access from a customer site to CLEC equipment (hardware that to date has nearly always been collocated within the CO). This UNE is a cornerstone of CLECs' ability to compete with ILECs in the area of advanced services. As with the 2 Wire Analog UNE discussed in the introduction (Figure 2), an inspection of how 4 Wire Digital UNEs are provided today is key to understanding the need and precedent for a new end-to-end DSL UNE that incorporates one or more fiber components.

Traditionally 4 Wire Digital UNEs have been provided with just what one would expect: four wires along with some digital equipment necessary to provide the appropriate signaling. Specifically, this equipment consists of electronics at the CO, at the customer premises (a device known as the SmartJack), and, in all longer loops, at distributed intervals along the cable route where repeater systems are used to regenerate the signal (top of Figure 5). In fact, a majority of 4 Wire Digital UNEs deployed today use HDSL electronics to provide the T1 circuit.

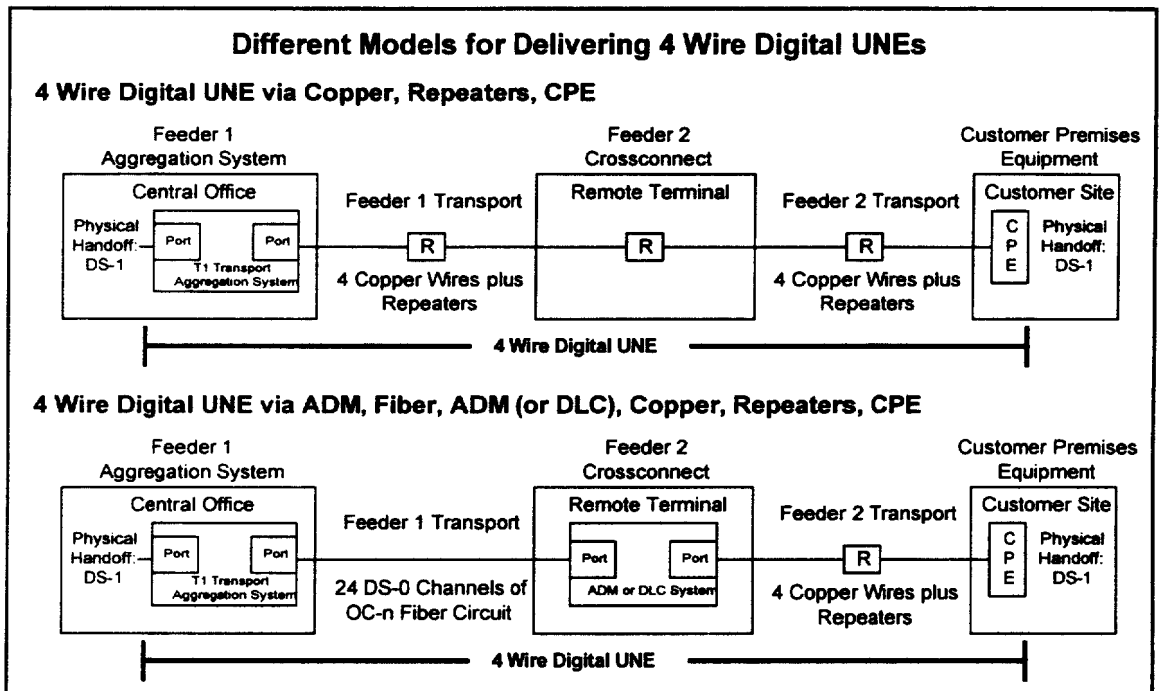

Figure 5

This approach contrasts with how increasing numbers of T1 circuits are provided today when fiber is present in the loop (bottom of Figure 5). In these scenarios, the traditional method of providing the UNE does not begin until the RT serving the customer (again, typically using HDSL systems). Between this site and the CO, additional electronics are

used to multiplex the signal over a fiber optic cable using TDM techniques (see the Channelized Fiber UNE model, above).

New End-to-End DSL UNE Incorporating Fiber-in-the-Loop

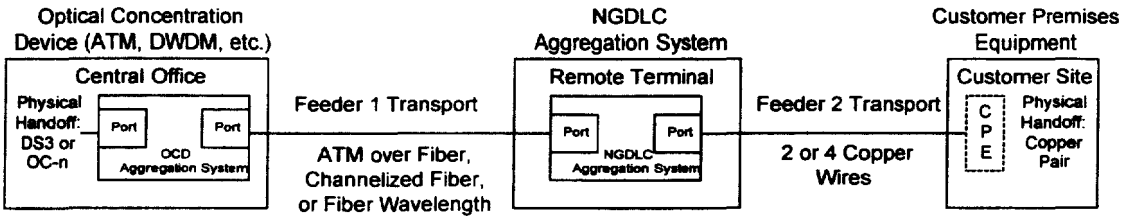

Figure 6

The case for the use of end-to-end UNEs has been clearly established and is readily applied to new DSL UNEs including HDSL as well as other DSL technologies. While the nature of DSL systems may preclude the use of identical handoffs at both ends of the circuit (*i.e.*, a customer may receive a DSL circuit while the CLEC may get a corresponding PVC or other non-DSL handoff at the CO), this nonetheless remains a viable approach. Any of the Fiber UNE options outlined above become alternatives for the Feeder Transport component connecting the RT with the CO (Figure 6).

F. NGDLC Aggregation UNE (for use with CLEC owned NGDLC Line Card)

Another approach for obtaining competitive interconnection is made possible when CLECs are allowed to co-locate their own line cards in an ILEC NGDLC system. Here the NGDLC itself must be unbundled so that the aggregating functionality of the NGDLC is available as an element separate from whatever line card happens to be installed to serve a customer. Using this configuration, a traditional UNE is used for the customer side of the CLEC collocated line card (DSL, 2 Wire Analog, 4 Wire Digital, etc.) while the new NGDLC Aggregation UNE includes Feeder 1 Transport and CO aggregation system components. Again, this UNE should be designated and made available immediately.

NGDLC Aggregation UNE

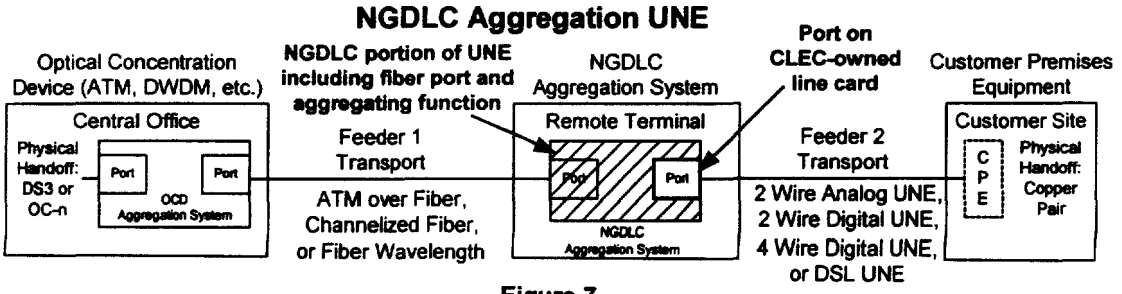

Figure 7

V. CONCLUSION

The inclusion of new technologies in the PTN highlights the need for continually evolving UNEs to maintain competitive and open access. Initiatives such as SBC's

Project Pronto herald a new age in outside plant design where network intelligence is placed outside of the CO and closer to customers, thus enabling the delivery of enhanced services while simultaneously erecting new barriers to competition. Providing competitors unrestricted access to both the networks of the future and the legacy networks in place today is essential to avoid limiting the creation of the new services enabled by these new technologies and thus provide customers the greatest degree of choice.

The functional model described in this paper serves as a guide for the creation of new UNEs of which only a few examples have been touched upon here. This model reaffirms the logic of the current UNEs and identifies new UNEs based on an understanding of the roles played by new technologies and their interaction with existing infrastructure.

CERTIFICATE OF SERVICE

I, Candise M. Pharr do hereby certify that on this 11th day of October, 2000 the foregoing Comments of Mpower Communications Corporation were delivered by hand and first class mail to the following:

Candise M. Pharr

VIA HAND DELIVERY
Magalie Roman Salas
Secretary
Federal Communications Commission
The Portals - TW-A325
445 12th Street, S.W.
Washington, DC 20554

VIA HAND DELIVERY
Janice Myles
Common Carrier Bureau
Policy & Program Planning Division
445 12th Street, SW
Washington, DC 20554

VIA HAND DELIVERY
International Transcription Service, Inc.
1231 20th Street, NW
Washington, DC 20036

352489.1