ATTACHMENT 3

85172

DEPARTMENT OF TRANSPORTATION

Office of the Secretary

[OST Docket No. OST–2000–7538]

Notice of Test Plan for Determining Potential for Interference from Ultra-Wideband Devices (UWB) to Global Positioning System (GPS) Receivers; Review and Comment

AGENCY: Office of the Secretary, Department of Transportation.

ACTION: Notice.

SUMMARY: Since the potential for interference from certain ultra-wideband (UWB) parameters has been determined through preliminary analyses and tests, the Department of Transportation has sponsored a more rigorous test to evaluate the potential for interference to Global Positioning System (GPS) receivers from UWB devices. The Department invites comments on this test plan.

DATES: Comments should be submitted in written form July 24, 2000.

ADDRESS: Send comments to: Department of Transportation, Office of the Secretary Radionavigation & Positioning Staff, P–7, Room 10315; 400 Seventh Street, SW., Washington, DC 20590 Attn: GPS–UWB Comments.

FOR FURTHER INFORMATION CONTACT: Sally L. Frodge, (202) 366–4894.

SUPPLEMENTARY INFORMATION: The Federal Communications Commission (FCC) is considering placing UWB devices under Part 15 of the FCC Regulations under Title 47 of the Code of Federal Regulations and modifying these rules accordingly. The FCC released on May 11, 2000, a Notice of Proposed Rule-Making (NPRM), "In the Matter of Revision of Part 15 of the

Commission's Rules Regarding Ultra-Wideband Transmission Systems". The FCC has proposed "* * * permitting the operation of ultra-wideband (UWB) technology on an unlicensed basis" citing "* * * enormous benefits for public safety, consumers and businesses" (http://www.fcc.gov/Bureaus/Engineering_Technology/News_Releases/2000/nret0006.html). The FCC has stated that test results are encouraged and can be submitted through October 30, 2000.

The term "ultra-wideband" by definition refers to any radiated waveform whose fractional bandwidth is greater than 25%. There are many technologies that fit this broad definition; of particular interest is a group of technologies known as "impulsive systems". Such systems utilize short radio frequency (RF) pulses with pulse durations on the order of nanoseconds that result in bandwidths that can be on the order of several Gigahertz. Some current UWB impulsive system designs and devices have fractional bandwidths that can exceed 100%. Such systems could intentionally radiate energy into restricted bands (defined in Part 15) that include aeronautical safety-related systems, including GPS and other sensitive systems.

This test plan describes an initial phase of testing that selects the metric of accuracy performance and GPS signal reacquisition time. Aviation receivers meeting published specifications will be used in the accuracy measurement phase; a land receiver will be used for the reacquisition testing. A GPS simulator provides the GPS input and the UWB parameters are provided by a prototype UWB waveform generator where the various UWB waveform parameters can be varied independently in a controlled manner. These metrics were considered appropriate for the first phase of testing.

Obtaining a copy for comment. The Department will consider written comments for incorporation into the test plan. To obtain a copy of this test plan, contact Ms. Veronica Pannell at (202) 366–0353 or write to: Department of Transportation, Office of the Secretary Radionavigation & Positioning Staff, P–7, Room 10315, 400 Seventh Street SW, Washington, DC 20590.

Dated: June 15, 2000.

Joseph Canny,

Deputy Assistant Secretary for Navigation Systems Policy.

[FR Doc. 00–15812 Filed 6–21–00; 8:45 am]

BILLING CODE 4910–62–P

Time Domain Corporation
7057 Old Madison Pike
Huntsville, AL 35806
256-922-9229

July 24, 2000

Department of Transportation
Office of the Secretary
Radionavigation & Positioning Staff, P-7, Room 10315
400 Seventh Street, S.W.
Washington, D.C. 20590
Attn: GPS-UWB Comments

Re: Ultra-Wideband Testing by DoT

Dear Radionavigation & Positioning Staff Members:

Time Domain Corporation respectfully submits these comments on the testing plan prepared by personnel from Stanford University entitled *Potential Interference to GPS from UWB Transmitters, Test Plan - Version 4.5* (the "Stanford Plan")[1] in response to the invitation extended in the Public Notice of June 22, 2000, 65 FR 38874. Because of the importance of Global Positioning System (GPS) applications and the promise of ultra-wideband (UWB) technologies, the Federal Communications Commission expects to receive the test results it asked to be conducted by October 30, 2000. To aid the FCC in reaching sound UWB implementation decisions, the testing that DoT has proposed must be carried out in a scientifically rigorous and objective manner.

Summary

The Stanford Plan is fundamentally flawed and will not provided meaningful assessment of potential interference:

- The plan does not provide for any correlation to real world environments (e.g., ambient noise levels) nor does it compare intentional and unintentional UWB interference.

- The plan tries to equate all UWB signals with "white" noise.

[1] For ease of reference, a version of the Stanford Plan with line numbers in the margin is provided with these comments. The citations in these comments reference that version.

- The plan does not propose to test a signal such as that produced by Time Domain's and other's equipment.

- The plan proposes to subject the white noise signal to filtering prior to injecting it into the GPS receiver, but does not propose to route the UWB signal through the same sort of filter.

- The plan offers no justification for its one second reacquisition criterion for land based receivers.

- The plan fails to state that the testing will be conducted using a GPS simulator operating with a realistic constellation of satellites, giving rise to the presumption that the evaluation will examine the effect of UWB on only one satellite signal that will have been adjusted to a received power of less than 4 dB above the thermal noise floor – hardly a realistic scenario.

- The plan exhibits a clear bias by arguing that any margin has already been consumed by the –70 dBW/MHz out-of-band emissions limit applicable to mobile satellite transceivers; by crippling the GPS link with high levels of noise; and then testing for the impact of UWB.

Unless these deficiencies are corrected, the Stanford Plan will not yield the sort of information that will assist the FCC in reaching sound decisions concerning the implementation of UWB technology.

Overview

Both the overall assumptions and the design of the Stanford Plan rest on the foregone conclusion that there will be harmful interference and that this effort ensures that this is the case. The Stanford Plan, for example, devotes a substantial amount of text to arguing that the -70 dBW/MHz out-of-band signal level applicable to Mobile Satellite Service (MSS) transceivers consumes any margin that may exist. This argument is misplaced. While GPS proponents may assert – as they have in other FCC proceedings – that the -70 dBW/MHz level should not apply in the case where other emissions fall into GPS spectrum, this testing effort involves assessing the impact of UWB emissions, not MSS transceiver emissions.

The testing should examine the actual impact of UWB signals on GPS receivers, but does not. To begin with, the plan proposes to correlate broadband noise with UWB signals, while choosing to only filter the broadband noise signals. This unequal filtering approach will likely show a reduced impact of broadband noise, as compared to UWB.

Even assuming that such a comparison is appropriate, one cannot conclude that the broadband noise signal introduced as a comparison signal will resemble the GPS ambient environment or an actual white noise source as the plan suggests. Moreover, the Stanford Plan offers no confirmation that the proposed broadband noise signal resembles the actual ambient environment in which GPS systems operate. It is possible that UWB emissions will interact differently with actual noise signals in the GPS band . Therefore, at a minimum, a better approach would be to characterize the interference effects from the broadband noise source separately from the UWB signal source – by testing each separately. Further, the Stanford Plan's total reliance on simulator testing fails to afford any check on the assumptions that underlie the proposed testing. As one example, the Plan does not make clear whether the simulator consists of more than a single channel receiver. To the extent that the GPS simulator attempts to approximate a typical GPS receiver, it must include more than a single channel, for a typical GPS system receives eight or more satellite signals. For these and the other reasons discussed below, the plan should be revised if it is to have scientific value.

The Need for Real-World Testing and Verification

The Stanford Plan is aimed at collecting data based on worst case scenarios (*see* Stanford Plan page 3, lines 17-44; page 2, lines 39-42) not likely to be encountered in real world operating conditions. It does not include any "over the air" tests of the potential interference caused by radiated UWB transmitters – the only way that interference can actually occur. All of the testing will be performed in a laboratory environment, by directly connecting the UWB and noise sources to the input of a GPS receiver. While the use of a GPS signal simulator provides the control needed to isolate variables, radiated emissions testing is needed to quantify adequately the true impact on GPS receivers and to validate (and where necessary, modify) the laboratory configurations. For example, the laboratory tests must sufficiently model the radiated effects of both GPS and UWB antennas, as antenna effects can significantly impact test measurements. Another example of major factors in typical GPS links is multipath.

The theoretical foundation of the Stanford Plan is suspect. The Plan states that the GPS Receiver RFI Susceptibility Limit is -170.1 dBm/Hz – only 3.9 dB higher than the thermal noise floor of -174 dBm/Hz. At this level, all FCC Part 15 compliant Class A and B digital devices (*e.g.*, computers, radio receivers and intentional radiators) as well as a host of incidental radiators (*e.g.*, motor-driven appliances) will have to be turned off within restricted areas of operation, such as in and around airports. If the -170.1 dBm/Hz GPS Receiver Susceptibility Limit had a relation to real-world impact, one would expect to find that GPS Systems would already have difficulty operating – regardless of UWB equipment. Moreover, there are a number of other RF systems that are legally permitted to radiate even higher powered signals within the GPS bands, including out-of-band and

spurious emissions from TV stations, land mobile communications systems, and ISM equipment.

Applying the test results from the Stanford Plan, in its current form, to the development of protection criteria will therefore be misleading. This test plan, like any scientific study, should focus on a single variable at a time while maintaining constant other factors. Following this scientific principle, the test plan should analyze only the impact of UWB transmitters on GPS receivers.

Further, the test plan states that the entire 5.6 dB margin is consumed by other aeronautical services (*see* page 4, line 7). This leaves no margin for UWB signals. The Stanford Plan asserts the pre-conceived bias that the Mobile Satellite Services (MSS) 1610-1626.5 MHz (earth-to-space) band alone prevents UWB from existing with GPS systems. Time Domain questions the use of such an assumption. The title of this study as published in the Federal Register is "Test Plan for Determining the Potential for Interference from UWB to GPS Receivers," 65 FR 38874 (June 22, 2000). MSS and other emitters should not be a factor at this stage of the testing. Other systems properly come into play when analyzing a real-world scenario, which, as Time Domain has already noted, includes the effects of ambient noise interference, which includes other RF systems.

Consider another example of attempting to equate theoretical design parameters with real-world impact. The Stanford Plan contemplates using GPS reacquisition performance, a "critical performance metric" for "real-time land applications," to quantify the impact of UWB transmissions. *See* page 3, lines 1-6; *see also* page 8, lines 33-37. However, the Stanford Plan fails to explain how the one second reacquisition performance metric was derived other than to say that the one second figure rests on the authors assumptions as to land operating scenarios. *See* page 8, lines 33-37; page 11, lines 1-3. It is unclear whether any study was conducted to determine the adequacy of such a metric. In fact, one commonly available GPS land receiver we encountered specified a 15 second warm-start acquisition time and a 45 second cold-start acquisition time. Furthermore, emergency response vehicles and in-vehicle navigation systems are designed to deal with signal lock loss (hence the genesis of the "reacquisition" performance metric) caused by a number of factors, including environmental obstructions. If a UWB transmitter is not on-board the vehicle and operating in a manner that couples into the external GPS antenna, any impact on signal reacquisition will be transitory as the vehicle moves. The vehicle would likely be out of any zone of potential UWB interference in under a second. In any event, GPS systems are designed to deal with – and do deal with – these situations on a regular basis.

The Stanford Plan also appears to have made an assumption that, at this stage of the testing, it is only worth considering the reacquisition parameter in connection with land operation. Once the time has been expended to configure a test setup, taking

measurements of pseudo-range accuracy, initial acquisition time and carrier phase data (*see* page 8, lines 26-27) would be relatively simple tasks and would likely yield additional useful data points.

Not All UWB Signals Can Be Equated With Broadband Noise

Curiously, the Stanford Plan states that it "does not define the interference scenarios" (*see* page 6, line 40-42), while at the same time it claims to develop an RFI equivalence concept "to relate the interference impact of UWB signals on GPS" through use of a well-known RFI broadband source. *See* page 6, lines 5-11. The Stanford Plan asserts that it is possible to equate the broadband noise power with UWB transmitter power. *See* page 6, at lines 36-39 ("if during the broadband noise equivalence test, a 4 dB increase in broadband noise also corresponds to a 4 dB increase in UWB transmitter power, for the same accuracy degradation value (15 cm) then UWB source may be classified as noise like."). Before conducting the procedure to determine equivalence of UWB with broadband noise (*see* page 6, lines 12-22), it makes sense to determine if there exists a linear relationship between the broadband noise and UWB sources, *i.e.,* can one be used as an adequate replacement of the other. (Item 3 on page 6, at lines 36-39, presupposes a linear relationship.) The existence of such a relationship, on which much of this testing depends, can potentially be determined by first finding the UWB source level that causes 15 cm of deviation, then decreasing it by 2 dB, and replacing the UWB source with broadband noise to cause the same 15 cm deviation. If more or less than a 2 dB compensation level is needed, then the relationship between the two sources is not linear and a new analysis criteria must be developed. Nonetheless, even if the result here showed equal compensation levels, use of such a test configuration is questionable in light of the different methods of measuring UWB transmitter power levels. A better approach would be to characterize the interference effects of each source separately.

It is only possible to classify as noise-like some UWB transmitters, *i.e.,* randomly time-dithered sources in bandwidths narrower than the pulse repetition frequency (PRF). Because the methods of quantifying UWB signals are still under question, the modeling approach in the Stanford Plan rests on several still undetermined grounds, again stressing the need for real-world testing to adequately quantify effects on GPS systems as measured in a laboratory. It simply cannot be assumed that the laboratory assumptions and conditions are accurately modeling reality; these assumptions must be validated with "over-the-air" testing.

Indeed, all interference effects measured by the Stanford Plan will be in combination with broadband noiseWhen coupling an UWB signal and broadband noise, the testing will show more interference potential than analyzing the UWB source alone. White noise can have peaks of up to 14 dB which can make it difficult to quantify the isolated impact of UWB.

The Plan states that the broadband noise source will be used to not only correlate the impact of UWB emissions to white noise, but that it is intended to be representative of "the actual GPS environment." *See* page 6, lines 10-11; *see also* page 8, lines 13-19. As Time Domain has stated above, the other RF signals that are present in the GPS band do not appear to be white noise-like, and therefore this assumption is likely invalid. Additionally, the Stanford Plan provides no justification of why the noise source is filtered and the UWB source is not.

Moreover, the Stanford Plan discusses measuring noise power and total noise power without delineating the technique used. *See* page 11, line 28-31; page 13, lines 20-26, line 34-36; page 15, lines 27-34, 43-45; page 16, lines 17-21. The method of measuring noise levels is a critical factor – and with regard to UWB technology, an open issue. In any event, the method used must be delineated, *e.g.,* spectrum analyzer, power meter, peak power levels, average RMS levels.

In sum, the Stanford Plan makes no attempt to address the actual impact of UWB emissions on GPS receiver performance. Instead of using a model based on the existing environmental levels of ambient background signals, the Plan uses a filtered noise source operated at levels sufficient to cause GPS receiver errors. The Stanford Plan should be revised to include real-world testing to verify the assumptions inherent in the simulator testing. The testing configuration should measure the UWB signal level required to produce interference in GPS systems as a function of variations in the existing ambient noise levels with the GPS system receiving actual satellite signals. We strongly recommend that the DoT review the GPS susceptibility test plan developed the Applied Research Laboratory, the University of Texas as an example of a test plan based on scientific principles.

Sincerely,
Time Domain Corporation

/s/

Paul Withington
Vice-President for Standards & Testing

Enclosure: (Stanford Plan)

Potential Interference to GPS from UWB Transmitters:

Test Plan -- Version 4.5

Phase 1:

Accuracy Test for Aviation Receivers and Reacquisition Time Test for Land Receivers

Ming Luo, Dennis Akos, Sam Pullen, Per Enge
Stanford University

Table of Contents

1.0 Background 2
2.0 Introduction to Test Plan 6
3.0 Test Scope 8
4.0 Overview of Test Procedure 10
4.1 Calibration 10
4.2 Receiver Normalization 10
4.3 Receiver Operating Points 10
4.4 UWB Interference Measurements 11
4.5 Reporting 11
5.0 Accuracy Test Procedure for Aviation Receivers 13
5.1 Broadband Random Noise Normalization 13
5.2 Procedure for Testing Potential UWB Impact on GPS Accuracy 13
6.0 Reacquisition Time Test Procedure for Land Receivers 15
6.1 Broadband Random Noise Normalization 15
6.2 Reacquisition Time Test with UWB Noise 16
Appendices:
A. Figures 17
B. Calibration 24

1.0 Background

The Global Positioning System (GPS) is fundamental to the critical infrastructure of the United States (US) and internationally. GPS is a fully operational service that provides a global source for accurate timing and positioning, 24 hours a day. GPS is presently used by aviation for the en-route and non-precision landing phases of flight. GPS is currently used within the US for precision approach and landings and is in the final stages of approval as a national and international standard. Companion GPS-based applications for runway incursion and ground traffic management are also underway. Additionally, GPS-based public safety systems and services are fielded. Planned or newer systems, such as Enhanced 911 (E911) and personal location and medical tracking devices are soon to be commercially available. Additional future systems are planned for land, marine and space applications. The US telecommunications and power distribution systems are dependent upon GPS for network synchronization timing. Further, GPS is a powerful enabling technology that has created new industries and new industrial practices fully dependent upon GPS signal availability and continuity. Several critical industries, both aviation and non-aviation, would incur adverse impact if there were degradation to GPS signal continuity and availability.

UWB technology is based on very short pulses of radio energy. Its wide signal bandwidth yields excellent multipath immunity. UWB technology has potential in a variety of applications including communication and ranging, and is expected to see increased civil use in the future. The UWB technology was the focus of the Notice of Inquiry (NOI) of the Federal Communications Commission (FCC) under the Office of Engineering and Technology (OET) entitled "Notice of Inquiry in the Matter of Revision of Part 15 of the Commission's Rules Regarding Ultra-Wideband Transmission Systems", FCC Docket Number (No.) 98-208/ET No. 98-153.

Because GPS has a pivotal role in so many critical systems that the public depends upon for its safety and well being, it is necessary to determine what the potential for interference is from ultra-wideband (UWB) systems to GPS. Preliminary analysis and testing has indicated a potential for interference from some types of UWB sources to GPS reception. These preliminary findings call for the performance of controlled testing to determine the nature and extent of the potential for interference to GPS from selected UWB parameters in order to assure public safety and safety-of-life. Without test results, such an assurance cannot be made with full confidence since preliminary analysis has shown a potential for interference from UWB to GPS and other systems, including fielded aviation systems.

The aviation community has a large body of developed and published technical standards for GPS and defined interference criteria making it logical to initiate the first phase of testing for aviation based on this large body of work. Additionally, due to the critical role of many non-aviation GPS-based applications, this test phase also addresses some issues of land receivers.

This test phase selects the metric of accuracy performance and GPS signal reacquisition time. Aviation receivers meeting published specifications are used in the accuracy measurement phase; a land receiver will be used for the reacquisition testing. A GPS simulator provides the GPS input and the UWB parameters are provided by a prototype UWB waveform generator where the various UWB waveform parameters can be varied independently in a controlled manner. These metrics were considered appropriate for the first phase of testing. Accuracy measurements also include the deleterious effects of cycle slips, and are an appropriate metric not only for precision approach but other demanding applications as well, for example, machine guidance.

Reacquisition, while important to many aviation applications, is a critical performance metric for dynamic, real-time land applications, such as emergency medical response vehicles, other public safety vehicles and in-vehicle navigation. Reacquisition is also a critical performance metric for marine applications in harbor and harbor-approach areas. Particularly under extreme weather conditions, these systems can be the lifeline of a successful search-and-rescue situation or can be the measure preventing the initial event of the accident.

A full testing program would include not only aeronautical systems, but systems critical to land and sea operations. We note that systems such as radio astronomy and private sector systems should be looked at to determine whether there is potential for interference from UWB systems operating under any proposed rules. Test results can be inculcated into the technical rules, support appropriate regulatory actions and other associated decisions. It is also important to consider the current role that GPS plays in the consumer market. Since many UWB proposals are for consumer-grade products, it is important to assure that already existing GPS-based consumer products are included in an appropriate manner in the analysis and decision-making process.

The first phase of the test program concentrates on the aeronautical applications of GPS L1 signal, centered at 1575.42 MHz. These tests are necessary to evaluate the impact that UWB device emissions could have on safety-of-life aeronautical systems that are based on the GPS Standard Positioning Service (SPS), the Wide Area Augmentation System (WAAS), and the Local Area Augmentation System (LAAS). Allowable levels of interference are already specified in the LAAS Minimum Performance Standards (MASPS) and the WAAS and LAAS Minimum Operating Performance Standards (MOPS) interference "masks". Appropriate reference documents include:

1. *Assessment of Radio Frequency Interference Relevant to the GNSS,* January 27, 1997 (RTCA DO-235).
2. *Minimum Aviation Performance Standards for the Local Area Augmentation System,* September 28,1998 (RTCA/DO-245).
3. *Minimum Operational Performance Standards for Global Positioning System/Wide Area Augmentation System Airborne Equipment,* October 6, 1999 (RTCA DO-229B or the GPS/WAAS MOPS).
4. *Minimum Operational Performance Standards for GPS Local Area Augmentation System Airborne Equipment,* January 11, 2000, (RTCA DO-253 or the GPS/LAAS MOPS).
5. *Technical and Performance Characteristics of Current and Planned RNSS (space-to-earth) and ARNS Receivers to be Considered in Interference Studies in the 1559 to 1610MHz,* International Telecommunications Union (ITU) Document 8/83-E, April 29,1999
6. International Civil Aviation Organization (ICAO) Global Navigation Satellite System Panel (GNSSP) SARPs, *Resistance to Interference Section B.3.7*
7. *Technical Standard Order C129, Airborne Supplemental Navigation Equipment Using the Global Positioning System (GPS)*, TSO C129, USDOT Federal Aviation Administration, December 1992.
8. *Global Positioning System - Standard Position System Signal Specification*; 2nd Edition; June 2, 1995.

Table 1 highlights the parameters used to derive the limits on out-of-band (OOB) emissions from Mobile Satellite Service (MSS) Mobile Earth Terminal (MET) in order to protect aeronautical GPS receivers used for Cat I precision approaches.

Table 1. GPS L1 Receiver RFI Susceptibility Link Budget for Single MSS MET Interference for Category I Landings

Parameter	Value	Units
MSS Emissions Limit[1]	–70	dBW/MHz
100 ft Path Loss[2]	–66.1	dB
GPS Antenna Gain in Direction of RFI[3]	–10	dB
MSS RFI @GPS Receiver	–146.1 –206.1	dBW/MHz dBW/Hz
Aeronautical Services Margin[4]	5.6	dB
GPS Receiver RFI Susceptibility Limit	–140.5 –200.1	dBW/MHz dBW/Hz

[1] This value was determined for Mobile Satellite Services (MSS) only, for the 1559-1610 MHz band.
[2, 3] This parameter was determined for one MSS emitter and one GPS receiver onboard an aircraft for Category I; it may not be appropriate for all pertinent aviation or non-aviation operational scenarios.
[4] This margin will be absorbed by other aeronautical services.

As noted in Table 1, the total RFI susceptibility limit is –140.5 dBW/MHz. RTCA SC-159 is currently finalizing the link budget for Category II/III approaches and landings that will be similar in nature. It is expected that aeronautical interference sources external to GPS and the additional receiver hardening required for Category II/III approach and landings will consume the entire 5.6 dB aeronautical services margin. This 5.6 dB margin results in a C/N_0 margin of only 3.2 dB for the LAAS application (as detailed in Reference 5, Annex 5).

Due to the adoption of a -70 dBW/MHz limit by the FCC for the MSS MET, the total level of -146.1dBW/MHz is taken up by the MSS earth-to-space services leaving no margin for the UWB emissions or other new technologies that may be proposed in the future. In order to appreciate why the GPS Category I link budget has a lack of margin it is necessary to provide additional background on the allowed RFI allocation process and the integrity monitoring design of the GPS receiver.

For a MOPS-compliant GPS receiver (i.e., the receiver operates at the minimum standard), the significance of the susceptibility limit is that any combined *non-aeronautical* RFI exceeding -146.1dBW/MHz is likely to cause an alert leading to loss of continuity. In other words, the performance of minimally MOPS-compliant receivers will fall short of requirements and may generate Harmful and Misleading Information (HMI) in the absence of navigation alert. The MOPS specifies that all combined non-aeronautical RFI below -146.1 dBW/MHz shall not cause a loss of continuity. GPS receivers that surpass the MOPS requirements must issue a loss-of-continuity alert when RFI exceeds -146.1 dBW/MHz and a navigation hazard is present; the hazard must be detected and alerted so that users are not threatened by it.

The aeronautical community is concerned because there is no margin available in the -140.5dBW/MHz susceptibility limit for non-aeronautical RFI from other sources such as UWB devices since all available margins were allotted to a single MSS MET. For instance, there also is no margin for the World Radiocommunication Conference of 1997 (WRC- 97) Inmarsat proposal to operate space-to-Earth MSS satellites in the 1559-1567 MHz band. The issue is still on the WRC-2000 agenda.

These statements are true even for a device that conforms to Part 15 limits. For example, the FCC spurious emissions of a Part 15 device must be below -71 dBW/MHz in the GPS band. This results in an RFI level of -147.5 dBW/MHz at 100 feet. See Table 1. Since MSS METs and

UWB device emissions may combine at the aircraft, the resulting RFI level would be -143.56 dBW/MHz. After including 5.6 dB of aeronautical signals, the RFI level would be -138 dBW/MHz, or 2.5 dB above the allowed level of -140.5 dBW/MHz. This reduces the safety margin reserved for aviation use to an unacceptable level.

Furthermore, the above RFI scenario does not include any effects from multiple MSS METs, multiple UWB devices, VHF harmonics, or other systems. It identifies a receiver-emitter proximity for a single, critical aeronautical application i.e. Category I precision approach and landing. The range of aeronautical use of GPS has evolved and requires examination of the range of the receiver-emitter proximity to assure that this range and the other parameters listed (see Table 1) protect all aeronautical use of GPS. Further, these parameters must be examined for appropriate non-aviation operational scenarios to assure that appropriate public safety services will be protected. To achieve this work, the appropriate operational scenarios must be developed to provide the framework into which the technical results of testing can be applied. This is true for any service, aviation or non-aviation.

It is planned to include study of the aggregate effect of multiple UWB emitters in a later study phase, pending funding. Certainly to determine the appropriate protection limits for systems that may be potentially affected, the aggregate effect must be somehow determined.

The above discussions described the link-budget margin for receivers used in a given aeronautical safety-of-life scenario. For non-aeronautical applications the scenarios are under discussion. Critical scenarios also include non-aviation safety-of-life and public safety services, such as ambulance and E911 services. In the ambulance scenario the possibility arises where terrestrial GPS receivers, MSS hand-held cell phones and UWB devices may operate simultaneously at very close ranges. If interference between these systems occurs, all services can be adversely impacted not only technically but economically as well.

Importantly, appropriate operational scenarios be developed for aviation and non-aviation applications. The test plan will collect interference effects data using both aeronautical and non-aeronautical receivers that when combined with the appropriate protection limits will allow the analysis of any appropriate scenario.

2.0 Introduction to Test Plan

The goal of this test plan is to characterize the interference effects of UWB emissions on various types of aviation and non-aviation GPS receivers in a controlled test environment. Some UWB emissions could be quite noise-like while others may have more discrete spectral lines in the vicinity of GPS. An RFI equivalence concept was developed to relate the interference impact of UWB signals on GPS over this range of UWB emissions to that of a known and well understood RFI source, i.e., broadband noise. The method chosen for this test plan is to determine the UWB interference effect for a given set of emission parameters that is equivalent to a known portion of the broadband noise input which causes the GPS receiver to just meet its performance criterion. A significant level of broadband noise is input to give a representation of the actual GPS environment.

The test criteria consist of pseudorange measurement accuracy for aviation receivers and reacquisition time for non-aviation receivers. The pseudorange accuracy criterion for aeronautical GPS receivers is a standard deviation of less than 15cm[1]. The equivalence concept test methodology consists of inserting broadband noise into the GPS receiver and increasing its level until 15 cm of pseudorange standard deviation is indicated. The broadband noise source is then reduced 2 dB and the UWB emission level is increased by varying one of the UWB parameters (e.g. power) until there is a 15 cm pseudorange standard deviation indication. The above procedure is repeated with the broadband noise source reduced by 4 dB instead of 2 dB. Another UWB parameter (e.g. PRF) is chosen and the entire sequence repeated until all UWB parameters have been investigated. From this interference effect data, a profile of those UWB parameters that have the most significant effect on GPS accuracy performance will emerge.

This process provides accuracy data at three different levels of broadband noise (100%, 63%, and 40% of the critical noise input) in combination with three different levels of UWB RFI (0%, 37%, 60%). These data capture the RFI effects on the GPS receiver that can be used in external derivations of the UWB protection level appropriate for GPS. An equivalent process is used for a non-aeronautical receiver with a one second acquisition time as the test criterion.

Three potential benefits from determining the equivalence of UWB transmissions with broadband noise are:

1) a simple test procedure;
2) interference effects data that can use information from specific interference encounters (e.g., range, antenna orientation and gain, source motion) and UWB source information to determine compatible UWB scenarios that satisfy the protection limit; and,
3) if during the broadband noise equivalence test, a 4 dB increase in broadband noise also corresponds to a 4 dB increase in the UWB transmitter power, for the same accuracy degradation value (15 cm) then UWB source may be classified as noise-like. In such cases a simple calculation of broadband noise sources can determine UWB protection limit.

It should be noted that this test plan does not:

1) define the UWB protection limits; or,

2) define the interference scenarios.

[1] Reference Document 4, paragraph 2.3.6.8.1, page 34

Also a separate effort, not a part of this test, is necessary to determine effective UWB emission measurement techniques, since existing methods (e.g., FCC Part 15) tailored for older technologies are likely inadequate. As testing proceeds, detailed notes will be taken and developed into appendices if warranted to clarify the details of the various aspects of this testing approach.

Further testing for GPS must include at a minimum other receiver types such as fielded aviation equipment based on TSO C129 standard, include the aggregate effect of multiple UWB emitters, and address the additive affect of other systems and their out-of-band emissions. Note that it is important to test with actual UWB equipment to validate these results and add additional parameters reflective of current UWB technology. Future testing should be accomplished to look at discrete and continuous spectra, noting that some UWB equipment is a combination of the two.

3.0 Test Scope

The test plan for this phase of testing includes an accuracy test for aviation receivers and a reacquisition time test for land receivers, and these tests will be sequenced as follows:

1) Accuracy test for aviation receiver #1
2) Accuracy test for aviation receiver #2
3) Reacquisition time test for land receiver #3
4) Accuracy test for aviation receiver #1 with a pseudolite sharing the channel
5) Reacquisition time test for land receiver #4
6) Reacquisition time test for land receiver #3 (or #4) with a pseudolite sharing the channel

In all cases, the tests will quantify the RFI impact of UWB signals relative to that of a known amount broadband random noise. In this plan, broadband random noise will refer to continuous noise from a noise diode that has power spectral density much broader than the RF/IF bandwidth of the GPS receiver. Such noise is used to model thermal noise in the receiver, sky noise and any other wideband interference process *other than* UWB. UWB signals also have bandwidths that are greater than the front end of the GPS receiver, but they have an additional structure that may cause their RFI effect to be very different than broadband random noise.

The receiver's C/N estimator will not be used to estimate total noise power for the following reasons. First, any given GPS receiver's C/N estimator may respond differently to broadband random noise than another receiver's estimator. Second, the estimators may respond differently depending on the UWB signal parameters.

Pseudorange measurement accuracy, acquisition/reacquisition times, and loss-of-tracking threshold are the four important performance metrics to GPS users. For this test phase, the metric selected is accuracy performance in an aviation receiver. The most demanding precision approach operations require a pseudorange measurement standard deviation of less than 15cm. Pseudorange measurement accuracy is influenced by degradations from both code and carrier tracking. As such it is the most sensitive metric for the aviation applications.

Acquisition/reacquisition time is an important metric for most land users. For example, in-vehicle navigation and emergency vehicles need to quickly reacquire GPS after signal loss and develop a new position estimate. For this reason, emergency land applications require reacquisition times of approximately 1 second. The reacquisition tests described here assume that only one satellite is lost and must be reacquired.

These tests are crafted to provide input to a separate process that considers the operational scenarios that might place UWB and GPS equipment in proximity. Such scenarios may include the use of GPS to provide position reports with all E911 calls. They may also include the use of GPS to avoid runway incursions, or the use of GPS during the precision approach of aircraft. Each scenario has a link budget that *assumes* that the presence of certain types of interference. The test described will not develop the scenarios or the associated link budgets. Rather, they will provide data on the interference effects of various combinations of UWB signal parameters.

The RFI effect of the UWB signal will be sensitive to the details of the UWB signal design. Some of these trends are depicted in Figure 1. We anticipate that our interference measurements will reflect the following quantitative trends:

- Pulse Repetition Frequency (PRF): If the pulses are sent at a very low rate compared to the front end bandwidth of the GPS receiver, then the interference will be smaller than that due to UWB operation at high PRFs. Most GPS receivers have bandwidths between 2 MHz and 24 MHz. If the UWB PRF is less than 2 million pulses per second (MPPS), then the pulses will still be distinct at the output of the receiver front end and interference will probably be relatively small. If the UWB PRF is higher than the bandwidth, then the GPS front end will smear the pulses together and the interference effect will probably be larger. GPS receivers are well known to have lower sensitivity to pulsed interference and higher sensitivity to continuous interference.
- No Modulation: If the PRF is high, then the interference effect will depend on the UWB modulation. Some UWB signals may not be modulated. In this case, the signal is a pulse train with a constant time between pulses. This case is shown in Figure 2 and results in the line spectrum also shown in Figure 2. The GPS spectrum for the C/A code also has a line spectrum. UWB interference will be greatest when the UWB lines fall on top of the GPS spectral lines. UWB interference will be small when the UWB lines fall between the GPS lines. This spectral coincidence is difficult to predict and the UWB effect on GPS will be very variable.
- Pulse Modulation: If the UWB pulses are modulated randomly or with a long code, then the line spectrum will disappear. This effect is shown in Figure 3, which shows the amplitude spectrum for a UWB pulse train without modulation, with on-off-keying (OOK) and with pulse position modulation (PPM). If modulation is used with sequences that are continuous and have high PRFs, then the interference effect will be similar to white noise of equal power.
- Pulse Bursting: As shown in Figure 2, UWB pulses may be transmitted in bursts with a prescribed on-time and off-time. If the duty cycle (fractional on-time) is less than 40 percent or so, then we expect that the effect of one UWB transmitter on a GPS receiver will be reduced. The interference effect will also depend on the on-time of the pulse bursts.
- Pulse Shaping: As shown in Figure 4, the overall UWB spectrum depends on the pulse shape. The pulse can be crafted so that the UWB spectrum avoids certain critical bands.

All of these trends must be validated and quantified. To that end, these tests will vary the UWB signal parameters and determine how the UWB to broadband random noise equivalence depends on the UWB signal parameters. This test philosophy is depicted in Table 2 and Figure 5, which show four loops on the UWB signal parameters. The first loop simply varies the modulation from: no modulation to random OOK to random PPM. The second loop transmits pulse bursts with varying duty cycle. The third loop varies the UWB pulse repetition frequency (PRF). The final loop captures the effect of pulse shaping by varying the UWB power. These tests simply treat the UWB power level in the GPS band as an independent parameter.

Table 2: UWB Signal Parameters to be tested.[1]

UWB Signal Parameter	Range
Power (dBW/MHz)	As need to introduce the interference effects described below[2]
Pulse Repetition Frequency (MHz)	0.1, 1.0, 20.0
Modulation	None, random OOK, random PPM[3]
Burst Duty Cycle (%)	10, 50, 100
Burst On-Time	0.1 millisecond (msec), 1 msec, 10 msec

[1] The permutations listed in the table represent the current plan. Different values may be selected based on the early test results.
[2] The UWB test pulse spectra are depicted in Figure 4, where the pulse amplitude is controlled to introduce a known amount of UWB noise power in the GPS band.
[3] The random PPM will be such that no spectral lines remain and the spectrum is continuous.

4.0 Overview of Test Procedure

4.1 Calibration

We now describe the overall test procedure that is depicted in Figures 6 through 8. As shown in Figure 6, the test begins with calibration of: the GPS signal generator and signal path, the broadband random noise source and the UWB signal source. This procedure is described in the Appendix and will not be further detailed in the body of the test plan.

4.2 Receiver Normalization

Next, the receiver is normalized using the Test Setup shown in Figure 9. Accuracy and reacquisition time are measured as a function of input noise where the noise is entirely due to broadband random noise with no UWB component. This step establishes receiver performance in the absence of UWB noise and provides a baseline for later comparison.

All noise power measurements will be made using a bandpass filter that is based on the interference masks in the WAAS and LAAS Minimum Operational Performance Standards (MOPS). This measurement filter has a noise bandwidth of approximately 20 MHz. All accuracy and reacquisition time measurements will be made as a function of the noise power (N_0) as measured at the output of this standard filter. A current NTIA test program will relate increase in receiver noise using various receiver bandwidths as a function of UWB parameters.

The results from the receiver normalization will sample the curves shown in Figures 10 and 11. As shown, both accuracy and reacquisition time will degrade with increasing noise power. Each data point will require many measurements to establish statistical confidence. For the accuracy normalization, the number of measurements per sample will be large enough to provide a 95% confidence at the 1-centimeter level. For the reacquisition time normalization, the number of measurements will be large enough to provide a 95% confidence at the 0.5-second level.

The time required to establish these levels of confidence is receiver dependent. The samples must be statistically uncorrelated, and the time between such uncorrelated samples depends on the bandwidth of the receiver's tracking loop. Hence, this tracking bandwidth will be determined for each receiver under test and used to determine the time required to test each receiver.

To minimize test time, the accuracy tests will use code minus carrier measurements, where the code will not be smoothed by the carrier. These ***unsmoothed*** errors are greater than the errors using carrier smoothing. Moreover, the 15-centimeter (cm) requirement is based on 100 seconds of carrier smoothing. Hence, the 15-cm requirement must be inflated by the factor, k, shown in Figure 9. This factor is given by the noise equivalent bandwidth of the loop providing the unsmoothed measurements divided by the noise equivalent bandwidth with 100 seconds of carrier smoothing. This factor must be determined with care, because the ratio of these noise bandwidths is not necessarily given by the inverse of the ratio of their stated time constants.

4.3 Receiver Operating Points

The normalization curves depicted in Figures 10 and 11 will be used to determine the operating point for the UWB interference measurements. The accuracy test will be operated near the noise

power required for an accuracy of $k15$ centimeters. This power is denoted N_{ACC}. The reacquisition test will be operated near the noise power required for a reacquisition time of 1 second. This power is denoted N^*_{REACQ}. These operating points shall be determined to an accuracy of +/- 0.5 dB.

For accuracy, the UWB interference tests are initiated at broadband random noise powers given by N^*_{ACC} - 2dB and N^*_{ACC} - 4dB. For reacquisition time, the UWB interference tests are initiated at broadband random noise powers given by N^*_{REACQ} - 2dB and N^*_{REACQ} - 4dB.

4.4 UWB Interference Measurements

The UWB interference measurements are shown in Figure 7 and the Test Setup is shown in Figure 12. For future testing, the setup also has the capability to include signals from a pseudolite. As shown, UWB noise power is added to the broadband random noise. These tests are designed to provide data points on curves such as those shown in Figure 13 for accuracy and Figure 14 for reacquisition time. In both cases, the broadband random noise power (N_0) is decreased so that the noise power is at the operating points discussed above. From that operating point, UWB power is introduced to increase the total noise power (N_0+N_{UWB}). As shown in Figures 13 and 14, this degradation may or may not cause the performance curves to follow the curves for broadband random noise alone, and the exact trajectory will depend on the UWB signal parameters. If the specific UWB waveform has a more deleterious effect than broadband random noise, then the UWB trajectory will be higher than the broadband random noise curve. If the parameters are such that the UWB signal is less damaging than broadband random noise, then the UWB trajectory will fall under the broadband random noise curve. Both situations are depicted in Figures 13 and 14.

The UWB portion of the total noise power (N_0+N_{UWB}) will be changed in 1 dB steps. UWB noise power will be measured in the same standard filter described above. This practice requires that the UWB PRF be less than 20 Mpps. If the pulse rate is greater, then the UWB spectral lines may fall outside of the filter passband and the results will be unreliable.

As before, each sample will require many measurements to establish statistical confidence. For the accuracy tests with UWB, the number of measurements per sample will be large enough to provide a 95% confidence at the 1-centimeter level. For the reacquisition time tests with UWB, the number of measurements will be large enough to provide a 95% confidence at the 0. 5-second level. The time required for the UWB interference measurements will be receiver dependent and the bandwidth of the receiver under test will be used to determine the test time. Once again, code-carrier measurements will be used to minimize the time required for the accuracy tests.

4.5 Reporting

For each set of UWB signal parameters, we will report the following parameters of significance:

1) UWB power (N_{UWB}) portion of the total noise power (N_0+N_{UWB}) required to degrade the accuracy to $k15$ cm.
2) Accuracy as measured by code minus carrier when $N_0 + N_{UWB} = N^*_{ACC}$. In other words, record the accuracy when the noise power including UWB noise is equal to the previously determined threshold for broadband random noise only.

3) UWB portion (N_{UWB}) of the total power (N_0+N_{UWB}) required to degrade the reacquisition time to 1 second.
4) Reacquisition time when $N_0 + N_{UWB} = N^*_{ACC}$. In other words, record the reacquisition time when the signal to noise ratio including the UWB noise is equal to the previously determined threshold for reacquisition for broadband random noise only. The above listed parameters will be determined for both starting points N^* - 2dB and N^* - 4dB. We will provide timely inputs to the processes that are developing the operational scenarios.

5.0 Accuracy Test Procedure for Aviation Receivers

The accuracy test procedure is described in the following two subsections. This test procedure is adapted from Section 2.5.8 of RTCA DO-229B, the *Minimum Operational Performance Standard for Avionics Using the Wide Area Augmentation System (WAAS).* As described above, it includes the following steps: calibration, normalization with white noise only, UWB interference measurements, and reporting. The calibration is described in the Appendix. Sections 4.1 and 4.2 detail the broadband random noise normalization and the UWB interference measurements respectively.

5.1 Broadband Random Noise Normalization

1) Set up the test equipment as shown in Figure 9.
2) The GPS receiver is operated with the minimum rated received satellite signal level. Compensation is applied to adjust for room temperature, satellite simulator noise output, or the effects of a remote antenna preamplifier as needed. In other words, set the GPS power (C) to –134.5 dBm+G_{LNA} where G_{LNA} is the gain of any equipment that might nominally appear between the antenna and the receiver under test.
3) Broadband random noise is added to the simulated GPS satellite signal at the receiver input. Set the center frequency of the broadband noise to 1575.42 MHz. The starting value is the RTCA/DO-229B MOPS level for initial acquisition. Adjust the broadband noise power such that the noise power is –103.5 dBm+G_{LNA} as measured in the standard filter described earlier. The gain G_{LNA} accounts for the gain that appears between the antenna and the receiver under test. As a rough check on power levels, measure the carrier to noise density (C/N_0) as reported by the receiver. This (C/N_0) should be approximately 33 dB-Hz.
4) Let the GPS receiver track the satellite and reach steady state (for at least 10 seconds).
5) Measure the unsmoothed pseudorange and estimate the one-sigma pseudorange error by computing the standard deviation σ_r of the code-minus-carrier test statistic after removing a 2nd-order polynomial fit of the mean. Use the sample size required to achieve the confidence levels described above. Also recall that the unsmoothed pseudorange error is larger than the smoothed pseudorange error by a factor of *k*. This factor is the ratio of the noise bandwidth for the code loop to the noise bandwidth when 100 seconds of carrier smoothing is used.
6) Increase the broadband random noise power in 1 dB steps until the variance just exceeds the *k*15 cm accuracy limit. Record the noise power setting (N^*_{ACC}). Record also the C/N indicator from the GPS receiver.

5.2 Procedure for Testing Potential UWB Impact on GPS Accuracy

1) Setup the test equipment as shown in Figure 12 without the pseudolite.
2) Set the noise attenuator to 2 dB below the value obtained in Section 4.1, Step 6 (N^*_{ACC}).
3) Select one set of UWB signal parameters from the test matrix described earlier and set the UWB noise power (N_{UWB}) 10 dB below the broadband random noise power (N_0).
4) Let the GPS receiver track the satellite and reach steady state (for at least 10 seconds).

5) Measure the unsmoothed pseudorange and estimate the one-sigma pseudorange error by computing the standard deviation σ_r of the code-minus-carrier test statistic after removing a 2nd-order polynomial fit of the mean. Use the sample size required to achieve the confidence levels described above and recall that the unsmoothed pseudorange error is larger than the smoothed pseudorange error by a factor of k.

6) Increase the UWB power until the k15 cm pseudorange variance is just exceeded. Record that power setting. Record also the C/N indicator from the GPS receiver. Also find and record the accuracy when the total power (UWB plus broadband) equals the threshold power for broadband noise alone.

7) Change the UWB signal parameters to the next values in the test matrix and repeat steps 3) through 6) until all n combinations of UWB signal parameters are exhausted. For this initial test phase, $n=81$.

8) Set the noise attenuator to 4 dB below the value obtained in Section 4.1, Step 6 (N^*_{ACC}) and repeat steps 3) through 6) to obtain a second set of data points for the n cases.

6.0 Reacquisition Time Test Procedure for Land Receivers

The reacquisition time test procedure is described in the following two subsections. This test procedure is adapted from Section 2.5.6 of RTCA DO-229B, the *Minimum Operational Performance Standard (MOPS) for Avionics Using the Wide Area Augmentation System (WAAS).* These tests assume that only one satellite is lost and needs to be reacquired. As such, the receiver is assumed to have a good estimate of its time offset relative to GPS time and the expected Doppler offset of the lost satellite. However, the receiver must search over all possible values of code phase.

Similar to the accuracy test, the reacquisition time test includes the following steps: calibration, normalization with broadband random noise only, UWB interference measurements, and reporting. The calibration is described in the Appendix. Sections 5.1 and 5.2 detail the broadband random noise normalization and the UWB interference measurements.

6.1 Broadband Random Noise Normalization

1) Set up the test equipment as shown in Figure 9. Connect the simulator clock to the receiver clock. This connection provides the time information to the receiver that is assumed in the reacquisition time tests described in Section 2.5.6 of the MOPS.
2) The GPS receiver is operated with the minimum rated received satellite signal level. Compensation is applied to adjust for room temperature, satellite simulator noise output, or the effects of a remote antenna preamplifier as needed. In other words, set the GPS power (C) to –134.5 dBm+G_{LNA} where G_{LNA} is the aggregate gain of any equipment that might nominally appear between the antenna and the receiver under test.
3) Add broadband random noise to the simulated GPS satellite signal at the receiver input. Set the center frequency of the broadband noise to 1575.42 MHz. The starting value is the RTCA/DO-229B MOPS level for initial acquisition. Adjust the broadband random noise power such that the noise power is –103.5 dBm+G_{LNA} as measured in the standard filter described earlier. The gain G_{LNA} accounts for the gain that nominally appears between the antenna and the receiver under test. As a rough check on power levels, measure the carrier to noise *density* (C/N_0) as reported by the receiver. This (C/N_0) should be approximately 33 dB-Hz.
4) Let the GPS receiver track the satellite and reach steady state (for at least 10 seconds).
5) Attenuate the GPS signal so that the receiver loses lock.
6) Introduce a 50 meter step in simulated pseudorange over 10 seconds while the signal is not being tracked by the receiver under test.
7) Remove the attenuation of the GPS signal and measure the time until the receiver reports code phase lock continuously for 10 seconds.
8) Repeat steps 4) through 7) until the sample size provides the confidence levels described above.
9) Increase the broadband random noise power by 1 dB and repeat steps 4) through 9) until the noise power (N_0) is slightly greater than the threshold power σ_{REACQ} for the reacquisition time specification of 1 second.

6.2 Reacquisition Time Test with UWB Noise

1) Setup the test equipment as shown in Figure 12 without the pseudolite.
2) Set the noise power to 2 dB less than the threshold noise power (N^*_{REACQ}) determined in the broadband random noise tests described in Section 5.1.
3) Select one set of UWB signal parameters from the test matrix described earlier and set the UWB noise power (N_{UWB}) 10 dB below the broadband random noise power (N_0).
4) Let the GPS receiver track the satellite and reach steady state (for at least 10 seconds).
5) Attenuate the GPS signal so that the receiver loses lock.
6) Introduce a 50 meter step in simulated pseudorange over 10 seconds while the signal is not being tracked by the receiver under test.
7) Remove the attenuation of the GPS signal and measure the time until the receiver reports code phase lock continuously for 10 seconds.
8) Repeat steps 4) through 7) until the sample size provides the confidence levels described earlier for reacquisition time.
9) Increase the UWB noise power by 1 dB and repeat steps 4) through 9) until the total noise power (N_0+N_{UWB}) is slightly greater than the power required to obtain a 1 second reacquisition time. Record the UWB power (N_{UWB}). Also find and record the reqcauisition time when the total power (UWB plus broadband) equals the threshold power for broadband noise alone.
10) Change the UWB signal parameters to the next values in the test matrix and repeat steps 4) through 9) until all UWB signal parameters are exhausted.
11) Set the broadband random noise power to N^*_{REACQ} - 4 dB and repeat steps 4) through 10) to obtain a second set of *n* values of UWB power settings.

Appendix A: Figures

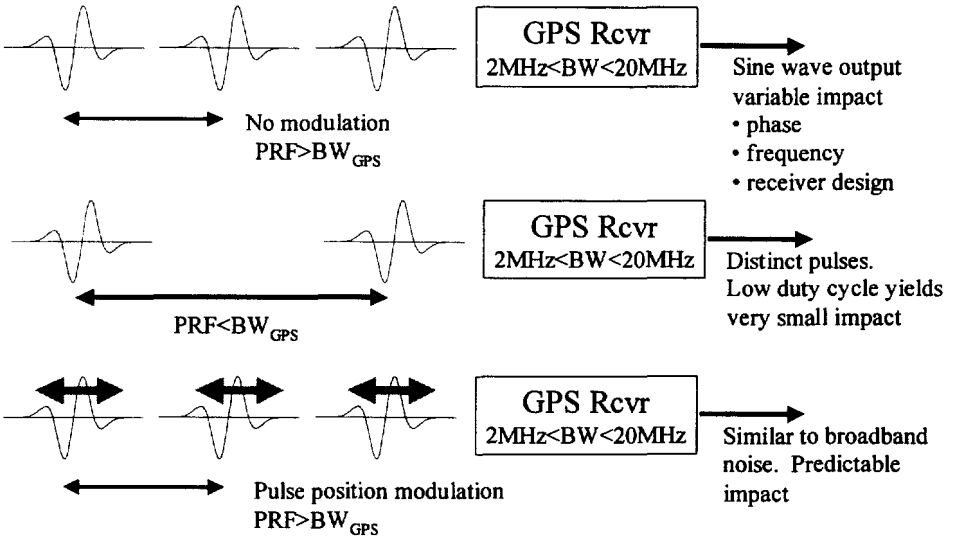

Figure 1: UWB Signaling

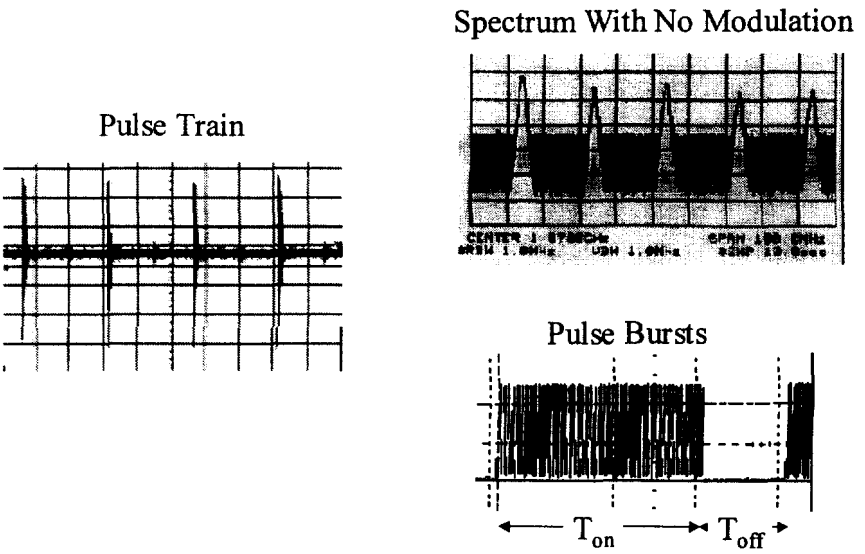

Figure 2: Different UWB Signals

No Modulation

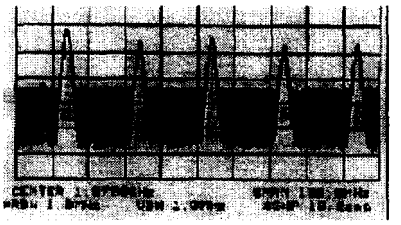

Spectrum With Dithering

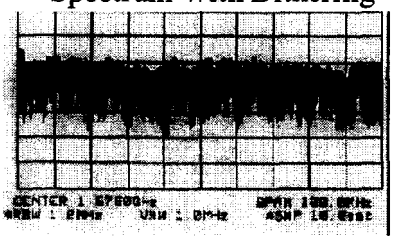

Spectrum of Random OOK

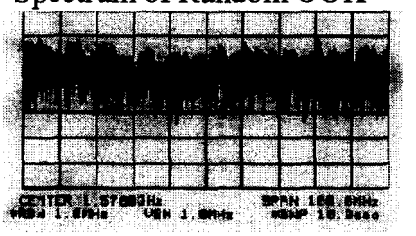

Figure 3: UWB Amplitude Spectrum

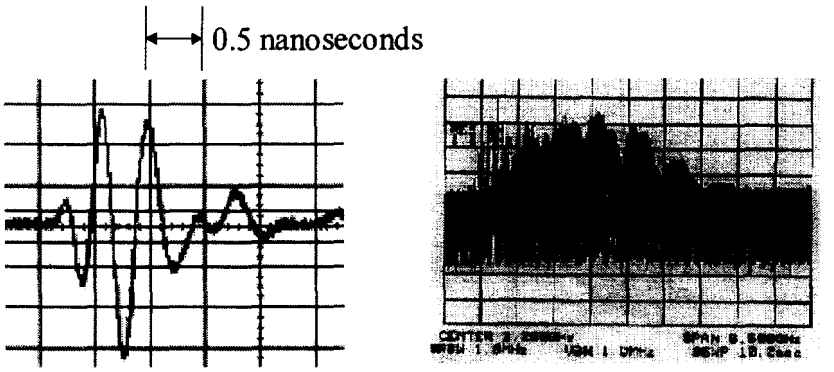

Single UWB Pulse

Frequency Spectrum

Figure 4: A UWB Signal

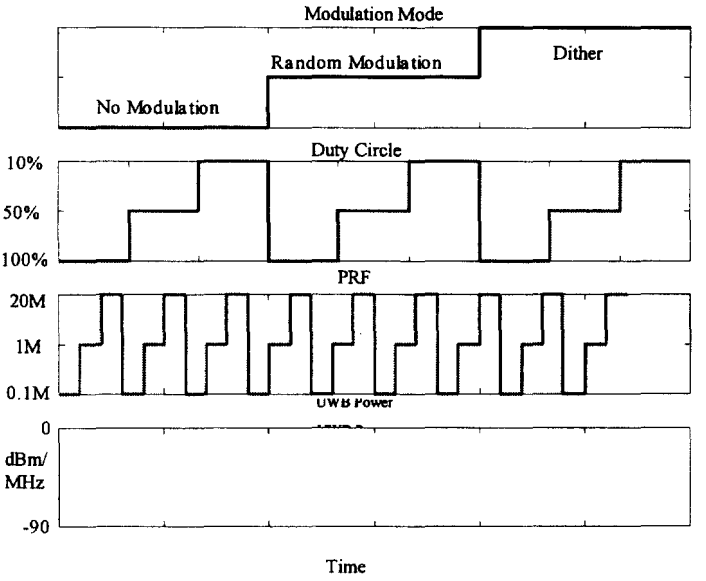

Figure 5: Loops for UWB Signal Parameters

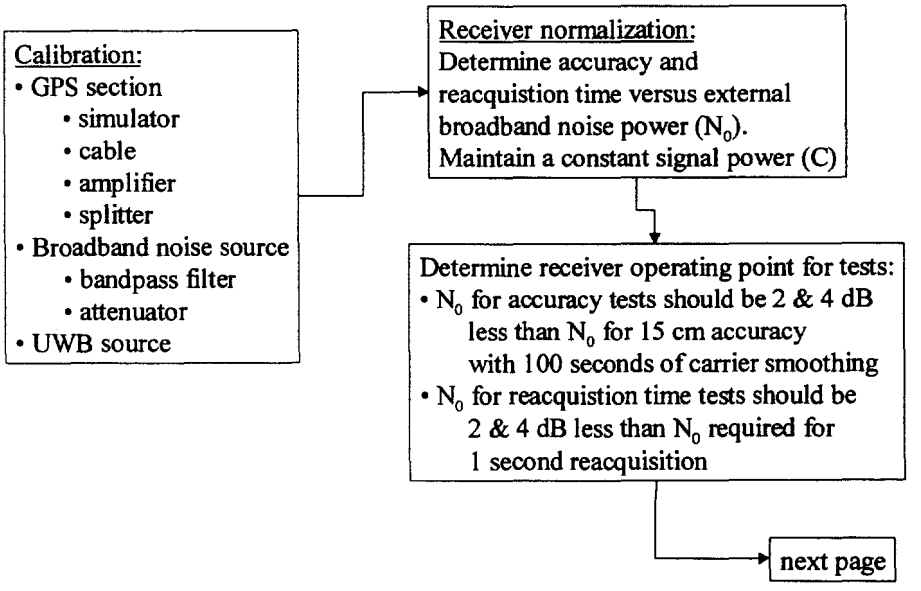

Figure 6: Overall Test Flow (1 of 3)

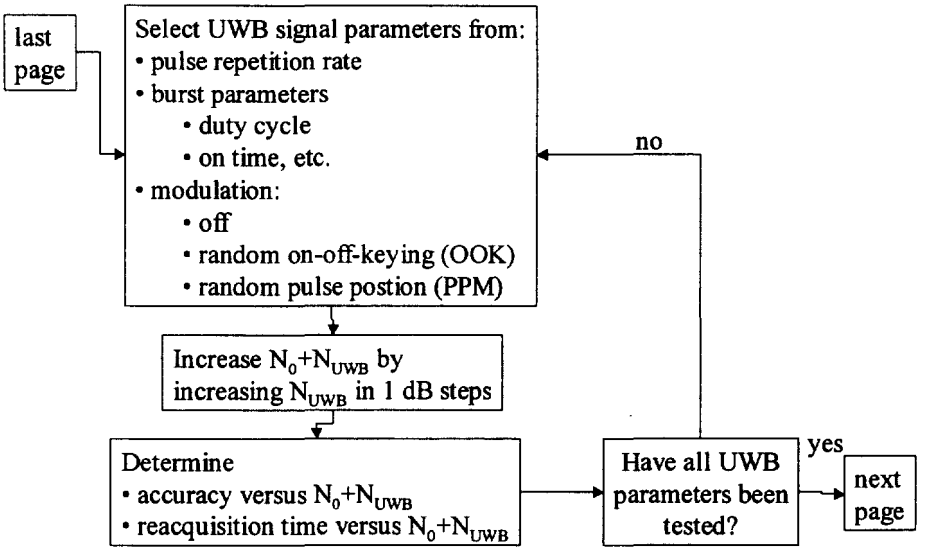

Figure 7: Overall Test Flow (2 of 3)

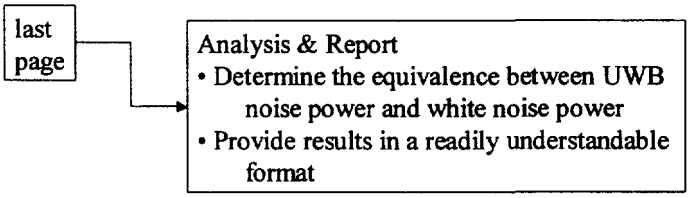

Figure 8: Overall Test Flow (3 of 3)

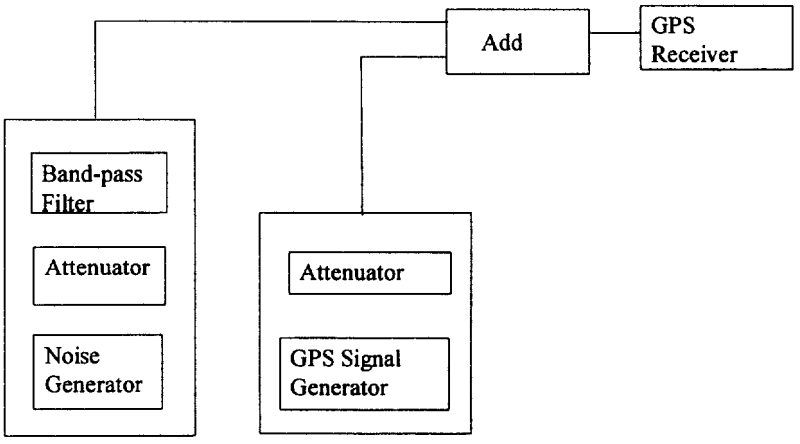

Figure 9: Test Setup for Receiver Normalization

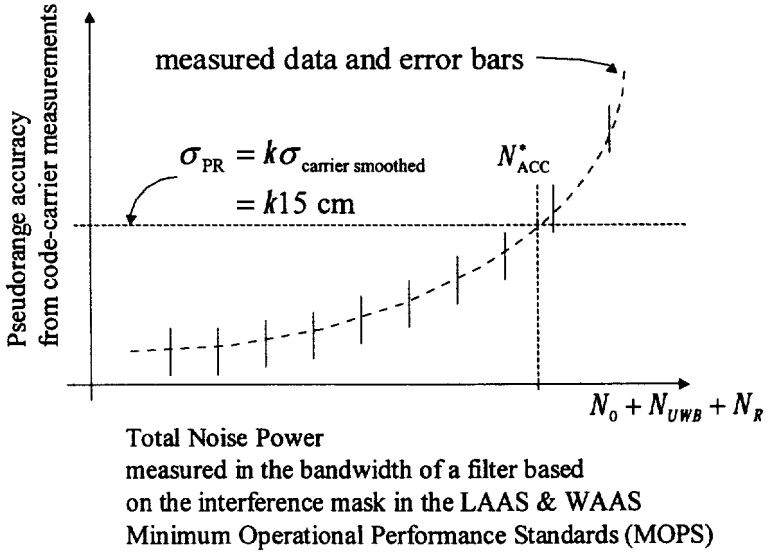

Figure 10: Receiver Normalization for Pseudorange Accuracy Test

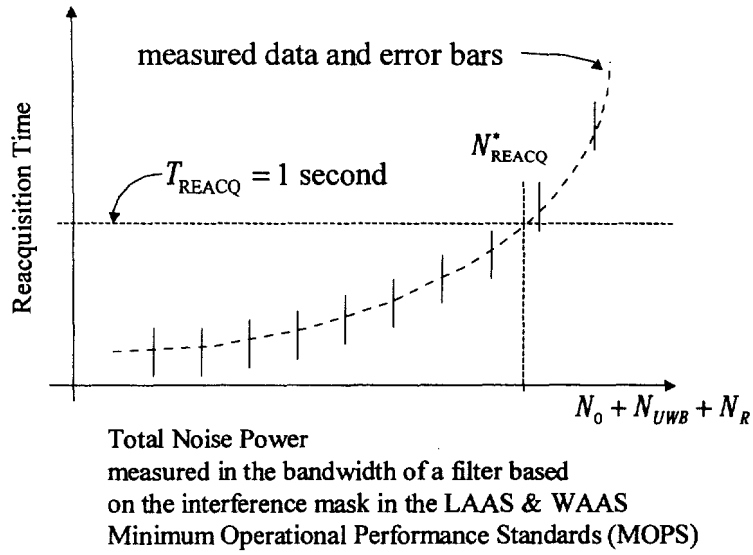

Figure 11: Receiver Normalization for Reacquisition Time

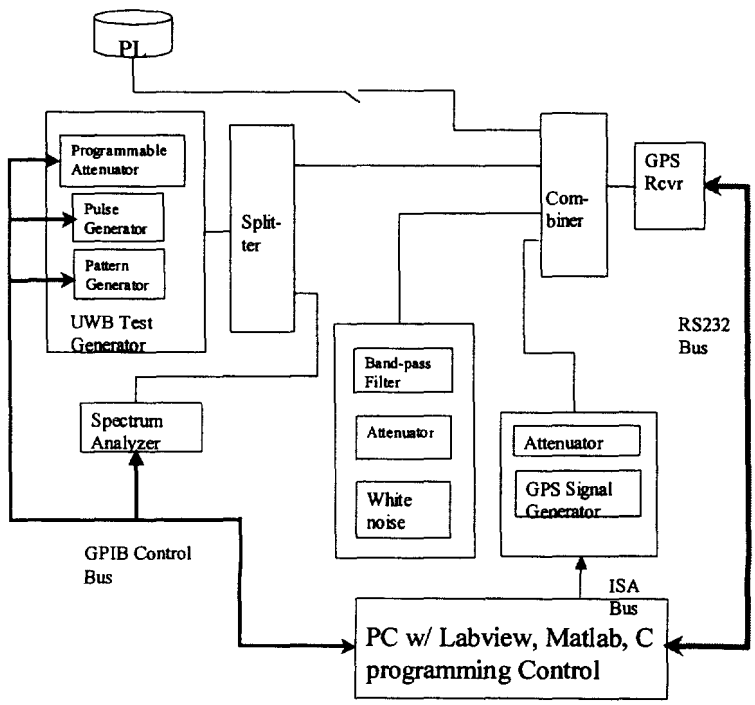

Figure 12: Full Test Setup

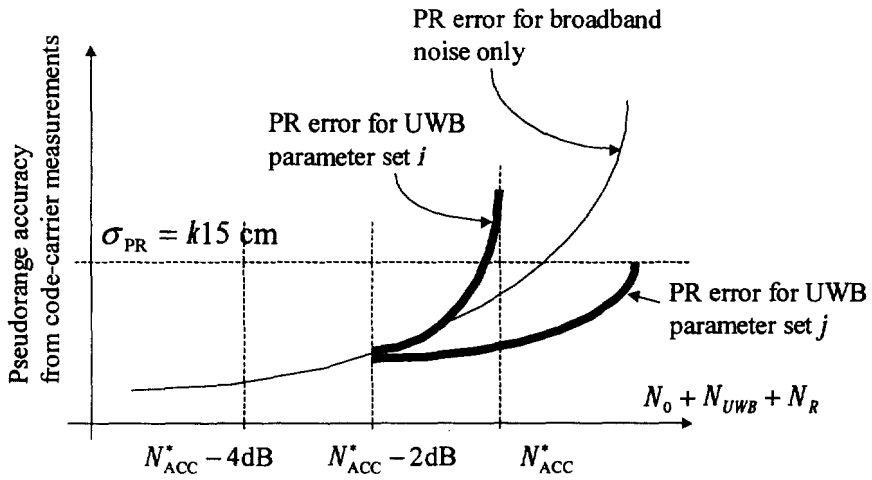

Note: error bars have been suppressed in this figure.

Figure 13: Pseudorange Accuracy as UWB Power is Added to Increase the Total Noise

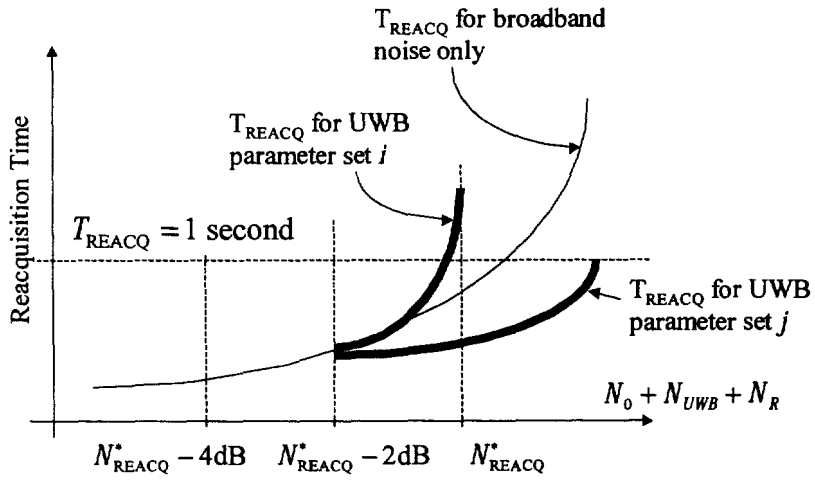

Note: error bars have been suppressed in this figure.

Figure 14: Reacquisition Time Increase as UWB Power is Added to Increase the Total Noise Power

Appendix B: Calibration

B.1 GPS signal calibration

B.1.1 Measure signal power at the output of the GPS simulator

This step calibrates the GPS simulator and the cable. It provides the relationship between the simulator's specified power lever and the readings at the power meter or spectrum analyzer. If a spectrum analyzer is used, calibrate the spectrum analyzer with a power meter as necessary.

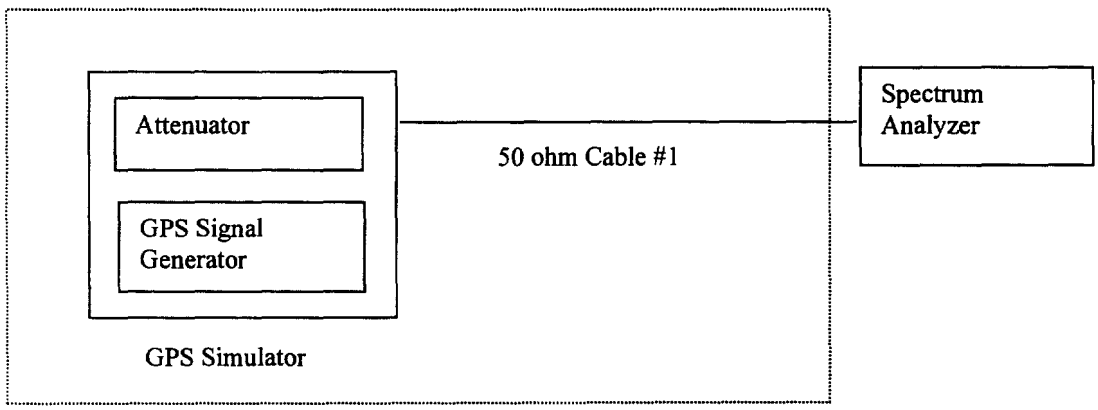

Figure B1: Measured Signal Power Generated by GPS Simulator

Procedure:

- Turn off the PRN code of the GPS simulator.
- Sweep the power level setup of the GPS simulator.
- Measure the signal strength at the spectrum analyzer.
- Plot the calibration chart (see Figure B2 for an example).

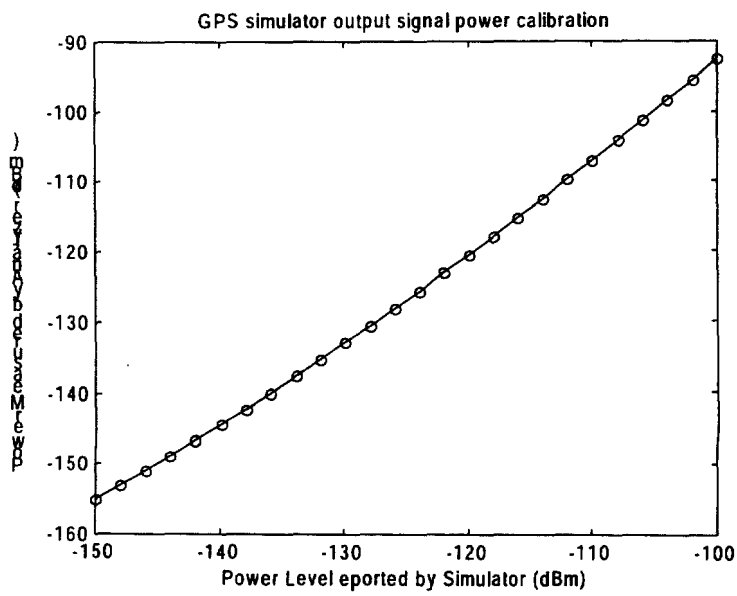

Figure B2: GPS Simulator Power Level Calibration Plot

B.1.2 Calibrate GPS Power with splitters and combiners

As shown in Figure B3, the test setup will use splitters and combiners. Hence, we need to calibrate their effects. It is assumed that the impedance of a GPS receiver is 50 Ω; thus there is no power reflection.

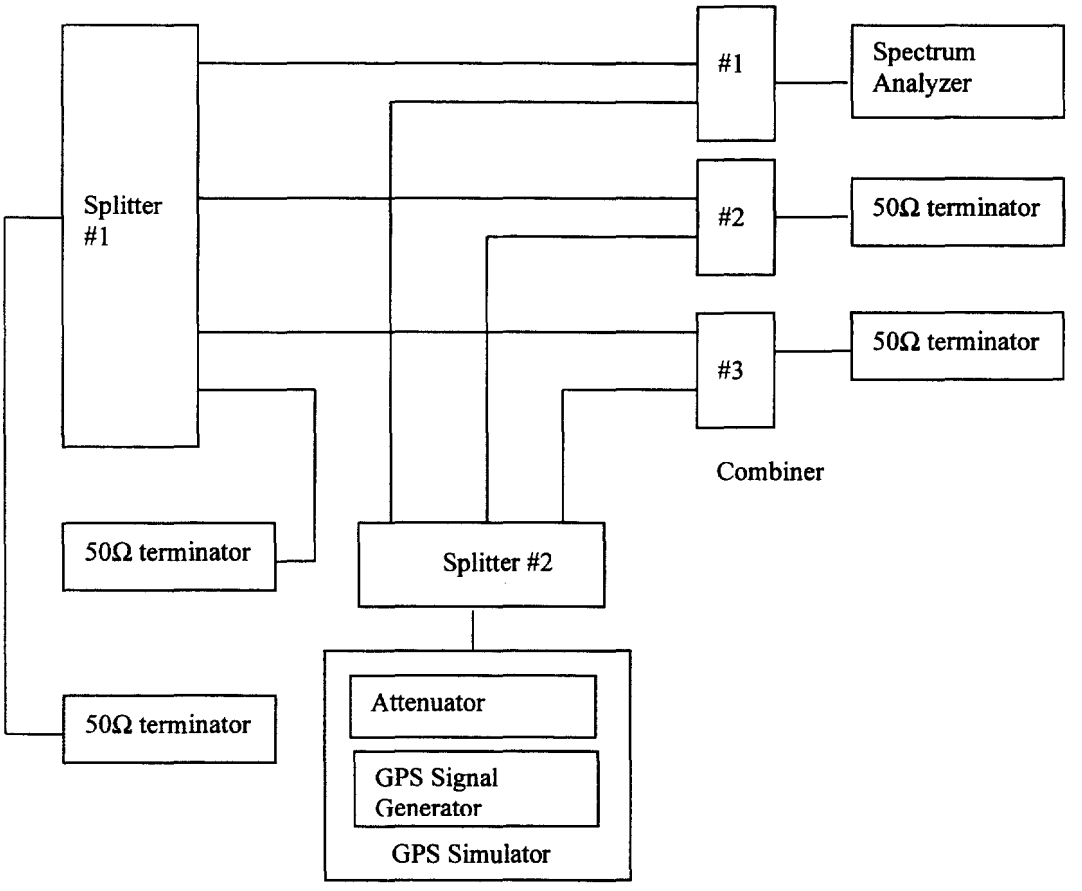

Fig. B3: Calibration with Splitter and Combiner

Procedure:

- Select PRN code at the GPS simulator.
- Sweep the power level of the simulator.
- Plot received power vs. simulator setup power (to generate a plot like Figure B2).
- Rotate the location of the spectrum analyzer to calibrate each port (for each receiver).
- It may be preferable to just check a few points instead of sweeping the entire power range.

Notes:

1) We can also calibrate the setup as an equivalent 6-port net using the network analyzer.
2) To maintain the characteristics of the net close to their calibrated status, we plan to build an enclosure to keep the above components and their connections fixed.
3) The circuit can be balanced by adding calibrated pads.

B.2 UWB calibration

B.2.1 Snapshots of UWB transmitted signal

Record pulse shape in the time domain and spectrum in the frequency domain for each transmitter (for the selected parameters only).

B.2.2 UWB transmitted power vs. setup power

This procedure calibrates the measured UWB output power vs. the transmitter setup power.

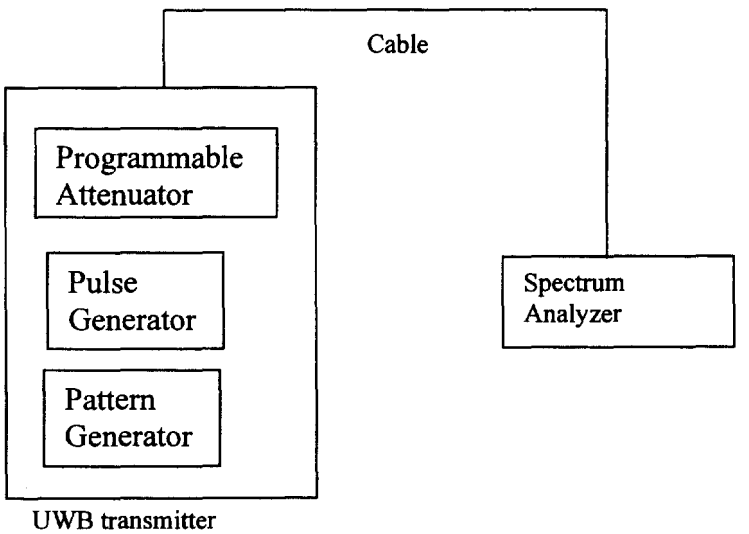

Figure B4: UWB Transmit Power vs. Setup

Procedure:

- Set the UWB to the no-modulation mode and PRF = 20MHz (TBC).
- Sweep the UWB power level by adjusting the attenuator.
- Measure the signal strength at the spectrum analyzer.
- Plot the calibration chart (for an example, see Figure B5).

B.2.3 UWB transmitted power through splitter and combiner

This setup takes into account component losses (and other effects) in the automatic measurement setup (see Figure 12). This step is similar to Figure B3. As noted before, calibration using the network analyzer may be equivalent.

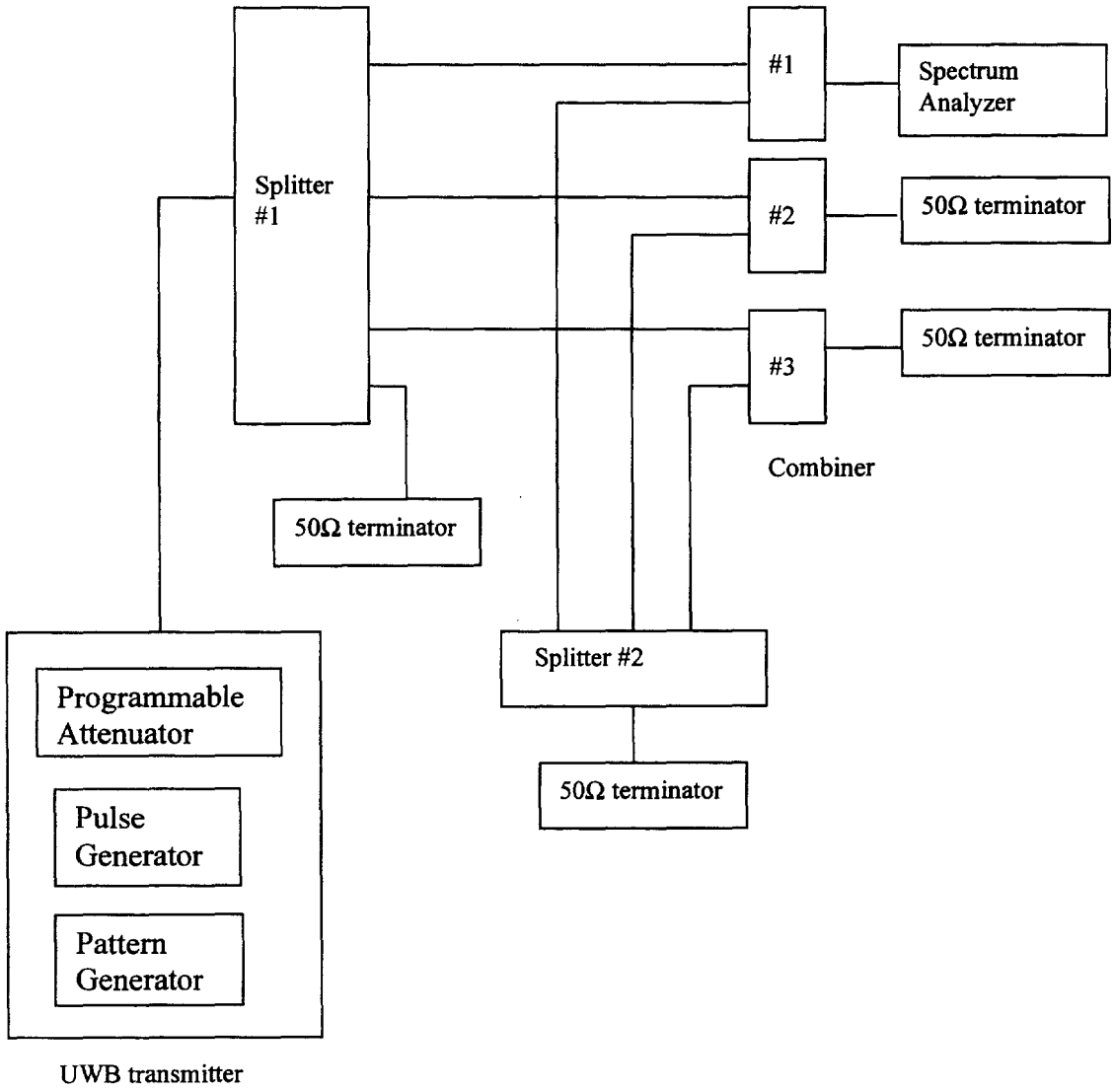

Figure B6: UWB Power through Splitter and Combiner

Procedure:

- Sweep the power level of the UWB transmitter.
- Plot received power vs. simulator setup power (to generate a plot similar to Figure B5).
- Rotate the location of the spectrum analyzer to calibrate each port (for each receiver)
- We may be able to just check a few points instead of sweeping the entire power range.