QWEST Communications International Inc. Technical Publication

Interconnection – Shared Loop

Copyright 2000©
QWEST Communications International Inc.
All Rights Reserved

77406
Issue A
October 2000

CONTENTS

Chapter and Section **Page**

1. Introduction 1-1
   - 1.1 General 1-1
   - 1.2 Reason For Reissue 1-1
   - 1.3 Section Title 1-1
     - 1.3.1 Subsection Title 1-1
     - 1.3.2 Another Subsection Title 1-3

2. Service Description 2-1
   - 2.1 Shared Loop Service Overview 2-1
   - 2.2 Qualified Shared Loop 2-1
   - 2.3 Common Area Splitter Collocation 2-2
   - 2.4 Splitter in CLEC Collocation Area 2-3
   - 2.5 Conditioning of Shared Loops 2-3
   - 2.6 Applied Power Level 2-3

3. Channel and Interface Specifications 3-1
   - 3.1 General 3-1
   - 3.2 Network Channel (NC) Code Function 3-1
   - 3.3 NC Code Components and Format 3-1
   - 3.4 Shared Loop NC Codes 3-2
   - 3.5 NCI Code Function 3-2
   - 3.6 NCI Code Components 3-2
   - 3.8 Shared Loop NCI Codes 3-4

4. Technical Specifications 4-1
   - 4.1 General 4-1
   - 4.2 ADSL Qualified Shared Loop 4-1

5. Definitions 5-1
   - 5.1 Acronyms 5-1
   - 5.2 Glossary 5-1

COMMENTS on PUB 77406

PLEASE TEAR OUT AND SEND YOUR COMMENTS/SUGGESTIONS TO:

QWEST Corporation
Manager - Writing Services
700 W Mineral Ave., Room IA-B13.34
Littleton, CO 80120
(303) 707-7454
Fax: (303) 707-9414
E-Mail: soverma@uswest.com

Information from you helps us to improve our Publications. Please take a few moments to answer the following questions and return to the above address.

Was this Publication valuable to you in understanding the technical parameters of our service?	YES _____	NO _____
Was the information accurate and up-to-date?	YES _____	NO _____
Was the information easily understood?	YES _____	NO _____
Were the contents logically sequenced?	YES _____	NO _____
Were the tables and figures understandable and helpful	YES _____	NO _____
Were the pages legible?	YES _____	NO _____

If you answered NO to any of the questions and/or if you have any other comments or suggestions, please explain:

_____

_____

_____

(Attach additional sheet, if necessary)

Name _____ Date _____

Company

_____

Address _____

Telephone Number

_____

E-Mail _____

CONTENTS (Continued)

Chapter and Section **Page**

6. References....6-1
- 6.1 American National Standards Institute Documents....6-1
- 6.2 Institute of Electrical and Electronics Engineers Publications....6-1
- 6.3 International Telecommunication Union Recommendations....6-1
- 6.4 QWEST Publications....6-1
- 6.5 Federal Communications Commission Documents....6-1
- 6.6 Telcordia Documents....6-2
- 6.7 Ordering Information....6-2
- 6.8 Trademarks....6-3

Tables

3-1 Available Shared Loop Network Channel Codes....3-1

3-2 Available Shared Loop Network Channel Interface Codes....3-1

3-3 Available Shared Loop NC/NCI Code Combinations....3-1

3-4: Valid Shared Loop NC/NCI Code Combinations....3-1

Figures

1-1 Shared Loop Concept Diagram....1-2

3-1 Format Structure for NC Codes....3-1

3-2 NCI Code Components....3-1

4-1 Typical ADSL Qualified Shared Loop....4-1

NOTICE

This document describes Interconnection - Shared Loop service from Qwest Corporation, hereinafter referred to as Qwest. Qwest's Interconnection – Shared Loop provides a Competitive Local Exchange Carrier (CLEC) with the opportunity to offer advanced data services simultaneously with an existing end user's Qwest-provided analog, voice-grade service (POTS (Plain Old Telephone Service)) on a single metallic loop by using the frequency range above the voice band. A POTS splitter separates the voice and data traffic and allows the loop to be used for simultaneous data transmission and POTS service. Interconnection --Shared Loop from Qwest requires that the POTS service be provided to the end user by Qwest. Interconnection – Shared Loop may also be referred to as "Line Sharing" or the "High Frequency Spectrum Network Element" (HUNE).

Qwest reserves the right to revise this document for any reason, including but not limited to, conformity with standards promulgated by various governmental or regulatory agencies; utilization of advances in the state of the technical arts; or to reflect changes in the design of equipment, techniques, or procedures described or referred to herein.

Liability to anyone arising out of use or reliance upon any information set forth herein is expressly disclaimed, and no representation or warranties, expressed or implied, are made with respect to the accuracy or utility of any information set forth herein.

This document is not to be construed as a suggestion to any manufacturer to modify or change any of its products, nor does this publication represent any commitment by Qwest to purchase any specific products. Further, conformance to this publication does not constitute a guarantee of a given supplier's equipment and/or it's associated documentation.

Ordering information for Qwest technical publications can be obtained from the Reference Section of this document.

If further information is required, please contact:

Qwest Corporation
Manager - Writing Services
700 W. Mineral Avenue
Littleton, CO 80120
(303) 707-7454
E-mail: soverma@uswest.com

Throughout this publication, the term Qwest signifies Qwest Communications International Inc.

1. Introduction

1.1 General

Technical Publication 77406 provides technical information for Interconnection - Shared Loop service from U S WEST. Interconnection - Shared Loop provides a Competitive Local Exchange Carrier (CLEC) with the opportunity to offer advanced data services simultaneously with an existing end user's analog, voice-grade service (POTS (Plain Old Telephone Service)) on a single metallic loop by using the frequency range above the voice band. A POTS splitter separates the voice and data traffic and allows the loop to be used for simultaneous data transmission and POTS service. Interconnection - -Shared Loop from QWEST requires that the POTS service be provided to the end user by U S WEST. Interconnection - Shared Loop may also be referred to as "Line Sharing" or the "High Frequency Spectrum Network Element" (HUNE).

1.2 Reason for Reissue

This is a new publication. If it is reissued, the reason will be noted in this paragraph.

1.3 Scope

The intent of this document is to provide CLECs with a description of U S WEST's Shared Loop, its operational characteristics and interfaces. QWEST has the responsibility for providing a shared loop as described in this and other referenced publications. CLECs have the responsibility to provide any xDSL services that are compatible with U S WEST's POTS service. Such services are limited to ADSL, RADSL, and G.lite. In the future, additional services may be used by the CLEC to the extent those services are deemed acceptable for Line Sharing deployment under applicable FCC rules.

1.4 Qualified Shared Loops

A Qualified Shared Loop is a transmission path between a Central Office Network Interface (CO-NI), typically the MDF, in a QWEST serving Central Office and the Network Interface at the End User location that meets requirements specified below. The End User Network Interface (EU-NI) is typically a Network Interface Device, or NID. The NID divides the QWEST facility from the EU's customer installation, i.e., inside wiring and customer premises equipment.

The requirements for qualifying a loop for sharing are:

- Qualified for ADSL capabilities by a transmission modeling tool that calculates a specific high frequency loss based on facility records.
- A metallic loop typically no longer than 15,000 feet of 26-gauge copper or 18,000 feet of 24-gauge copper. There is a possibility of mixed gauges.
- The EU customer must be fed by a metallic loop directly from the QWEST Central Office.
- The loop must not have any load coils on it.
- All bridge taps must be included in the total loop length.

- The sum of all bridged taps must not exceed 6,000 feet, with no individual bridged tap longer than 2,500 feet.
- Analog voice service (POTS) must be provided by U S WEST.
- The loop must have a calculated insertion loss at 196 kHz with 135-Ohm termination, based on the design on record, equal to or less than 49 dB to qualify for line sharing.

1.5 Concept Diagram of a Shared Loop

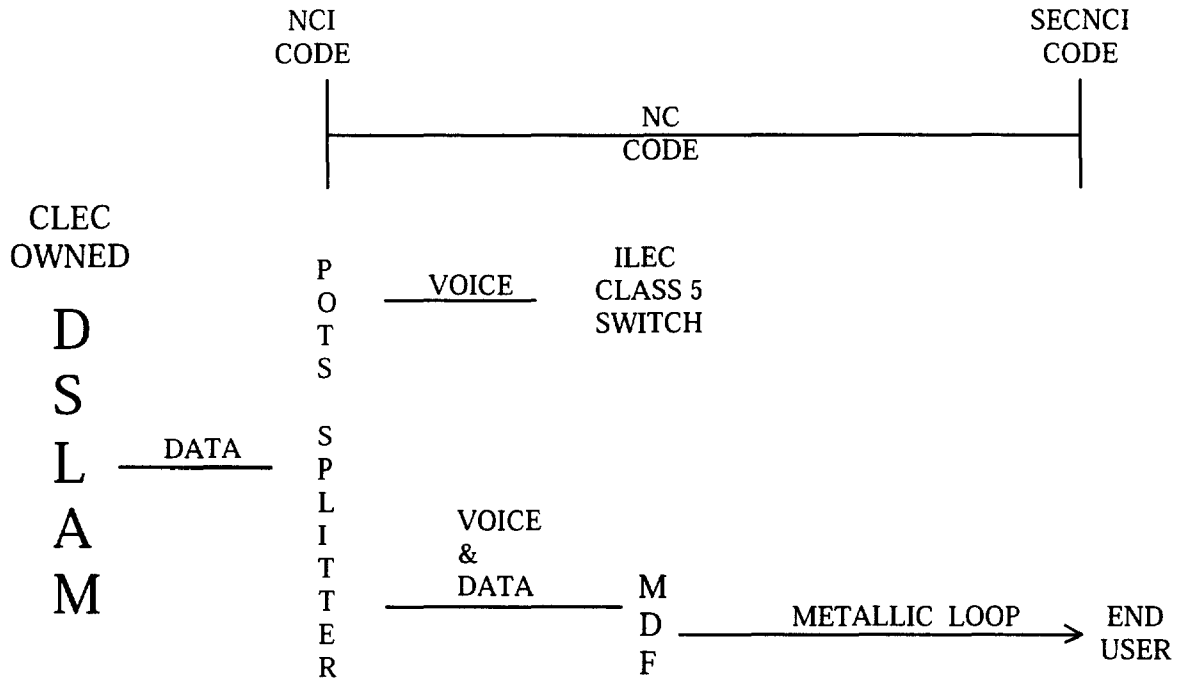

NC - Network Channel Code
NCI - Network Channel Interface Code
SECNCI - Secondary NCI Code

Figure 1-1 shows a diagram of the connections for a Shared Loop.

Figure 1-1 Shared Loop Concept Diagram

In Figure 1-1, the ILEC is U S WEST. All origination equipment is located in the QWEST Central Office. The DSLAM (Digital Subscriber Line Access Multiplexer) is owned by the CLEC (Competitive Local Exchange Carrier). The POTS splitter can be located either in the CLEC collocation area or in QWEST common area, depending on agreements between QWEST and the CLEC. Voice service originates in the QWEST Class 5 switch and terminates on the POTS splitter. DSL service originates in the CLEC DSLAM and terminates on the POTS splitter. The combined voice and DSL originates at the output of the POTS splitter and terminates on the MDF (Main Distributing Frame) for cross-connection to the local loop serving the end user customer.

CONTENTS

Chapter and Section **Page**

2. Service Description 2-1
- 2.1 Shared Loop Service Overview 2-1
- 2.2 Qualified Shared Loop 2-1
- 2.3 Common Area Splitter Collocation 2-2
- 2.4 Splitter in CLEC Collocation Area 2-3
- 2.5 Conditioning of Shared Loops 2-3
- 2.6 Applied Power Level 2-3

2. Service Description

2.1 Shared Loop Service Overview

Interconnection - Shared Loop provides a Competitive Local Exchange Carrier (CLEC) with the opportunity to offer advanced data services simultaneously with an existing end user's analog voice-grade service (POTS (Plain Old Telephone Service)) on a single metallic loop by using the frequency range above the voice band on the copper loop. A POTS splitter separates the voice and data traffic, allowing the loop to be used for simultaneous data transmission and POTS service. Interconnection --Shared Loop from QWEST requires that the POTS service must be provided to the end user by QWEST. Interconnection - Shared Loop may also be referred to as "Line Sharing" or the "High Frequency Spectrum Network Element" (HUNE).

QWEST will provide the CLEC with access to the frequency range above the voiceband on a metallic loop facility used to carry analog circuit-switched voiceband transmissions. CLEC may use this access to provision any voice compatible xDSL technologies. Specifically permissible are ADSL, RADSL, G.lite and any other xDSL technology that is presumed to be acceptable for shared line deployment in accordance with FCC rules. "Line sharing" is defined as the situation that exists when the CLEC has access to the HUNE and provides xDSL services on a loop that also carries QWEST POTS.

A CLEC must have a POTS splitter installed in the central office that serves the end-user of the loop. The POTS splitter can exist in the QWEST CO in either a Common Area Splitter Collocation area or in the CLEC's own collocation area. The POTS splitter must meet the requirements for central office equipment collocation set by the FCC in its March 31, 1999 order in CC Docket No. 98-147. In addition, the CLEC must provide the end-user with, and is responsible for the installation of, a splitter, filter(s) and/or other equipment necessary for the end-user to receive separate voice and data services across the loop. The POTS splitter will be appropriately hard wired or pre-wired so that QWEST is required to inventory no more than two points of termination.

2.2 Qualified Shared Loop

The CLEC initially will use QWEST's existing pre-qualification functionality and order processes to pre-qualify lines and order the HUNE. The CLEC will determine, in its sole discretion and at its risk, whether to order the HUNE across any specific loop.

A Qualified Shared Loop is a metallic transmission path between a Central Office Network Interface (CO-NI), typically the MDF, in a QWEST serving Central Office and the Network Interface at the End User location that meets requirements specified below. The End User Network Interface (EU-NI) is typically a Network Interface Device, or NID. The NID divides the QWEST facility from the EU's customer installation, i.e., inside wiring and customer premises equipment. This metallic path meets qualification parameters as calculated from the loop design on record. A CLEC gains access to these unbundled services at the QWEST CO through established Physical or Virtual Collocation arrangements.

QWEST cannot ensure that typical xDSL interfering signals, e.g., T1-repeatered lines or BRI ISDN lines, are not or will not be in the same or adjacent cable binder groups as a Qualified Shared Loop. End user locations served by loop facilities that are not able to be qualified for xDSL (i.e., Digital Loop Carrier loops) will not be a candidate for a Shared Loop.

The requirements for qualifying a loop for line sharing are:

The requirements for qualifying a loop for sharing are:

- A metallic loop typically no longer than 15,000 feet of 26-gauge copper or 18,000 feet of 24-gauge copper. There is a possibility of mixed gauges.
- The EU customer must be fed by a metallic loop directly from the QWEST Central Office.
- The loop must not have any load coils on it.
- All bridge taps must be included in the total loop length.
- The sum of all bridged taps must not exceed 6,000 feet, with no individual bridged tap longer than 2,500 feet.
- Analog voice service (POTS) must be provided by QWEST.
- The loop must have a calculated insertion loss at 196 kHz with 135-Ohm termination, based on the design on record, equal to or less than 49 dB to qualify for line sharing.

2.3 Common Area Splitter Collocation

A CLEC may place POTS splitters in QWEST central offices via Common Area Splitter Collocation. In this scenario, a CLEC will have the option to either purchase the POTS splitter of its choosing or to have QWEST purchase the POTS splitter on the CLEC's behalf subject to full reimbursement. The CLEC will lease the POTS splitter to QWEST at no cost. Subject to agreed to or ordered pricing, QWEST will install and maintain the POTS splitter in the central office. QWEST will install the POTS splitter in one of three locations in the central office:

1. In a relay rack as close to the CLEC DS0 termination points as possible;
2. Where an intermediate frame is used, on that frame; or
3. Where options 1 or 2 are not available, or in central offices with network access line counts of less than 10,000, on the main distribution frame or in some other appropriate location, which may include an existing QWEST relay rack or bay.

2.4 Splitter in CLEC Collocation Area

A CLEC may, at its option, place the POTS splitters in its own collocation area. QWEST will reclassify TIE cables, re-stencil framing, and perform any related work required to provision line sharing.

2.5 Conditioning of Shared Loops

Prior to July 31, 2000, the CLEC cannot request conditioning for Shared Loops to remove load coils, bridged taps, or electronics. If QWEST begins to condition lines for its xDSL services, the CLEC will have the same option. By July 31, 2000, unless another date is agreed to by QWEST and the CLEC in writing, the CLEC will be able to request conditioning of Shared Loops. QWEST will perform requested conditioning, including de-loading and removal of bridged taps, unless QWEST demonstrates in advance that conditioning the Shared Loop will significantly degrade the end user's analog voice service.

2.6 Applied Power Level

The applied power level of any transmitted signal must comply with American National Standards Institute (ANSI) specifications T1.401-1993 and Bellcore's Generic Requirements 1089-CORE, *Electromagnetic compatibility and Electrical Safety Generic Criteria for Network Telecommunications Equipment*. Continuous idle-state voltages applied to the CO-NI and EU-NI must fall within the range of 0 to 105 volts DC with respect to ground potential.

The transmitted signal must be one that complies with the Spectral Compatibility Standard under development by the Accredited Standards Committee on Telecommunications, T1, Working Group T1E1.4. While this document is in its final stages of development, the power spectrum template is readily available and well known by manufacturers in the industry.

CONTENTS

Chapter and Section **Page**

3. Channel and Interface Specifications 3-1
- 3.1 General 3-1
- 3.2 Network Channel (NC) Code Function 3-1
- 3.3 NC Code Components and Format 3-1
- 3.4 Shared Loop NC Codes 3-2
- 3.5 NCI Code Function 3-2
- 3.6 NCI Code Components 3-2
- 3.8 Shared Loop NCI Codes 3-4

Figures

3-1 Format Structure for NC Codes 3-1

3-2 NCI Code Components 3-1

Tables

3-1 Available Shared Loop Network Channel Codes 3-1

3-2 Available Shared Loop Network Channel Interface Codes 3-1

3-3 Available Shared Loop NC/NCI Code Combinations 3-1

3-4: Valid Shared Loop NC/NCI Code Combinations 3-1

3. Channel and Interface Specifications

3.1 General

Network Channel (NC) codes describe, in standard format, the characteristics of the service channel. Network Channel Interface (NCI) codes describe the physical and electrical characteristics of the Network Interface (NI). *Industry Support Interface (ISI): NC/NCI Code Dictionary*, Bellcore Special Report SR-STS-000307 fully describes these coding schemes.

3.2 Network Channel (NC) Code Function

Service considerations are encoded into NC codes. The Carrier or End-User specifies the NC Code to advise QWEST of the required service connection of the channel and of any applicable Central Office (CO) functions.

3.3 NC Code Components and Format

An NC code is a four-character code with two data elements:

- Channel Code
- Optional Feature Code

Figure 3-1 illustrates NC code format.

Network Channel Code

Data Element	Channel Code		Optional Feature Code	
Character Position	1	2	3	4
Character Key	X	X	X or -	X or -

X = Alphanumeric
\- = Hyphen

Figure 3-1 Format Structure for NC Codes

The **Channel Code** (character positions 1 and 2) is a two character alpha or alphanumeric code that describes the channel service in an abbreviated form. The channel code will frequently, but not always, be the service code of special service circuits or the transmission grade of message trunk circuits. The NC channel code field is always filled.

The **Optional Feature Code** (character positions 3 and 4) is a two character alpha or alphanumeric or hyphen code that represents the option codes available for each channel code. Varying combinations of this code will allow the customer to enhance the technical performance of the requested channel, or to further identify the type of service. It can also specify options such as data conditioning, bridging, etc. The NC optional code field is always filled.

3.4 Shared Loop NC Codes

For Interconnection – Shared Loop channels, the first two characters are UA. The third and fourth characters are hyphens to denote no additional service features.

Table 3-1 contains the available NC codes for Shared Loop channels.

Table 3-1 Available Shared Loop Network Channel Codes

Network Channel Code	Description
Line Shared Loop	
UA- -	Line Shared Loop; xDSL capable facility, shared with an existing U S WEST, Plain Old Telephone Service (POTS), Customer (Co-Provider) Provided Splitter

3.5 NCI Code Function

The NCI code is an encoded representation used to identify five interface elements located at a Point Of Termination (POT) at the CO or at the EU's location. The interface elements are physical conductors, protocol, impedance, protocol options and Transmission Level Points (TLPs). Only the first four components are used for Unbundled Loop service.

3.6 NCI Code Components

An NCI Code has four components as shown in Figure 3-2:

This example is an NCI code for a Loop Start Open-End (Switch) interface at a Central Office.

02 QB 5. OOA

- 02 — The number of wires at the interface. For this example, the code is 02 denoting a 2-wire interface.
- QB — Protocol Code. This code is a variable denoting the type and location of the interface.
- 5. — Impedance. For this example interface, the code is a 3 at the CO, denoting 900 ohms. The period following the impedance is a delimiter.
- OOA — Protocol Option Code. This code is variable denoting different options.

Figure 3-2 NCI Code Components

3.8 Shared Loop NCI Codes

Table 3-3 shows the currently available NCI codes for Shared Loop.

Table 3-3 Available Shared Loop Network Channel Interface Codes

Network Channel Interface Codes	Description
QWEST CO Interfaces	
02QB5.00A	Manual Cross-Connect Termination with no Subrating capability, ADSL, Asymmetrical Digital Subscriber Loop using Discrete Multi-Tone (DMT) per ANSI T1.413
02QB5.00C	Manual Cross-Connect Termination with no Subrating capability, ADSL, Asymmetrical Digital Subscriber Loop using Carrierless Amplitude Phase Modulation (CAP)
End- User Interfaces	
02DU5.01A	Digital Access, One POTS Channel with ADSL, Asymmetrical Digital Subscriber Loop using Discrete Multi-Tone (DMT) per ANSI T1.413
02DU5.01C	Digital Access, One POTS Channel with ADSL, Asymmetrical Digital Subscriber Loop using Carrierless Amplitude Phase Modulation (CAP)

3.9 Valid Shared Loop NC/NCI Code Combinations

Table 3-4 shows the currently available NC/NCI Code Combinations used to order Shared Loops.

Table 3-4: Valid Shared Loop NC/NCI Code Combinations

NC Code	NCI Code		Channel Description
	US WEST CO-NI	End-User EU-NI	
UA--	02QB5.00A	02DU5.01A	Line Shared Loop; Co-Provider Furnishes Splitter, DMT type ADSL
UA--	02QB5.00C	02DU5.01C	Line Shared Loop; Co-Provider Furnishes Splitter, CAP type ADSL

CONTENTS

Chapter and Section **Page**

4. Technical Specifications 4-1
4.1 General 4-1
4.2 ADSL Qualified Shared Loop 4-1

Figures

4-1 Typical ADSL Qualified Shared Loop 4-1

4. Technical Specifications

4.1 General

This chapter details the technical characteristics, available configurations, and transmission performance parameter limits for each of the Interconnection - Shared Loop compatible NCIs listed in Table 3-4.

4.2 ADSL Qualified Shared Loop

Currently, the only type of Shared Loop offered by QWEST is an ADSL Qualified Shared Loop. Figure 4-1 illustrates a typical ADSL Qualified Shared Loop configuration.

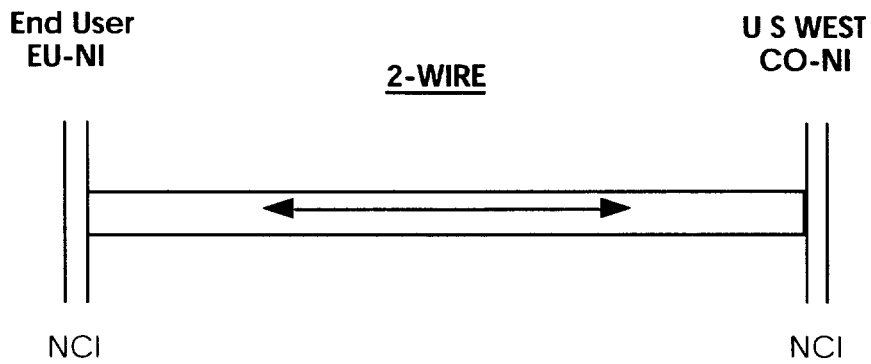

Figure 4-1 Typical ADSL Qualified Shared Loop.

The ADSL Qualified Shared Loop is a transmission path between a CO Network Interface, typically at the MDF, in a QWEST serving Central Office and the Network Interface at the end user location. The EU-NI is typically a Network Interface Device or NID. The NID divides the QWEST facility and the EU's customer installation, i.e., inside wiring and customer premises equipment. The ADSL Qualified Shared Loop is for the transport of ADSL signals that do not interfere with analog voice grade services. This offering requires that the maximum data rate be arranged for the downstream direction. That is from the CO-NI to the EU-NI.

The ADSL transport may be either Discrete Multi-Tone (DMT) or Carrierless Amplitude Phase Modulation (CAP). The ADSL Qualified Shared Loop must also support U S WEST's POTS service. The ADSL signal must be one that complies with the Spectral Compatibility Standard under development by the Accredited Standards Committee on Telecommunications, T1, Working Group T1E1.4. A CLEC's choice of appropriate Network Channel Interface codes in Table 3-3 will specify the particular application.

ADSL Qualified Shared Loops are:

- A metallic loop typically no longer than 15,000 feet of 26-gauge copper or 18,000 feet of 24-gauge copper. There is a possibility of mixed gauges.
- The EU customer must be fed by a metallic loop directly from the QWEST Central Office.
- The loop must not have any load coils on it.
- All bridge taps must be included in the total loop length.
- The sum of all bridged taps must not exceed 6,000 feet, with no individual bridged tap longer than 2,500 feet.
- Analog voice service (POTS) must be provided by U S WEST.
- The loop must have a calculated insertion loss at 196 kHz with 135-Ohm termination, based on the design on record, equal to or less than 49 dB to qualify for line sharing.

CLECs can verify Shared Loop candidates by accessing the ADSL Loop Qualification Tool available through IMA 4.2. The loop qualification tool works with either the end user telephone number or station address. IMA will provide the following local loop cable information:

- Total cable length in kilofeet
- Total bridged tap length in kilofeet
- The presence of Load Coils in the loop
- The presence of Digital Loop Electronics (DLC, UDC, etc.)
- An insertion loss calculation based on 196 kHz with 135 Ohm termination.

The ADSL Qualification program calculates the 196 kHz insertion loss of the loop design on record. The model uses 135-Ohm load terminations. Insertion loss at 196 kHz must be equal to or less than 49 dB for a loop to be ADSL Qualified.

QWEST has set a 196 kHz insertion loss threshold of 49 dB as a parameter that enables a reasonable shared loop offering. This is done in consideration of the wide range of ADSL equipment available to CLECs and the absence of standardized ADSL loop tests. In cases of repair or possible trouble, this loss is verifiable by manual testing from the CO-NI to the EU-NI.

Factors that can affect an ADSL Qualified Shared Loop's maximum data rate capabilities include:

- Central Office wiring from the CO-NI to a CLEC's equipment.
- EU's customer installation, including premises wiring, quantity and type of equipment.
- Loop loss, an ADSL Qualified Shared Loop that is close to the qualification threshold has less capabilities than one with very low loss.
- The specific variant of ADSL equipment installed by a CLEC.

QWEST cannot ensure that typical ADSL interfering signals, e.g., T1 repeatered lines or BRI ISDN lines, are not or will not be in the same or adjacent cable binder groups as an ADSL Qualified Shared Loop. Based on the above information from IMA 4.2 Loop Qualification, the CLEC can determine, at its own risk, whether the end user's local loop is ADSL qualified and can support Line Sharing.

There are end user locations served by loop facilities and transmission equipment that are not compatible with ADSL transport technical requirements, e.g., Digital Loop Carrier. This means that there are sites where ADSL is not technically feasible using the transport currently serving that location. In these cases, the loop will not qualify using the IMA 4.2 Loop Qualification Tool.

CONTENTS

Chapter and Section **Page**

5. Definitions 5-1
   5.1 Acronyms 5-1
   5.2 Glossary 5-1

5. Definitions

5.1 Acronyms

ANSI	American National Standards Institute
CLEC	Competitive Local Exchange Carrier
CO	Central Office
CO-NI	Central Office Network Interface
EU	End-User
HUNE	High Frequency Spectrum Network Element
ILEC	Incumbent Local Exchange Carrier
NC	Network Channel
NCI	Network Channel Interface
NI	Network Interface
POTS	Plain Old Telephone Service

5.2 Glossary

Bandwidth

Analog - The range of frequencies that contain most of the energy or power of a signal; also, the range of frequencies over which a circuit or system is designed to operate.

Digital - The amount of information that a signal can carry over a fixed time interval. A system with a high bandwidth can carry more information over a fixed time interval than a low bandwidth system.

Central Office (CO)

A local switching system (or portion thereof) and its associated equipment located at a wire center.

Channel

An electrical or photonic (in the case of fiber optic based transmission systems) communications path between two or more points of termination.

Decibel (dB)

The logarithmic unit of signal power ratio most commonly used in communications. It is used to express the relationship between two signal powers, usually between two acoustic, electrical, or optical signals; it is equal to ten times the common logarithm of the ratio of the two signal powers. For reference purposes, the output and input signal power is related to a specific level called a dBm, where zero dBm (Log 1 = 0) equals 1 milliwatt (mW) at a specified impedance.

End-User (EU)

The term "End-User" denotes any customer of telecommunications service that is not a carrier; except that a carrier shall be deemed to be an "End-User" to the extent that such carrier uses a telecommunications service for administrative purposes, without making such service available to others, directly or indirectly. The term is frequently used to denote the difference between a carrier interface and an interface subject to unique regulatory requirements at non-carrier customer premises (Federal Communications Commission Part 68, etc.).

Network Channel (NC) Code

The Network Channel (NC) code is an encoded representation used to identify both switched and non-switched channel services. Included in the code set are customer options associated with individual channel services, or feature groups and other switched services.

Network Channel Interface (NCI) Code

The Network Channel Interface (NCI) code is an encoded representation used to identify five (5) interface elements located at a Network Interface at a customer location. The Interface code elements are: Total Conductors, Protocol, Impedance, Protocol Options, and Transmission Level Points (TLP).

Network Interface (NI)

The point of demarcation on the End-User's premises at which the U S WEST Communications, Inc.'s responsibility for the provision of Access or Non-Access service ends.

Protocol Code

The Protocol (character positions 3 and 4 of the NCI Code) is a two-character alpha code that defines requirements for the interface regarding signaling and transmission.

CONTENTS

Chapter and Section **Page**

6. References 6-1
- 6.1 American National Standards Institute Documents 6-1
- 6.2 Institute of Electrical and Electronics Engineers Publications 6-1
- 6.3 International Telecommunication Union Recommendations 6-1
- 6.4 QWEST Publications 6-1
- 6.5 Federal Communications Commission Documents 6-1
- 6.6 Telcordia Documents 6-2
- 6.7 Ordering Information 6-2
- 6.8 Trademarks 6-3

6. References

6.1 American National Standards Institute Documents

ANSI T1.102-1993 *Telecommunications - Digital Hierarchy - Electrical Interfaces*

ANSI T1.107-1995 *Telecommunications - Digital Hierarchy -Formats Specifications*

ANSI T1.223-1991 Telecommunications - *Information Interchange-Structure and Representation of Network Channel (NC) and Network Channel Interface (NCI) Codes for the North American Telecommunications System.*

ANSI T1.401-1993 Telecommunications - *Interface between Carriers and Customer Installations - Analog Voicegrade Switched Access Lines Using Loop-Start and Ground-Start Signaling.*

ANSI/IEEE 820-1984 (Reaffirmed 1993) *IEEE Standard Telephone Loop Performance Characteristics.*

ANSI Technical Report 60 *Unbundled Voicegrade Analog Loops*, July, 1999.

6.2 Institute of Electrical and Electronics Engineers Publications

IEEE Std 100-1992 *The New IEEE Standard Dictionary of Electrical and Electronics Terms [Including Abstracts of All Current IEEE Standards].* Institute of Electrical and Electronics Engineers, Inc. Copyright © 1993.

IEEE Std 743-1984 (Reaffirmed 1992) *IEEE Standard Methods and Equipment for Measuring the Transmission Characteristics of Analog Voice Frequency Circuits.* Institute of Electrical and Electronics Engineers, Inc.

6.3 International Telecommunication Union Recommendations

G.701 *Vocabulary of Digital Transmission, Multiplexing and Pulse code Modulation (PCM) Terms*

6.4 Qwest Publications

Service Interval Guide Updated twice yearly. This is also available through the Interconnect Services Center.

PUB 77386 *Expanded Interconnection and Collocation for Private Line Transport and Switched Access Services.* Issue B, April 1997.

PUB 77320 *Private Line Services*, Issue B, October 1989.

6.5 Federal Communications Commission Documents

Code of Federal Regulations 47, Part 68.

6.6 Telcordia Documents

GR-499-CORE Telcordia, *Transport Systems Generic Requirements (TSGR): Common Requirements,*

GR-1089-CORE *Electromagnetic compatibility and Electrical Safety Generic Criteria for Network Telecommunications Equipment*

SR-STS-000307 Telcordia, *Industry Support Interface (ISI): NC/NCI Code Dictionary*, Issue 4, February 1993.

SR-2275 Telcordia, *Notes on the Networks*, Issue 3, December, 1997.

6.7 Ordering Information

All documents are subject to change and their citation in this document reflects the most current information available at the time of printing. Readers are advised to check status and availability of all documents.

Ordering Information for those who are not Qwest employees:

For American National Standards Institute (ANSI) documents contact:

American National Standards Institute
Attn.: Customer Service
11 West 42nd Street
New York, NY 10036
Phone: (212) 642-4900
Fax: (212) 302-1286
HTTP URL: http://www.ansi.org/

ANSI has a catalog available that describes their publications.

For Telcordia documents contact:

Telcordia Customer Relations
8 Corporate Place, PYA 3A-184
Piscataway, NJ 08854-4156
Fax: (908) 336-2559
Phone: (800) 521-CORE (2673) (U.S. and Canada)
Phone: (908) 699-5800 (Others)
HTTP URL: http://www.bellcore.com/

For IEEE documents contact:

Institute of Electrical and Electronics Engineers, Inc.
345 East 47th Street
New York, NY 10017-2394
HTTP URL: http://www.ieee.org/

For International Telecommunications Union documents contact:

International Telecommunications Union
General Secretariat
Place des Nations, CH-1211
Geneva 20, Switzerland
HTTP URL: http://www.itu.ch/

For Qwest Technical Publications from:

HTTP URL: http://www.uswest.com/techpub

For Federal Communications Commission (FCC) documents contact:

Superintendent of Documents
Government Printing Office
Washington, D. C. 20402
Phone: (202) 783-3238
HTTP URL: http://www.fcc.gov/

Employees of Qwest Corporation shall contact:

Central Distribution Center (CDC)
1005 17th St. S-75
Denver, CO 80202
Telephone: (303) 896-9446
Fax: (303) 965-8652

Most Qwest publications are available to employees on the company network (E*MEDIA). Call 303-965-0707 for further information.

6.8 Trademarks

Qwest® Registered Trademark of Qwest Communications International Inc.

CONTENTS

Chapter and Section **Page**

1. Introduction 1-1
- 1.1 General 1-1
- 1.2 Reason for Reissue 1-1
- 1.3 Scope 1-1
- 1.4 Qualified Shared Loops 1-1
- 1.5 Concept Diagram of a Shared Loop 1-2

Figures

1-1 Shared Loop Concept Diagram 1-2

U S WEST, Inc.		@Link Networks, Inc.
John A. Kelley		Tim O'Neill
President – Wholesale Markets		Chief Network Officer
Date 4/21/00		Date

Arrival Communications, Inc.		BridgeBand Communications, Inc.
Kevin Timpane		Jon M. Hesse
Vice President – Policy and Carrier Management		Chief Operating Officer and In-House Counsel
Date		Date 4/24/'00

CDS Networks, Inc.		Contact Communications
Cleve Tooker		Arlen Taggart
President		Vice President
Date		Date

DIECA Communications, Inc.		Jato Communications Corp.
Timothy Lachy		Patrick M. Greene
Chief Financial Officer		Vice President – Carrier Relations
Date		Date