ORIGINAL

EX PARTE OR LATE FILED

COLUMBIA
BUSINESS
SCHOOL

Columbia University
Graduate School
of Business

809 Uris Hall
New York NY 10027
212 854 4222
Fax 212 932 7816

Columbia Institute for
Tele-Information

RECEIVED
DEC 22 2000
FCC MAIL ROOM

December 19, 2000

Magalie R. Salas, Esq.
Secretary
Federal Communications Commission
445 12th St. SW
Washington, DC 20554

RE: EX PARTE FILINGS for CC Docket Nos. 99-68 (Inter-Carrier Compensation for ISP-Bound Traffic), 96-98 (Local Competition), CC Docket No. 96-98 (Local Competition), CC Docket Nos. 96-262 (Access Charge Reform), 94-1 (Price Cap Performance Review), 99-249 (Low-Volume Long Distance Users), 96-45 (Universal Service).

Dear Ms. Salas:

On Wednesday, December 13, 2000, Columbia Institute for Tele-Information ("CITI") convened a "Stakeholder Workshop" for experts from constituencies that have significant stakes in interconnection compensation systems. Since members of the Commission's staff attended the workshop and topics associated with the above-referenced dockets were discussed during the workshop, the Institute is filing this *ex parte* notice in these dockets.

Sincerely,

Kenneth R. Carter, Esq.
Deputy Director, CITI

cc: attendees

ATTENDEES

Jim Alleman	University of Colorado/CITI
Michael Altschul	CTIA
Rebecca Arbogast	FCC
Jonathan Askin	ALTS
Bob Atkinson	CITI
Jay Atkinson	FCC
Dorothy Attwood	FCC
Chris Barnekov	FCC
Scott Bergman	FCC
Rebecca Beynon	FCC
Bob Blau	BellSouth
Jerry Brock	George Washington University
Mary Brown	Worldcom
Ken Carter	CITI
Bob Crandall	Brookings Institution
Larry Darby	Darby Associates
Pat DeGraba	Charles River Associates
Gary Epstein	Latham & Watkins
Gerry Faulhaber	FCC
Claudia Fox	FCC
Jordan Goldstein	FCC
Frank Gumper	Verizon
Bert Halprin	Halprin, Temple, Goodman & Maher
Dale Hatfield	FCC
David Hotstetter	SBC
Jane Jackson	FCC
Stacy Jordan	FCC
Dick Juhnke	Sprint
Michael Katz	University of California-Berkley
John Kure	Qwest
Jonathan Lee	CompTel
Joseph Levin	FCC
Joel Lubin	AT&T
Richard Metzger	Lawler, Metzger & Milkman
Johana Mikes	FCC
Paul Moon	FCC
Chris Murray	Consumers Union
John Nakahata	Harris Wiltshire & Grannis
Eli Noam	Columbia Business School/CITI
Mike Noll	USC-Annenberg/CITI
Carl Northrop	Paul, Hastings, Janofsky & Walker LLP, and PCIA
Tricia Paoletta	Level 3
Robert Pepper	FCC
Tamara Preiss	FCC

Jeff Prisbey	FCC
Brad Ramsey	NARUC
Jim Schlichting	FCC
Florence Setzer	FCC
Bill Sharkey	FCC
Virginia Sheffield	Genuity
Larry Strickling	CoreExpress, Inc.
Walt Strack	FCC
Pete Sywenki	Sprint
Doug Webbink	FCC
Cheryl Tritt	Morrison & Foerster
Paul Vasington	Commissioner, Mass. DTE
Kathy Wallman	Wallman Strategic Consulting
Paul Zimmerman	FCC
Jesscia Zufolo	NARUC

COLUMBIA INSTITUTE FOR TELE-INFORMATION

A Sloan Foundation Center on the Telecommunications Industry

COLUMBIA BUSINESS SCHOOL

CITI Interconnection Pricing Workshop
Minutes

On Wednesday, December 13, 2000, the Columbia Institute for Tele-Information (CITI) convened a "Stakeholder Workshop" for experts from constituencies that have significant stakes in interconnection compensation systems. The Workshop addressed the seemingly intractable problem affecting the telecommunications business: the mechanisms by which networks compensate one another for carrying and terminating traffic.

The existing interconnection systems, each based on how the traffic is classified (local, long distance, wireless, Internet), are being blurred as technology and services "converge." The Workshop's primary objective was to determine if stakeholders can agree on what a unified interconnection compensation system should look like, taking into account the possible impact of such a system on consumer rates and related public policy concerns. The Workshop also sought to identify the chief areas of disagreement, providing the stakeholders and policymakers with a clearer understanding of the issues.

Robert Atkinson, Executive Director of CITI, convened the meeting at 10:00 AM. He noted the ground rules for the discussion at the workshop. Atkinson stated the purpose of the workshop was to see if there is any consensus on how to resolve intercarrier interconnection compensation disputes. To encourage a free flow of ideas and comments, he asked all attendees to agree that all comments would be "off the record," in the sense that no attendee would use the comments made by another attendee in other fora. No attendee objected to this ground rule.

Eli Noam, Professor of Economics and Finance at Columbia Business School, and Director of CITI, welcomed the attendees and noted the historical significance of interconnection as a means to implement policy.

Agenda

The Workshop adopted the proposed agenda. (Attachment 1)

Agenda Item 1: Current Interconnection Systems

The Workshop started with a brief summary of the existing interconnection pricing systems followed by a review of alternative theories and proposals. Five participants made brief presentations on how interconnection compensation systems currently work.

John Nakahata of Harris Wiltshire & Grannis described on the different types of fixed-wireline networks and typical access charges. (Attachment 2). Michael Altschul of CTIA

described the mobile telephone (i.e., CMRS) interconnection regime. He described the types of interconnection. (Attachment 3).

Carl Nothrop of Paul, Hastings, Janofsky & Walker LLP, representing PCIA, explained paging-LEC termination compensation. He stated that most traffic is within MTA and that the LEC pays for all or most of the transport to the paging carriers point of interface. He estimated that interconnection costs in the paging industry are on the order of multimillion dollars per year, but not greater. He handed out a summary of paging interconnection agreements. (Attachment 4).

Jonathan Askin from ALTS described interconnection between incumbent LECs and competitive LECs. He said that per minute charges typically range from 0.27¢ to 0.55¢, but are coming down toward 0.10¢ per minute in recent agreements.

Virginia Sheffield from Genuity described Internet interconnection such as private peering, public peering and transit, and how they differ from the system of access charges used by LECs and IXCs.

Two other types of interconnection were noted during the discussion: between CMRS providers and between CLECs.

One academic observed that the per minute termination rates for different types of calls wireless, paging, and interexchange were 0.3¢, 0.4¢, 0.55¢, respectively. He further observed that the spread between these rates was already quite small and that the rate structure problem was likely to converge based on technological pressures. He also suggested that measures other than minutes might be used. One such measure for termination access charges might be based on the number of information packets.

Agenda Item 2: Guiding Principles: What should an "ideal" interconnection system be? What should it avoid?

Bob Atkinson of CITI distributed "Some Principles for Discussion" to stimulate discussion on what principles should go into reforming the interconnection regime. (Attachment 5). One attendee suggested an additional principle: minimizing cash payments to reduce arbitrage incentives.

One participant posed the question of whether reforming interconnection regimes was "worth the candle." An attorney present suggested that the benefits of reforming the current regime might not be worth the costs. An industry representative stated that any new form of compensation should minimize incentives for gaming and arbitrage, by minimizing intercarrier payments. It was observed that minimizing payments should focus service providers on serving retail customers and not on arbitrage. However, one observer replied that arbitrage is a self-rectifying method which drives prices to costs.

Another participant suggested that the fundamental question to ask in considering whether creating a new regime is worthwhile is one of market power. If incumbent carriers do not

have the market power "tip" the market in their favor by making other carriers interconnect as customers, then new regulation is not necessary. It was also suggested that it should be unnecessary to regulate interconnection between similar size carriers, because these networks will negotiate efficient interconnection agreements. However, regulation is needed where one firm has the market power to effect competition.

It was further suggested that the decision to institute a new regime was a policy question, whose outcome is based largely on political power. The uncertainty and major "political angst" associated with creating a new regime may act as a disincentive to investment and innovation.

The discussion turned to questioning what is wrong with the *status quo* and whether the *status quo* creates distortions in consumer welfare and investment, and encourages arbitrage. It was observed that changes to the *status quo* should not cause uncertainty and delay, require constant intervention, lead to resource misallocation and under investment; and deter innovation.

It was suggested that bill-and-keep interconnection pricing would create an incentive for carriers to minimize costs.

Agenda Item 3: Explanation of alternative proposals

Policy presented a summary (Attachment 6) of a proposed new system of inteconnection charges called Central Office Bill-and-Keep (COBAK). The purpose of COBAK is to eliminate the problems of the current system of wireline interconnection by reducing regulatory arbitrage, eliminating access monopolies, minimizing the need for regulatory decision-making, and eliminating pressure on retail rates. COBAK is a default interconnection regime, to be implemented if carriers cannot reach negotiated solution. There is the expectation that carriers would negotiate efficient interconnection arrangements against the COBAK default. COBAK is based on two rules: 1) there are no termination charges for loops and serving central office switching and 2) the calling party's network incurs the cost of transport to the called party's serving central office. The COBAK model was built on the rationale that both the called and calling parties "cause" costs so that it is economically sound to recover interconnection costs from both parties. This system is described in OPP Working Paper Number 33: Bill and Keep at the Central Office as the Efficient Interconnection.

Jay Atkinson of the FCC Common Carrier Bureau staff described the paper "Competitively Neutral Network Interconnection", which was released as OPP Working Paper 34. This paper suggested that a default bill-and-keep is competitively neutral and encourages efficient subscription and interconnection.

Agenda Item 4: Discussion of alternative proposals

Comments were made addressing the COBAK concept (OPP Working Paper Number 33). One participant noted that end user charges are rate-regulated, making it politically difficult to recover all of the cost of the local loop and central office switching directly from end users. The problem of defining what constitutes a "central office" was also raised. One industry representative raised the issue of how deaveraging would effect the recovery of costs now made through terminating access charges, SLCs, and PICCs.

One observer stated that we know the drawback of the existing regimes, but asked what might be the problems inherent in a new system? One issue posed is how to handle situations where traffic exchanged between carriers is unbalanced, citing the example of high volume originators (such as telemarketers) or instances of unbalanced incoming traffic which could create money pumps. Another potential pitfall cited is that turning telecommunications rates into flat end user charges could stifle growth and innovation.

One observer pointed out the industry has just sorted out radical change in interconnection over the last four years. In light of that consideration, it may not be worthwhile to start over by changing the system (i.e., "The devil you know versus the devil you don't know.")

Another participant observed that the rapid changes taking place in the Internet make it inadvisable to apply the old regulatory system of telecommunications interconnection for circuit switched networks to networks which will likely transition entirely to packet switched networks. This transition is likely to take place over the next 5 to 10 years.

One participant questioned what were the implications of always-on services such as DSL when per minute compensation charges designed for on/off networks are used.

Agenda Item 5 Summary & Conclusion. Any consensus? Any "next steps"?

Bob Atkinson ended the discussion and asked for input on potential next steps. A representative from the FCC asked the participants to keep an open mind in light of the FCC's long-term goals and further noted that the FCC may adopt an NOI on some interconnection pricing issues in January.

The moderator concluded the workshop at approximately 5:00 PM and thanked the participants.

Prepared by: 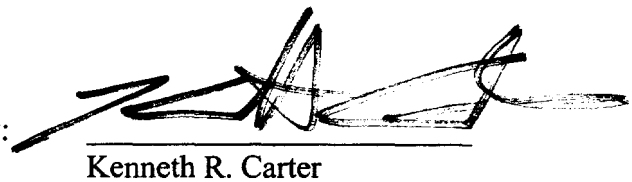

Kenneth R. Carter
Deputy Director, CITI
December 20, 2000

Exhibits

Attachments (Distributed During the Workshop)

Attachment 1:
Agenda.

Attachment 2:
Overview of Interstate Access Charges for Price Cap LECs, John T. Nakahata, Harris, Wiltshire & Grannis, LLP.

Attachment 3:
Cellular Mobile Carrier to Local Exchange Carrier Switched Interconnection Configurations (Type 1, Type 2A, and Type 2B), Michael Altschul, CTIA.

Attachment 4:
LEC-Paging Interconnection Agreements, Carl Northrop, PCIA.

Attachment 5:
Some Principles for Discussion, Bob Atkinson, CITI.

Attachment 6:
COBAK Interconnection, Patrick DeGraba, Charles River Associates.

Other Papers Made Available to Attendees:
OPP Working Paper Number 34: Bill and Keep at the Central Office as the Efficient Interconnection, Patrick DeGraba, OPP.

OPP Working Paper Number 34: A Competitively Neutral Approach to Network, Jay Atkinson, Common Carrier Bureau.

Diagram on Interconnection Types, Dale Hatfield, FCC.

White Paper on Interconnection, James Alleman, University of Colorado – CITI.

Interconnection Problems: A Framework for Discussion, Gerald W. Brock, The George Washington University.

The Theory of Access Pricing and Interconnection, Mark Armstrong, Oxford University.

COLUMBIA INSTITUTE FOR TELE-INFORMATION

A Sloan Foundation Center on the Telecommunications Industry

COLUMBIA BUSINESS SCHOOL

IS CONVENING AN INVITATION-ONLY

STAKEHOLDERS' WORKSHOP ON INTERCONNECTION PRICING

December 13; 10:00am - 5:00pm

USC Washington Center
512 Tenth Street, N.W.
Washington, D.C.

Columbia Institute for Tele-Information (CITI) is convening a Workshop to address the seemingly intractable problem affecting the telecommunications business: how one network is compensated for carrying and terminating traffic originated on another network. Several different compensation systems are used, each based on how the traffic is classified (local, long distance, wireless, Internet) and the goals of the affected industries and policymakers.

The traditional classifications blur as technology and services "converge." Will the differing compensation systems inevitably have to merge into a single uniform system? This will have significant implications for consumers, industry competitors and public policy.

This *invitation-only* "Stakeholder Workshop" is for experts from constituencies that have significant stakes in interconnection compensation systems. A primary objective of the Workshop will be to determine if stakeholders can agree on what a unified interconnection compensation system should look like, taking into account the possible impact of such a system on consumer rates and related public policy concerns. The Workshop should also identify the chief areas of disagreement, providing policymakers with a clearer understanding of the issues, and may be able to develop a process for moving forward.

With these goals in mind, the Workshop will start with a brief summary of the existing interconnection pricing systems followed by a review of alternative theories and proposals. Policymakers, industry representatives, academics, consumer advocates, state regulators and other stakeholders will then comment and contribute to the discussion. FCC staff will observe and may participate.

The support and cooperation of the Annenberg School for Communication and the School of Policy, Planning, and Development of the University of Southern California are gratefully acknowledged.

INTERCONNECTION PRICING WORKSHOP
December 13, 2000

PROPOSED AGENDA

10:00-10:15	Introductions and Ground Rules
10:15-10:35	Current Interconnection Systems: Four 5 minute Tutorials (CALLS/Access Charges; LEC-CLEC; CMRS-LEC; Paging-LEC)
10:35-11:15	Guiding Principles: What should an "ideal" interconnection system be? What should it avoid?
11:15-11:30	Break
11:30-12:30	Guiding Principles (conclude); Begin explanation of alternative proposals (initially by ex-FCC Economists, ex-CCB Chiefs)
12:30-1:30	LUNCH (lunch provided for attendees)
1:30-3:30	Discussion of alternative proposals (i.e., Jerry Brock's paper, OPP Working Papers)
3:30-3:45	Break
3:45-4:30	Further discussion of alternative proposals
4:30-5:00	Summary & Conclusion. Any consensus? Any "next steps"?

NOTE: No formal after-Workshop social event is planned but attendees are encouraged to continue the discussion at dining establishments in the neighborhood

FOR FURTHER INFORMATION

Please contact Bob Atkinson, Executive Director of CITI, at 212-854-7576, e-mail: rca53 @columbia.edu

INTERCONNECTION PRICING WORKSHOP
December 13, 2000

CONFIRMED ATTENDEES

ACADEMIA

Jim Alleman	University of Colorado/CITI
Bob Atkinson	CITI
Bob Crandall	Brookings Institution
Eli Noam	Columbia Business School/CITI
Mike Noll	USC-Annenberg/CITI
Ken Carter	CITI

FORMER FCC OFFICIALS (Chief Economists, Common Carrier Bureau Chiefs)

Jerry Brock	George Washington University
Larry Darby	Darby Associates
Pat DeGraba	Charles River Associates
Gary Epstein	Latham & Watkins
Bert Halprin	Halprin, Temple, Goodman & Maher
Michael Katz	University of California-Berkley
Richard Metzger	Lawler, Metzger & Milkman
John Nakahata	Harris Wiltshire & Grannis
Larry Strickling	CoreExpress, Inc.
Cheryl Tritt	Morrison & Foerster
Kathy Wallman	Wallman Strategic Consulting

TELECOMMUNICATIONS INDUSTRY

Michael Altschul	Cellular Telecommunications Industry Assn. (CTIA)
Bob Blau	BellSouth
Mary Brown	Worldcom
John Kure	Qwest
Frank Gumper	Verizon
David Hotstetter	SBC
Dick Juhnke	Sprint
Jonathan Lee	Competitive Telecommunications Assn. (CompTel)
Joel Lubin	AT&T
Carl Northrop	Personal Communications Industry Assn (PCIA)
Tricia Paoletta	Level 3
Virginia Sheffield	Genuity
Jonathan Askin	Assn. For Local Telecommunications (ALTS)

CONSUMERS

Gene Kimmelman (or Chris Murray)	Consumers Union

STATE REGULATORS

Paul Vasington	Commissioner, Mass. DTE
Brad Ramsey	NARUC

FEDERAL COMMUNICATIONS COMMISSION

Rebecca Arbogast
Jay Atkinson
Dorothy Attwood
Chris Barnekov
Rebecca Beynon
Kathy Brown
Gerry Faulhaber
Jordan Goldstein
Anna Gomez
Dale Hatfield
Jane Jackson
Robert Pepper
Jim Schlichting
Bill Sharkey
Deena Shetler
Tom Sugrue
Doug Webbink

Overview of Interstate Access Charges for Price Cap LECs

John T. Nakahata
Harris, Wiltshire & Grannis, LLP

Corrected

Interstate Access: Pre-CALLS

- Loop & Port:
  - End User – SLCs
  - IXC flat - PR/NPR PICC, MLB PICC ($2.60)
  - IXC Per Min.
    - Orig. CCL (.002984)
    - Term. CCL (.000502)
- Switch:
  - IXC Per Min (.005234)
- Trunks: (.004114)
  - Dedicated: IXC Per Mile
  - Common: IXC Per Min.
- Info. Surcharge (.000213)

ATS Charge

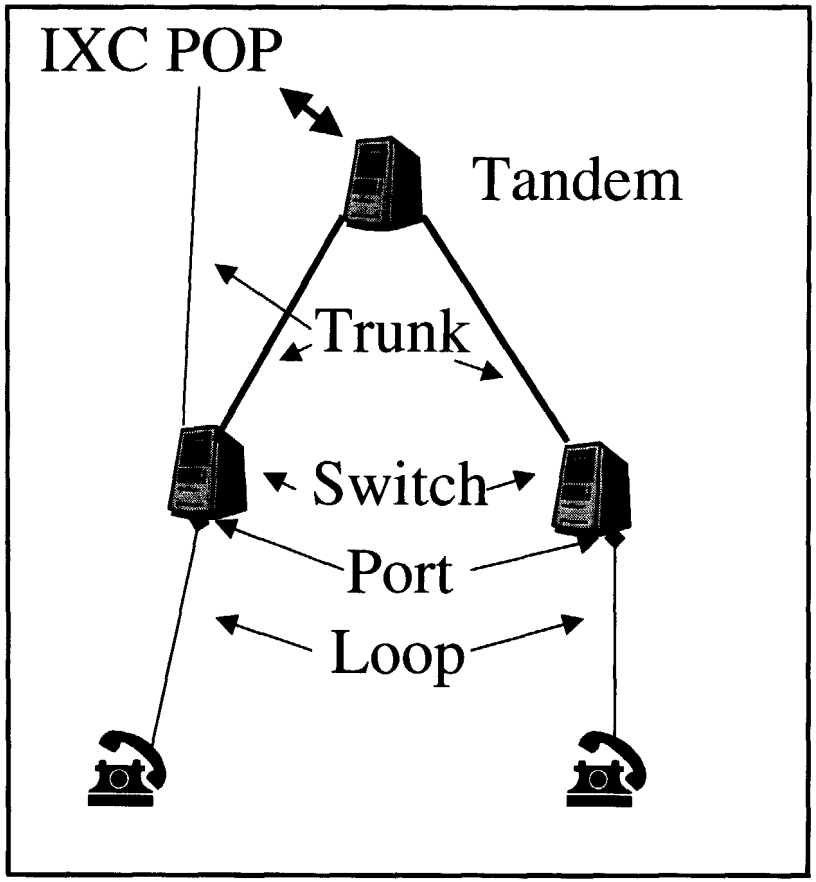

Interstate Access: Post-CALLS

- Loop & Port:
  - USF -- $650 million
  - End User – SLCs (↑ PR)
  - IXC flat -- MLB PICC ($2.35 → ~ 0.10)
  - IXC Per Min.
    - Orig. CCL (.001327 →~0)
    - Term. CCL (.000015→~0)
- Switch:
  - IXC Per Min. (.002940)
- Trunks: (.002323)
  - Dedicated: IXC Per Mile
  - Common: IXC Per Min.

ATS Charge

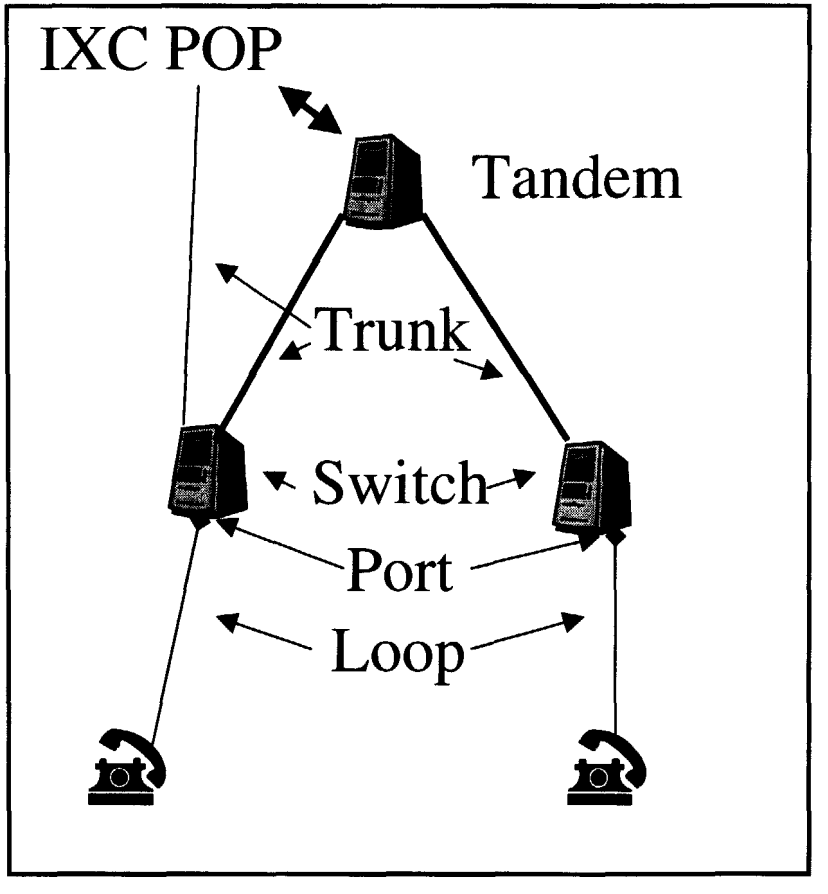

Average Traffic Sensitive Charge

- Target Rates
  - RBOCs/GTE = $0.0055
  - Mid-Size Price Caps = $0.0065
  - Very Rural Price Caps = $0.0095
  - June 2000 Tariffs Industry Average = $.0062 (from ~$.0095)
- Once hit Target Rate, X = Inflation
- 5 year stability

Geographic Deaveraging & USF

- USF – Support provided by UNE geographic zone if UNE loops deaveraged.
- SLCs – Can be deaveraged by UNE geographic zone once MLB PICC and CCL = 0, subject to some constraints.
- Low Income Support – Keyed to customer SLC so support amount will vary by geographic zone. Customer pays no SLC.

LITI EX PARTE

ATTACHMENT 3

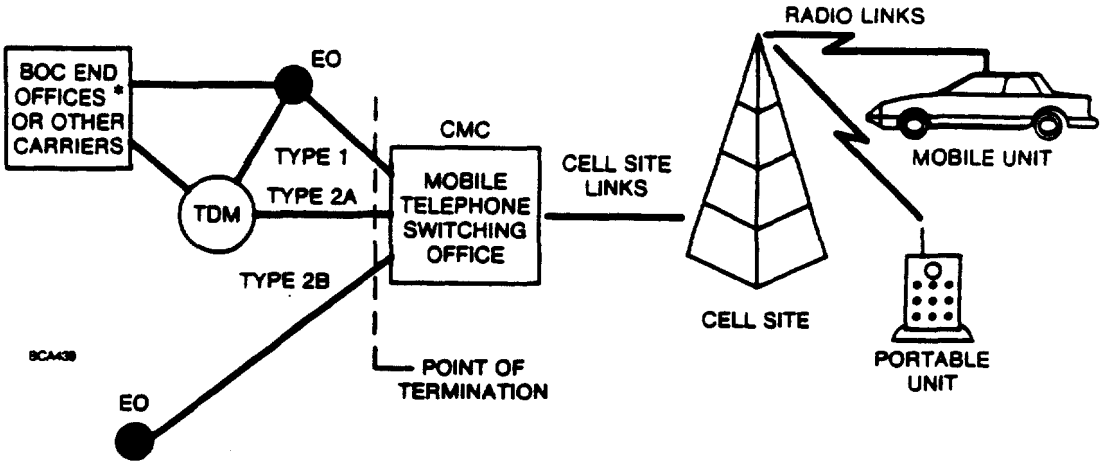

Figure 16-1. Cellular Mobile Carrier to Local Exchange Carrier Switched Interconnection Configurations (Type 1, Type 2A, and Type 2B)

* BOC end offices are covered under the Local Exchange Carrier (LEC) designation in the documents referenced in this section (e.g., TR-EOP-000352, "Cellular Mobile Carrier Interconnection Transmission Plans".

via interconnection circuits. These circuits have been classified as one of three interconnection options (Type 1, 2A or 2B) and are explained further in part 2.0.

2.0 Interconnection Types

DESCRIPTION

2.01 There are various switched interconnection alternatives available for the interconnection of a cellular mobile system with a BOC network. Three specific types of interconnections are identified in this section: connection through a BOC end office (Type 1), direct CMC connection with a BOC tandem office (Type 2A), and direct connection limited to a specific BOC end office (Type 2B). CMC connection to the BOC Local Access and Transport Areas (LATAs) and other carriers [e.g., another CMC, other exchange carriers, or Interexchange Carriers (ICs)] for Type 1 and Type 2A is provided through the BOC interface switch. The Type 2B option is used only for interconnection with NXXs served by a specific end office. The Type 2B interconnection may be used in conjunction with the Type 2A tandem interconnection on a high-usage alternate routing basis. The network configurations and interconnection designations for the three options are illustrated in Figure 16-1.

TYPE 1

2.02 The Type 1 interconnection is between the CMC-designated POT and a BOC end office switching system that enables a path to be established between the CMC's MTSO and the BOC end office. The CMC establishes connections to other end offices and other carriers through this interconnection.

TYPE 2A

2.03 The Type 2A interconnection is at the POT of a trunk between a cellular MTSO and a designated BOC tandem switching system. Through this option, the CMC can establish intra-LATA connections to BOC end offices connected to the tandem and to other carriers interconnected through the tandem. Type 2A interconnection may be used on an inter-LATA basis through proper arrangements with the ICs.

TYPE 2B

2.04 The Type 2B interconnection is at the POT of a trunk between a cellular MTSO and a BOC end office switching system. Through this option, the CMC establishes connections to NXXs served by the one end office to which it is interconnected. A Type 2B interconnection may be used in conjunction with the Type 2A on a high-usage alternate routing basis to serve high-volume traffic between the MTSO and the BOC end office.

LEC-PAGING INTERCONNECTION AGREEMENTS

PARTIES TO AGREEMENT	DATE OF AGREEMENT	TERM OF AGREEMENT	STATES COVERED	EXECUTED PURSUANT TO	COVERAGE OF TYPE 1/TYPE 2 ARRANGEMENTS	REQUIRED POINTS OF CONNECTION	TERMINATION COMPENSATION RATES PAID TO PAGING CARRIER	PERCENT OF TRAFFIC WHICH IS SUBJECT TERMINATION COMPENSATION PAYMENT	PERCENT OF TRAFFIC SUBJECT RELIEF FROM EXCHANGE CHARGES
Pacific Bell and Cook Telecom, Inc.	March, 1998 (ultimate agreement filed in arbitration proceeding)	2 years, continuing to be effective thereafter pending renegotiation (§14.1)	California	47 U.S.C. §252	Type 1 and Type 2 (§2.1.1)	At least one POI required in each LATA where parties exchange traffic (§2.1.4); a POI is required for each routing point assigned to an NXX; rating and routing points need not be the same, but must be in the same LATA (§§1.4.5, 2.1.5, 2.1.4)	$.002108 per local paging call, reduced to $.00156 multiplied by all calls pending ability to track non-local and transitting calls (§3.1.1, as amended) [this figure includes an adjustment excluding non-local paging calls as required by the state commission's arbitration order]	74% [Phase II decision in arbitration proceeding before California PUC; Case No. A.97-02-003.] [termination compensation rate adjusted to reduce compensation per paging call by 26%]	Recurring charges are borne in proportion to the percent of local traffic originated by each of the parties, currently set at 74% (§3.2)
GTE and AirTouch	July, 1988	2 years from effective date, with "evergreen provision" allowing for indefinite continuation until a notice of termination is given by either side, in which case the agreement continues in effect until superseded by another or for 161 days (Article III, §2.1)	California Florida Indiana Kentucky Ohio Texas Virginia Washington	47 U.S.C. §252	Type 1 and Type 2 (Appendix B)	POI locations are negotiated on an ad hoc basis; rating and routing points need not be the same, but must be located in the same LATA (Article IV, §4.1)	$20.00 per month per DSO or its equivalent for tandem connections or where full NXXs are used by AirTouch on end office interconnections; $5.00 per month per DSO or its equivalent where AirTouch has been provided with blocks of 100 numbers; numbers may be "ported" from the end office to the tandem and then treated as Type 2 (Appendix B)	70% (Appendix B)	70% of facilities charges to the POI except for mileage beyond 90 miles or the LATA boundary, (whichever is nearer). (§12.2)

PARTIES TO AGREEMENT	DATE OF AGREEMENT	TERM OF AGREEMENT	STATES COVERED	EXECUTED PURSUANT TO	COVERAGE OF TYPE 1/ TYPE 2 ARRANGEMENTS	REQUIRED POINTS OF CONNECTION	TERMINATION COMPENSATION RATES PAID TO PAGING CARRIER	PERCENT OF TRAFFIC WHICH IS SUBJECT TO TERMINATION COMPENSATION PAYMENT	PERCENT OF TRAFFIC SUBJECT TO RELIEF FROM FACILITIES CHARGE
Bell Atlantic and Paging Networks, Inc.	December, 1998	from effective date until December 1, 2000	Delaware Maine Maryland Massachusetts New Hampshire New Jersey New York Pennsyl vania Rhode Island Vermont Virginia Washington, D.C. West Virginia	47 U.S.C. §§ 251, 252, 332	Type 1 and Type 2 (§3.1)	Interconnection can be at an end office, access tandem, or other specified point (§3.1.2) Parties agree that present interconnections are efficient (§3.1.4)	Base agreement provides for $ .002 per minute of use, unless otherwise agreed (§4.6.2); subsequent agreement provides for the following rates (§4.6.7) DE $0.001957/mou ME $0.005700/mou MD $0.003300/mou MA $0.005700/mou NH $0.005700/mou NJ $0.003738/mou NY $0.006200/mou PA $0.002900/mou RI $0.005700/mou VT $0.005700/mou VA $0.005000/mou D.C. $0.005000/mou WV $0.005000/mou	95% (Letter between parties)	85% from effective date until 90 days thereafter; 90% from the 91st day until a percentage based on results of a study can be implemented (§4.5.3)

PARTIES TO AGREEMENT	DATE OF AGREEMENT	TERM OF AGREEMENT	STATES COVERED	EXECUTED PURSUANT TO	COVERAGE OF TYPE 1/ TYPE 2 ARRANGEMENTS	REQUIRED POINTS OF CONNECTION	TERMINATION COMPENSATION RATES PAID TO PAGING CARRIER	PERCENT OF TRAFFIC WHICH IS SUBJECT TO TERMINATION COMPENSATION PAYMENTS	PERCENT OF TRAFFIC SUBJECT TO RELIEF FROM FACILITIES CHARGES
GTE and Network Services	January, 1999	minimum of 2 years from effective date, with "evergreen provision" allowing for indefinite continuation until a notice of termination is given by either side, in which case the agreement continues in effect until superseded by another or for one additional year, whichever is less (Article III, §2.1)	California	47 U.S.C. §252	Type 1 and Type 2 (Appendix B)	POI locations are negotiated on an ad hoc basis; rating and routing points need not be the same, but must be located in the same LATA (Article IV, §4.1)	$20.00 per month per DSO or its equivalent for tandem connections or where full NXXs are used by Network Services on end office interconnections; $5.00 per month per DSO or its equivalent where Network Services has been provided with blocks of 100 numbers (Appendix B)	74% (Appendix B)	74% of facilities charges to the POI except for mileage beyond 90 miles or the LATA boundary, (whichever is nearer). If GTE declines to provision intercarrier facility, Network Services can order facility from a third party and GTE will reimburse it for 74% the resultant expenses, subject to the mileage limitation. (§12.2)

PARTIES TO AGREEMENT	DATE OF AGREEMENT	TERM OF AGREEMENT	STATES COVERED	EXECUTED PURSUANT TO	COVERAGE OF TYPE 1/TYPE 2 ARRANGEMENTS	REQUIRED POINTS OF CONNECTION	TERMINATION COMPENSATION RATES PAID TO PAGING CARRIER	PERCENT OF TRAFFIC WHICH IS SUBJECT TO TERMINATION COMPENSATION PAYMENT	PERCENT OF TRAFFIC SUBJECT TO RELIEF FROM FACILITIES CHARGES
Ameritech and Paging Networks, Inc.	March, 1999	2 years from effective date	Ohio Illinois Indiana Michigan Wisconsin	47 U.S.C. §§ 251, 252	Type 1 and Type 2 (based on context), but Type 1 to be phased out (§6.1)	For land to mobile traffic, a single POI in each LATA. For mobile to land traffic, must deliver traffic to each Ameritech tandem (§3.2.3) Parties agree that present interconnections are efficient (§3.2.3)	Base agreement provides for $.002 per minute of use, unless otherwise agreed (§7.1); limited payment for Type 1 traffic (§6.1). Concurrent amendment provides for the following rates (§7.3) IL $0.0053/mou IN $0.0057/mou OH $0.0059/mou MI $0.0051/mou WI $0.0053/mou	90% in Ohio, Illinois, Indiana and Wisconsin; 95% in Michigan (§7.3, as amended)	90% (§3.2.4)
Sprint and Paging Networks, Inc.	April, 1999	Through March 31, 2001	Florida Indiana Kansas Minnesota Missouri Nebraska New Jersey North Carolina Ohio Oregon Pennsylvania South Carolina Tennessee Texas Virginia Washington	47 U.S.C. §§ 251, 252, 332	Type 1 and Type 2 (§29.1.2)	At least 1 physical POI in each LATA PageNet serves containing a Sprint serving wire center in which the parties exchange traffic, except that PageNet shall not be required to have 2 or more POIs to interconnect to end offices subtending a single tandem, even if the end offices are within different LATAs (§29.1.1.1)	FL $0.00425/mou IN $0.00425/mou KS $0.00425/mou MN $0.00425/mou MO $0.00425/mou NE $0.00425/mou NJ $0.00425/mou NC $0.00425/mou OH $0.00425/mou OR $0.00425/mou PA $0.00425/mou SC $0.00425/mou TN $0.00425/mou TX $0.00425/mou VA $0.00425/mou WA $0.00425/mou (Attachment 1)	95% (§30.2)	100% (§30.1)

PARTIES TO AGREEMENT	DATE OF AGREEMENT	TERM OF AGREEMENT	STATES COVERED	EXECUTED PURSUANT TO	COVERAGE OF TYPE 1/ TYPE 2 ARRANGEMENTS	REQUIRED POINTS OF CONNECTION	TERMINATION COMPENSATION RATES PAID TO PAGING CARRIER	PERCENT OF TRAFFIC WHICH IS SUBJECT TO TERMINATION COMPENSATION PAYMENTS	PERCENT OF TRAFFIC SUBJECT TO RELIEF FROM FACILITIES CHARGES
BellSouth and AirTouch Paging	May, 1999	2 years from effective date (§III)	Alabama Florida Georgia Kentucky Louisiana Mississippi North Carolina South Carolina Tennessee	47 U.S.C. §§ 251, 252	Type 1 and Type 2 (§V. A, B)	Connectivity shall be established at at least one BellSouth access tandem within every LATA AirTouch desires to serve, or AirTouch can elect to interconnect directly at an end office (§V. B) Parties agree that current interconnections are efficient (§V. H)	Alabama Type 1 $.004709/mou Type 2A $.004709/mou Type 2B $.0017/mou Florida Type 1 $.003776/mou Type 2A $.003776/mou Type 2B $.002/mou Georgia Type 1 $.004513/mou Type 2A $.004513/mou Type 2B $.00160/mou Kentucky Type 1 $.005273/mou Type 2A $.005273/mou Type 2B $.002562/mou	87%, unless and until parties develop an auditable PLU (percentage of local usage) factor (§V. E)	87% (§V.B)
Ameritech and AirTouch Paging	May, 1999	May, 2001	Ohio Illinois Indiana Michigan Wisconsin	47 U.S.C. §§ 251, 252	Type 1 and Type 2 (based on content), but Type 1 to be phased out (§6.1)	For land to mobile traffic, a single POI in each LATA. For mobile to land traffic, must deliver traffic to each Ameritech tandem (§3.2.3) Parties agree that present interconnections are efficient (§3.2.3)	Base agreement provides for $.002 per minute of use, unless otherwise agreed (§7.1); limited payment for Type 1 traffic (§6.1). Concurrent amendment provides for the following rates (§7.3) IL $0.0053/mou IN $0.0057/mou OH $0.0059/mou MI $0.0051/mou WI $0.0053/mou	90% in Ohio, Illinois, Indiana and Wisconsin; 95% in Michigan (§7.3, as amended)	90% (§7.3, as amended)

PARTIES TO AGREEMENT	DATE OF AGREEMENT	TERM OF AGREEMENT	STATES COVERED	EXECUTED PURSUANT TO	COVERAGE OF TYPE 1/ TYPE 2 ARRANGEMENTS	REQUIRED POINTS OF CONNECTION	TERMINATION COMPENSATION RATES PAID TO PAGING CARRIER	PERCENT OF TRAFFIC WHICH IS SUBJECT TO TERMINATION COMPENSATION PAYMENTS	PERCENT OF TRAFFIC SUBJECT TO RELIEF FROM FACILITIES CHARGES
Bell Atlantic and Metrocall	May, 1999	from effective date until December 1, 2000	Massachusetts New Hampshire New York Rhode Island Vermont (agreements covering remaining Bell Atlantic states have not yet been filed with state commissions)	47 U.S.C. §§ 251, 252, 332	Type 1 and Type 2 (§3.1)	Interconnection can be at an end office, tandem, other specified point (§3.1.2)	Identical to rates in agreement between Bell Atlantic and PageNet where Metrocall's POIs are within 25 miles of Bell Atlantic's end office. Otherwise, a reduction of the PageNet rate by $.001/mou. (§3.1.4, as amended by Bell Atlantic and Metrocall)	Agreement provides that Metrocall will be paid for the termination of Local Traffic on its network. (§4.6.3)	85% from effective date until 90 days, thereafter, 90% from the 91st day until a percentage based on results of a study can be implemented (§4.5.3)
US WEST Communications, Inc. and AirTouch Paging	July, 1999	2 years and 3 months after date of execution (§11.2)	Washington	47 U.S.C. § 252	Type 1 and Type 2 (§2.1)	POI locations are negotiated on an ad hoc basis; AirTouch can identify POIs anywhere within the LATA. (§2.6.4)	$.00169 per minute of use (Appendix A, III.)	80% (Appendix A, I.A, III)	80% of facilities charges to the POI, subject to a billing demarcation point at (1) 60 miles for Type 1 interconnections, and (2) for Type 2 interconnections, at the US West wire center closest to the boundary on the route to AirTouch's designated POI where that POI is outside of the geographic area served by US West's local or toll tandems. (Appendix A, I.A., II)

PARTIES TO AGREEMENT	DATE OF AGREEMENT	TERM OF AGREEMENT	STATES COVERED	EXECUTED PURSUANT TO	COVERAGE OF TYPE 1 / TYPE 2 ARRANGEMENTS	REQUIRED POINTS OF CONNECTION	TERMINATION COMPENSATION RATES PAID TO PAGING CARRIER	PERCENT OF TRAFFIC WHICH IS SUBJECT TO TERMINATION COMPENSATION PAYMENT	PERCENT OF TRAFFIC SUBJECT TO RELIEF FROM FACILITIES CHARGE
US WEST and AirTouch Paging	October 1999	2 years and 3 months after date of execution	Minnesota Iowa Oregon Utah Nebraska New Mexico Arizona Colorado	47 U.S.C. § 252	Type 1 and Type 2 (§2.1)	Existing POIs deemed efficient (§2.6.4.1). Additional POIs may be established subject to possible charge for facilities longer than 37.5 miles	IA - $.003237/MOU OR - $.00133/MOU AZ - $.0028/MOU UT - $.003349/MOU NB- Type 1 .001/MOU Type 2 .003082 NM - Type 1 .001/MOU Type 2 .002914/MOU MN - Type 1 .001/MOU CO - $.00283	IA - 73.9% OR - 68.55% AZ - 78.9% UT - 82.9% NB - 77.2% NM - 86.3% MN - 77.3% CO - 73.8%	Same percentage as prior columns. Paging carrier pays TELRIC rates for portion of facilities within 37.5 miles and tariffed rates for portion of facility outside of 37.5 miles.
Verizon Wireless Messaging Services and Southwestern Bell	September 2000 (except for California which was May 1999)	2 years and 3 months after date of execution (§ 44)	Nevada Texas Missouri Kansas Connecticut California	47 U.S.C. § 251, 252 and 336	Type 1 and Type 2A and Type 2B	At least one POI in each LATA. (§ 5.13). Existing POIs deemed efficient based upon the following average length of facilities: CT-30 miles; KS-10 miles; MO-10 miles; NV-20 miles; TX-15 miles. (§ 5.1.3).	For Type 1 or Type 2A $.005 per MOU For Type 2B MO-$.003 KS - $.002363 TX - $.000947 NV - $.006 CN - $.0009 CA - $.00174	CT - 91% KS - 83% MO - 90% NV - 83% TX - 84% CA - 83%	100% provided facility mileage averages are less than or equal to the averages when the arrangement was entered into.

Prepared by Bob Atkinson

CITI INTERCONNECTION PRICING WORKSHOP

SOME POSSIBLE "PRINCIPLES" FOR DISCUSSION

- Comply with the law
- Competitive neutrality
  - Does not significantly advantage or disadvantage any industry sector
- Technical neutrality
  - Does not significantly advantage or disadvantage any particular technology or means of providing service
- Market neutrality
  - Does not significantly advantage or disadvantage any particular geographic area, category of customer, demographic classification, etc.
- Maximize efficiency
  - Efficient use by users
  - Efficient investment and network deployment by providers
- Improve network reliability, disaster-resistance
- Encourage market competition
- Encourage innovative retail pricing (particularly for residential, small business)
  - Minimize influence of interconnection arrangements on retail rate levels/rate structure
- Encourage administrative simplicity, low administrative costs
- Minimize conflicts, controversy and regulatory involvement
  - Encourage negotiated interconnection arrangements
- Mimic, as far as possible, arrangements that are likely to prevail in a fully competitive market
- Separate/isolate interconnection policy goals from other public policy goals

COBAK Interconnection

Patrick DeGraba*

December 13, 2000

*Charles River Associates

Formerly Deputy Chief Economist, FCC

These are the opinions of the author
and do not necessarily reflect the opinions
of the Commission, CRA, or any of its clients.

Purpose

- **To design a unified regime for all wire line interconnection that eliminates the problems of the current system**
  - Eliminate Regulatory Arbitrage
    - ISP reciprocal compensation problem
    - VOIP Access charge arbitrage
  - Eliminate terminating access monopoly
    - CLEC access charges
  - Minimize need for regulatory decision making
    - No need to determine termination costs of each network
  - Eliminate pressure on retail rates
    - Per minute I.C. could cause per minute Internet rates

Current Interconnection Regime

- **Local Calls**
  - Calling party's network pays transport and termination charges to called party's network
- **Long Distance Calls**
  - IXC pays per minute charges for both originating and terminating access
- **Dial Up Internet Calls**
  - ESP exemption — ISPs pay no access charges

Current Interconnection Regime Fundamental Flaws

- **Prices services instead of facilities**
  - Interstate cost recovery is per minute while local cost recovery typically flat rated. Creates arbitrage opportunities.
  - Requires regulatory intervention
  - Inefficient retail rates
- **Calling Party Network Pays (CPNP)**
  - Terminating access monopoly
  - ISP reciprocal compensation problem
  - Inefficient retail rates

Central Office Bill and Keep (COBAK)

- **Networks have two pieces**
  - Local access
    - Loops — premise to the end office
    - Central offices — switches traffic to transport
  - Transport
    - Trunks and tandems connecting central offices
- **Termination — called party's C.O. and Loop**
- **Transport — facilities that connect C.O.s**

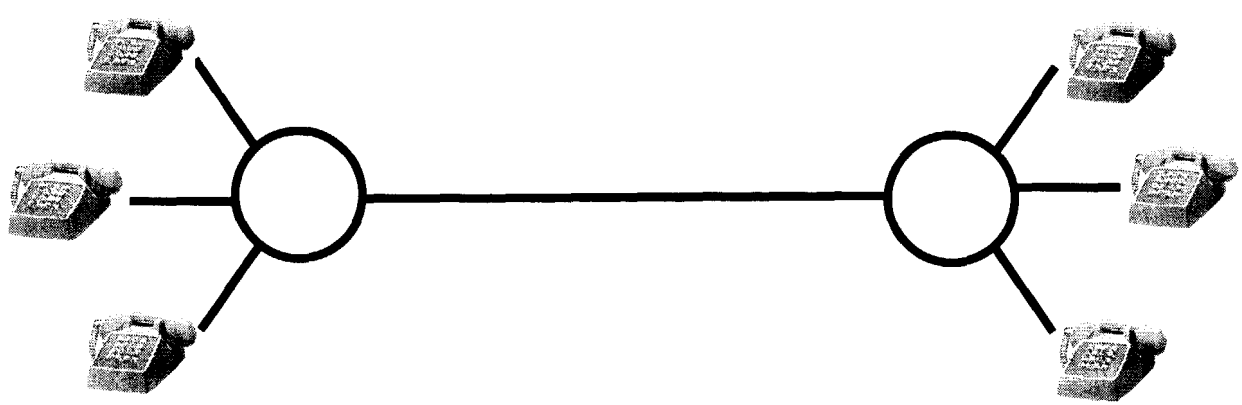

Central Office Bill and Keep (COBAK)

- COBAK is a default interconnection regime, to be implemented if carriers cannot reach negotiated solution

- Expectation is that carriers will negotiate efficient interconnection arrangements against the COBAK default

Central Office Bill and Keep (COBAK)

- **Two Rules for interconnection of networks**
  - No termination charges for loops and CO's
    - End users completely responsible for these costs
  - Calling party's network responsible for transport to the called party's C.O.

Central Office Bill and Keep (COBAK)

- **Extension to three network calls**
  - Where the called party has a retail relationship with two networks, the first network incurs the cost of transport to the interconnection point with the second
  - The second network incurs transport cost to the C.O. of the called party
  - Each recovers its costs from its end users

Implementation of COBAK

- **Local**
  - Calling party's LEC covers all costs to called party's C.O.
  - Called party's LEC covers cost of subscriber's loop and C.O.
- **Inter-exchange**
  - Calling party's LEC covers all cost to IXC's POP
  - IXC covers subsequent costs to called party's C.O.
  - Called party's LEC covers cost of subscriber's loop and C.O.

COBAK Implementation

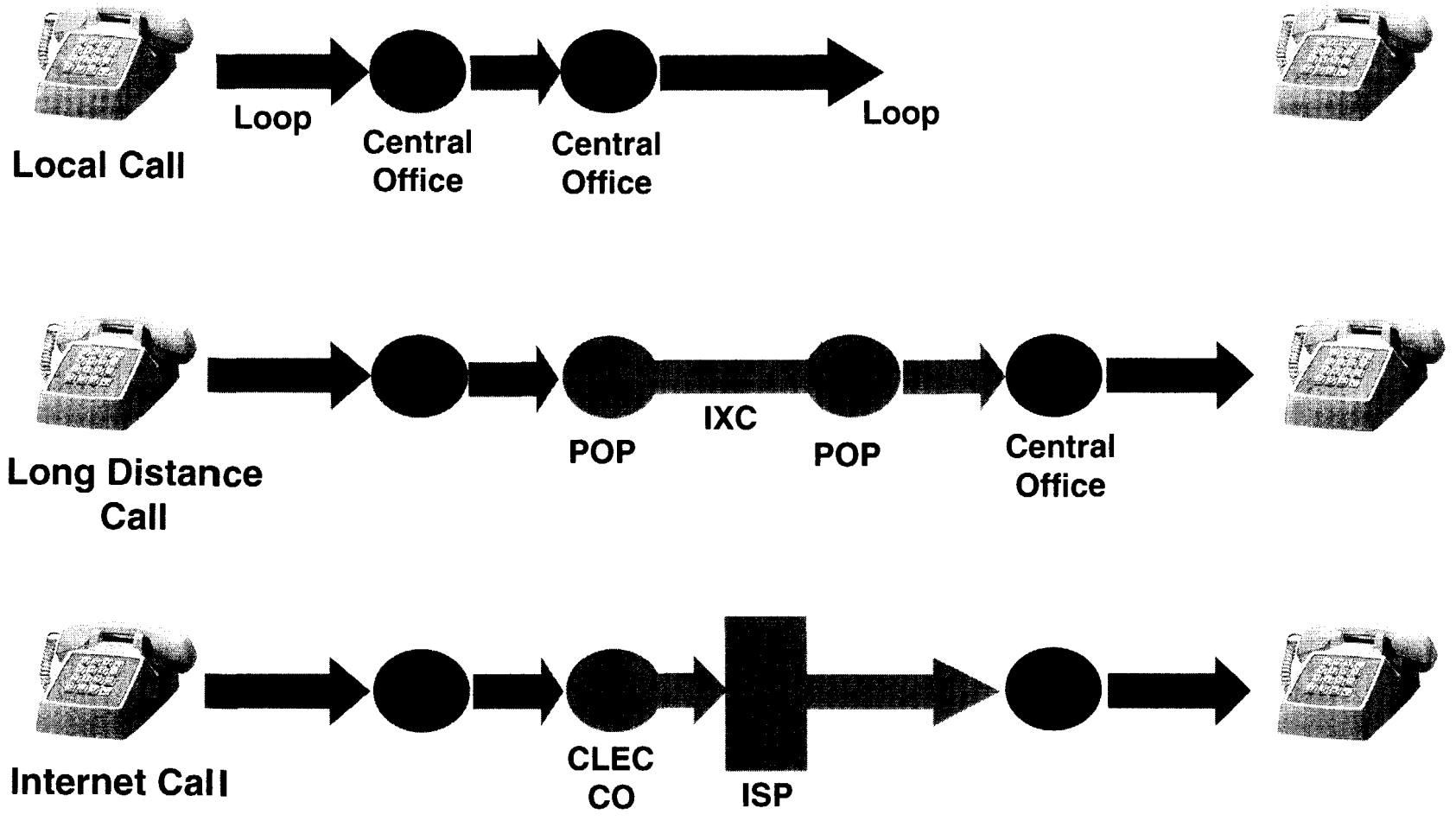

Implementation of COBAK

- **Defining interconnection points**
  - Identifying central offices
    - Between equivalent carriers
    - Between LECs and IXCs
  - Remotely located central offices
  - Unwanted calls
  - Cost recovery

Comparison of COBAK and CPNP

- **Eliminate IXC/ISP arbitrage problem**
  - IXC's pay access charges of two cents per minute
  - ISPs are exempt from access charges
  - When IP telephony works, ISP's will have a cost advantage

Comparison of COBAK and CPNP

- **Eliminate ISP reciprocal compensation problem**
  - There is no termination charge so there are no net payments between networks with unbalanced traffic

Comparison of COBAK and CPNP

- **Eliminate terminating access monopoly**
  - If a carrier must terminate a call on another network
    - In the absence of regulation there are incentives for that network to charge a high price, which will be reflected in retail rates
    - Such networks have an incentive to choose a technology that is highly traffic sensitive, to increase regulator set termination rates

Comparision of COBAK and CPNP

- **More efficient end user prices**
  - Eliminates artificial per minute rates
  - If callers share equally in the benefit of a call, then the retail rates should have them share equally in the cost. In general COBAK divides costs more equally across customers than CPNP, which will be more efficient.

COBAK: Philosophy

- **CPNP**
  - The calling party is the only cost causer and receives all of the benefit from a call
  - Calling party's carrier sells "completed calls" and must purchase "inputs" from other involved network
- **COBAK**
  - Calling party and called party share equally the benefit of a call
  - Each party is responsible for purchasing some of the facilities needed to complete a call

COBAK: Philosophy

- **Service Pricing**
  - Different uses of the same facilities have different prices
  - Regulators must differentiate among services
- **COBAK**
  - Price is based only on what facilities are used

Rationale for Rules

- **End users pays for entire loop and CO**
  - Competitive market (where it exists) determines the price
  - Eliminates “terminating access monopoly problem”
  - Calling and called party share the cost of the call

Rationale for Rules

- **Originating network bears all transport costs**
  - Eliminates free rider problem (as will other solutions)
  - Freedom to route and design entire transport network
  - Actually is a default
  - No “dumping” of unwanted traffic on competitor’s networks