> of 72 million anonymous profiles and 9.5 million e-mail profiles as well as its rich media capabilities to help advertisers maximize returns through precision placement of interactive advertisements and through targeted e-mail campaigns. MatchLogic served over 15 billion Internet advertising impressions and delivered over 50 million targeted e-mails during the fourth quarter of 1999. As a result of these capabilities, we believe we are a leader in the industry in revenue efficiency measures such as revenue per page view and revenue per reach point. We intend to maintain our leadership position by continuing to build our databases and by offering new tools that are designed to address advertisers' desire for highly targeted marketing. Our base of 1.1 million broadband customers also enables us to offer advertisers access to a unique audience capable of viewing eye-catching, highly interactive advertisements.[32]

@Home's efforts to collect usage statistics go beyond tuning performance or designing custom advertising. Milo Medin, @Home's chief technology officer provided details of the usage tracking strategy and capability in a recent interview:

> The company not only tracks how much traffic is going and coming into a specific household, but it also tracks where the traffic goes once it leaves the home and what kind of data is being sent and received, he (Mr. Medin) said. Don Hutchinson, senior vice president of the company's @Work division, said Excite@Home tracks a customer's data destination in order to pinpoint where it might need to better improve connections to its backbone. In addition, the company said, monitoring individual usage helps the company upgrade its services. . .[33]

The ability to identify and track user destinations and data has further usefulness to the ISP. Cisco Systems, a developer of technology that allows this level of network control, touts other applications of the tracking capability, such as the ability to:

> [S]pecify that video coming from internal servers receives precedence and broader bandwidth over video sourced from external servers.[34]
>
> [P]rioritize according to network protocol, incoming interface, packet size, source or destination address.[35]

Additionally, the network can:

> [R]estrict the incoming push broadcasts as well as subscriber's outgoing access to the push information site to discourage its use. At the same time, you could promote and offer your own or partner's services with full-speed features to encourage adoption of your services, while increasing network efficiency.[36]

---

[32] @Home 199910K. Available at: http://www.sec.gov/Archives/edgar/data/1020620/0001012870-00-002429.txt . Accessed December 4, 2000.

[33] Bannan, Karen J. "Excite@Home: Protection or Invasion?" *ZDNet Interactive Week Online*, June 21, 1999. Accessed on December 4, 2000 at: http://www.zdnet.com/intweek/stories/news/0,4164,2279510,00.html

[34] Cisco Systems, *Controlling Your Network–A Must for Cable Operators* (1999), page 5.

[35] Cisco Systems, *Controlling Your Network–A Must for Cable Operators* (1999), page 6.

[36] Cisco Systems, *Controlling Your Network–A Must for Cable Operators* (1999), page 5, emphasis added.

The potential exists for users to have high-bandwidth connections when accessing the "proper" content–i.e., that provided by the ISP affiliate, and low bandwidth when the user strays from the "parallel Internet" onto the Internet proper. It should be noted that the capabilities of this technology are available to all ISPs,[37] and many ISPs may choose not to use this technology to limit customer choice and favor its own e-commerce and content partners and affiliates. However, a closed access environment creates the highest potential for these discriminatory practices. In an open access environment, ISPs will have to compete on customer service issues. An ISP who prevents customers from reaching the content or e-commerce sites of their choice would likely face competitive pressure to do so. An ISP that degrades access to non-preferred web sites would likely find its rivals boasting that they offer nondiscriminatory cache that allows their customers to reach the variety of content and e-commerce providers that they desire.

With AT&T's @Home and Time-Warner's RoadRunner, the significance of this issue is compounded by the bundling of the monopoly broadband access link with the ISP services. The AT&T and AOL Time-Warner business strategies have the potential to distort the current end-to-end openness of the Internet. The "parallel Internet" model pursued by the cable companies is an attack on the basic Internet model and has the potential to change the Internet from a highly competitive and innovative platform to a closed system that discourages competition and innovation.

Absent regulation, ISP behavior can only be limited by the customer's ability to fire their ISP and choose a new one. Customer choice of ISP has been a critical factor in promoting innovation in the ISP market and improving customer service. Promoting customer choice in the emerging broadband world is a valuable policy objective as it is the mechanism that can provide discipline to ISPs in their actions with respect to linking content and e-commerce with ISP services. Customer choice is promoted by open access.

[37] This issue has recently come under scrutiny by the Senate Judiciary Subcommittee on Antitrust, Business Rights, and Competition. See, "Senate Antitrust Panel Leaders Worried ISPs Can Use Routers, Caching to Favor Affiliates," *Telecommunications Reports, TR Daily*, May 10, 2000.

IV. Is There a Policy Basis for Cable Open Access?

Existing Policy and Cable Internet Access

From a legal standpoint, television programming provided by a cable operator is not a telecommunications service, but is instead classified as a cable service. The question arises whether Internet access facilities provided by cable companies are also cable services. If they are not cable services, how will they be classified? Federal policy has categorized data communications services as "telecommunications" or "information" services, with varying levels of regulation, depending on the company providing the service. Appendix B provides a background discussion of U.S. policy toward data communications services. We will now turn to the first question, whether Internet access facilities provided by cable companies can be classified as cable services.

The initial definition of cable services provided by Congress in the 1984 Cable Act is "(A) the one-way transmission to subscribers of (i) video programming, or (ii) other programming service, and (B) subscriber interaction, if any, which is required for the selection of such video programming or other programming service."[38] "Video programming" was defined as "programming provided by, or generally considered comparable to programming provided by, a television broadcast station."[39] "Other programming service" was defined as "information that a cable operator makes available to all subscribers generally."[40] While the 1984 Cable Act was passed before the emergence of the Internet in mainstream society, information services were understood to be outside the scope of the definition of cable services. The legislative history of the Committee on Energy and Commerce's Report on the 1984 Cable Act was clear on this point:

> All services offered by a cable system that go beyond providing generally-available video programming or other programming services are not cable services. For instance, a cable service may not include "active" information services such as at-home shopping and banking that allow transactions between subscribers and cable operators or third-parties... In general, services providing subscribers with the capacity to engage in transactions or to store, transform, forward, manipulate, or otherwise process information or data would not be cable services.[41]

Interestingly, especially in light of the development of the World Wide Web and the use of portals such as those provided by Excite@Home, AT&T's ISP affiliate, special emphasis on the interaction that could classify as a cable service is given special emphasis in this report:

> ... By contrast, interaction that would enable a particular subscriber to engage in the offpremises creation and retrieval of a category of information would not fall under the definition of cable service. This definition of interaction is necessary in order to ensure that providing subscribers with the capacity to retrieve information–capacity which may be part of cable service–does not also provide subscribe[r]s with the capacity to engage in off-premises data processing–an additional capacity which may not be offered as part of cable service.

---

[38] 47 U.S.C. §522(6) (1984).

[39] 47 U.S.C. §522(20)

[40] 47 U.S.C. §522(14)

[41] Cable Franchise Policy and Communications Act of 1984, Report 98-934, 98th Congress, 2d Session. Committee on Energy and Commerce, August 1, 1984, p. 42.

> This definition of interaction mean[s], for example, that unlimited keyword searches of information stored in data bases is not permitted in a cable service...[42]

Thus, a cable service would not include search engine capabilities. Also the legislative history indicates that electronic mail, home shopping, home banking, and "one-way and two-way transmission [of] non-video data and information not offered to all subscribers, data processing, video conferencing, and all voice communications" would *not* be treated as cable services.[43]

If this were the extent of legislation regarding cable services, it would appear that interactive services provided over cable facilities, such as Internet services, would not be treated as cable services. The interpretation is complicated slightly by a revision to the Cable Act included in the Telecommunications Act of 1996 that redefined cable services as: (A) the one-way transmission to subscribers of (i) video programming, or (ii) other programming service, and (B) subscriber interaction, if any, which is required for the selection or use of such video programming or other programming service.[44] According to the Conference Report, the addition of the phrase "or use" to the definition of cable service was made:

> ... to reflect the evolution of cable to include interactive services such as game channels and information services made available to subscribers by the cable operator, as well as enhanced services. This amendment is not intended to affect Federal or State regulation of telecommunications service offered through cable system facilities, or to cause dial-up access to information services over telephone lines to be classified as a cable service.[45]

This discussion might lend some strength to arguments that the scope of cable services was expanded by the Telecommunications Act of 1996. However, the words "or use" still modify video programming or other programming service. The Act does not modify the definitions of these terms from their status in the 1984 Cable Act. Furthermore, the Conference Report indicates that the addition of the two words was not intended to "affect Federal or State regulation of telecommunications service offered through cable system facilities," which would indicate that the provision of Internet services over cable facilities would retain the potential to be classified as a non-cable service. Thus, the "or use" addition does not provide a foundation for an extension of cable services to include Internet services.

Information or Telecommunications Services?

If Internet services provided over cable television facilities are not cable, are they information services or telecommunications services? The answer is obvious if open access to a cable company's Internet access facilities is assumed. If an unaffiliated ISP provides Internet services over cable plant, it must utilize the cable company's *transmission facilities*, i.e., its Internet access facilities. The provision of Internet services over cable requires both the transmission facilities owned by the

---

[42] Cable Franchise Policy and Communications Act of 1984, Report 98-934, 98th Congress, 2d Session. Committee on Energy and Commerce, August 1, 1984, p. 43.

[43] Cable Franchise Policy and Communications Act of 1984, Report 98-934, 98th Congress, 2d Session. Committee on Energy and Commerce, August 1, 1984, p. 44.

[44] 47 U.S.C. §522(B), emphasis added.

[45] "Joint Explanatory Statement of the Committee of Conference," Telecommunications Act of 1996. Referenced from Huber, Kellog, and Thorne, *The Telecommunications Act of 1996*, p. 358.

cable company and the Internet services provided by the ISP. This is exactly the same technical relationship that exists with a local telephone company's provision of DSL or dial-up Internet access–transmission to the ISP is a separate service than the Internet service provided by the ISP. The closed access environment masks the fact that a cable company provides a transmission facility to *itself* when using its affiliated ISP. Thus, the cable-company-provided Internet access facility is a telecommunications service and the Internet service is an information service.

The FCC in its *amicus* brief filed in the City of Portland[46] case stated:

> A number of parties have argued that Internet access services "are information services or telecommunications services covered by Title II" of the Communications Act. Currently, when Internet access service is provided over telecommunications facilities, the Commission treats that service as an information service. If the same type of Internet access service is offered over cable systems as well as telephone networks, it is not readily apparent why the classification of the service should vary with the facilities used to provide the service.[47]

This statement by the FCC, while clearly steering away from an interpretation of cable company Internet access facilities as cable services, seems to ignore the fact that a cable company provides both an Internet access facility and information services (the Internet services). The FCC classifies Internet services provided over telecommunications facilities as an information service, but it also treats Internet access facilities as a *telecommunications service* when the facilities are provided by a telecommunication provider, especially local telephone companies. Further, the FCC's Line Sharing Order (see below) identifies the high-frequency portion of telephone company loop plant as a telecommunications service, subjecting it to the unbundling requirements of the Telecommunications Act of 1996. Thus, recognition of the distinction between a cable company's provision of Internet services and Internet access facilities leads to the conclusion that cable companies do provide a telecommunications service over their networks. Classification of cable Internet access facilities as a telecommunications service is the first step necessary to establish a policy framework that will allow cable open access to begin.

Ninth Circuit's Ruling in the City of Portland Case

AT&T, with its purchases of TCI and MediaOne, became the largest cable operator in the U.S., controlling over 40% of the market.[48] As AT&T sought to transfer the cable licenses, some local cable franchising authorities imposed open access requirements as a condition of the franchise transfer agreements. These open access requirements were challenged in higher courts. Last year, the U.S. Court of Appeals for the 9th Circuit held that the local cable franchising authority in Portland, Oregon could not require AT&T to provide non-discriminatory access to its cable broadband network.[49] Their ruling, however, provides an important legal foundation for cable open access, and

---

[46] As is discussed further below, the City of Portland case arose due to a local cable franchising authority attempting to require AT&T to provide open access.

[47] AT&T Corp., Telecommunications Inc., TCI Cablevision of Oregon, Inc, and TCI of Southern Washington, Appellants, v. city of Portland, et al., Appellees. U.S. Court of Appeals for the Ninth Circuit, *Amicus Curiae* Brief of the Federal Communications Commission, citations omitted.

[48] Associated Press. "U.S. clears deal making AT&T largest cable operator." June 6, 2000. Accessed December 4, 2000 at: http://www.freedomforum.org/news/2000/06/2000-06-06-09.asp . AT&T's status as the largest cable operator will not be changed by the planned voluntary divestiture of AT&T.

[49] AT&T v. City of Portland, 216 F.3d 871 (9th Cir. 2000).

also provides a strong impetus for the FCC to make the decision on whether broadband open access will be required for cable companies. The 9th Circuit recognized that the critical issue in the City of Portland case is the nature of the cable Internet access facilities and concluded that cable Internet access facilities are not cable services, but are telecommunications services.[50] Classification of cable broadband Internet access facilities as a telecommunications service provides the needed foundation for open access and the benefits of competition.

Cable Operators as Local Exchange Carriers

The motivation for cable operators to upgrade their systems comes from the broad set of services, including telephone services, that can be offered over the hybrid fiber-coaxial networks.[51] Offering telephone services over cable plant is particularly attractive to AT&T, which is also a long distance telephone service provider. By providing voice telephony, AT&T, and other cable companies that also provide long distance calling, can avoid the access charges that are paid to local telephone companies for the origination and termination of long distance calls. These access charges are the largest single cost of doing business for a long distance company.

In order to offer a full menu of telephone services, cable operators must obtain regulatory permission from state public utility commissions to provide local exchange service. Once established as a local exchange carrier, the cable company has the right to request interconnection with the incumbent local telephone company's network so that its customers can make and receive calls within the local calling area. In addition to this right, the cable operator as a local exchange carrier has "the duty not to prohibit, and not to impose unreasonable or discriminatory conditions or limitations on, the resale of its telecommunications services."[52] This provision of the law has implications for the cable open access issue. Cable operators, to the extent that they are also local exchange carriers, have a legal requirement to resell their telecommunications services. If cable Internet access facilities are classified as telecommunications services, then any cable operator that is also a local exchange carrier would be obligated to not unreasonably prevent the resale of these services. This requirement would provide open access for ISPs (or other companies) to the broadband portion of the cable operator's plant. The 9th Circuit's classification of cable modem Internet access facilities as telecommunications services would appear to pave the way for this resale.

The FCC's Line Sharing Order

The FCC recently gave a boost to the deployment of broadband Internet access facilities by requiring that local telephone companies unbundle the high-frequency portion of the local loop that can be provided with Digital Subscriber Line (DSL) services.[53] Under the FCC's Line Sharing Order, the physical access channel (the telephone company's twisted pair of copper wires) can be shared by two separate companies which provide two separate sets of services. The incumbent telephone

---

[50] Id. at 878.

[51] See, Abe, George. *Residential Broadband*, chapter 1. See also, Cisco Systems, "A Business Case for Two-Way Service Deployment over HFC Networks." Access June 6, 2000 at: http://www.cisco.com/cable/solutions/cable_op_bus_rsrc.html

[52] Communications Act of 1934, Section 251(b)(1).

[53] *In the Matters of Deployment of Wireline Services Offering Advanced Telecommunications Capability and Implementation of the Local Competition Provisions of the Telecommunications Act of 1996.* CC Docket Nos. 98-147 and 96-98. FCC 99-355. December 9, 1999. (The, "Line Sharing Order.")

company will continue to provide the full range of voice services, while other companies can provide high-speed Internet access facilities. This strategy for telephone company broadband plant is a policy parallel for the cable broadband issue. The FCC has mandated open access to bandwidth on the broadband access portion of the telephone company network. Cable open access requires similar action. The FCC's line sharing policy promotes the deployment of broadband technology, and is clearly consistent with the ideas of open access.

Benefits of a Consistent Open Access Policy

Current broadband deployment in the U.S. is occurring using two competing technologies,[54] cable modems and digital subscriber lines, and two competing regulatory models. Digital subscriber line customers can gain high-speed access with the ISP of their choice. Cable customers have limited choice because the cable Internet access technology is being deployed on a closed access basis. Classification of cable Internet access facilities as telecommunications services will allow open access principles to be consistently applied across technologies. This leveling of the regulatory playing field will provide benefits for end-users, ISPs, content and e-commerce providers, and technological innovation. Consumers will benefit due to the ability to choose which ISP best meets their needs. ISPs will benefit by being able to offer Internet services over all varieties of access technology, both narrowband and broadband. Content and e-commerce providers will be able to deliver their services without having to confront a broadband access gatekeeper that may also compete in the provision of content and e-commerce activities. Technological innovation is promoted by fostering the openness of the Internet platform. Internet application developers can build upon an open broadband platform, bringing future generations of applications to end-users. Based on free choice, these end-users will determine the success or failure of such applications.

[54] As is discussed further in Appendix A, other broadband technologies, such as fixed wireless, are also on the horizon. However, cable and DSL appear to be the likely contenders in the near term. Even if other technologies successfully emerge, its status with regard to open access will also need to be determined.

V. Issues with the Regulation of Broadband Access

The caution with which the FCC has proceeded regarding the cable open access issue reflects the political philosophy that regulation should always take a back seat to market forces. However, a mandate of cable open access now might prevent larger regulatory interventions in the long run.

Doesn't regulation always cause more problems than solutions?

Telecommunications regulators in the U.S. have been accused of slowing the pace of competition in certain markets and employing practices that led to social inefficiency.[55] On the other hand, entrenched monopoly markets have been opened with the help of regulation, with nascent competitors gaining needed protection from powerful incumbents. Economic efficiency has also benefitted from the opening of incumbent networks to competitors, eliminating the need for duplication of facilities.

In any discussion of regulation of market prices or practices, one needs to be mindful that regulation of industry in the United States is not solely the domain of government agencies like the FCC and state public utility commissions, which have taken an activist role in promoting competition in telecommunications markets in recent years. Antitrust laws also apply. The current antitrust action against Microsoft provides a valuable lesson. Actions which came under Department of Justice scrutiny in the Microsoft case are similar to emerging issues associated with cable open access and the Internet. According to the Findings of Fact in the Microsoft antitrust case, Microsoft utilized its monopoly position with its operating system to leverage its power into other markets, especially with the web browser.[56] Similarly, a cable company's control of monopoly broadband access facilities may allow it to leverage into content delivery and e-commerce over the Internet in a manner that may harm competition in these markets. Microsoft's market power, growing without any regulatory checks, eventually led to the application of antitrust laws. The judge in the Microsoft case concluded that Microsoft should be broken into two companies. He also decided that the application programming interfaces, the monopoly element critical to Microsoft's success, should be provided on an open access basis and, furthermore, that prices for its operating system should be public information that is also uniformly available to all personal computer manufacturers.[57]

In telecommunication markets, the existence of regulatory agencies opens the possibility of a measured application of open access principles to cable Internet access facilities before problems similar to those associated with Microsoft emerge. As was discussed above, a critical economic reason for requiring open access is to mitigate the cable operator's (or any broadband Internet access facility provider's) ability to leverage its access market power into higher levels of the Internet. As such, classification of cable Internet access facilities as telecommunications services for regulatory purposes is the first logical step to preserve competition in the ISP market.

---

[55] See, for example, Faulhaber, Gerald R. *Telecommunications in Turmoil,* passim and Averch, H. and Johnson, L. "Behavior of the Firm under Regulatory Constraint," *American Economic Review,* vol. 52, Dec. 1962.

[56] U.S. v. Microsoft Corporation, Civil Action No. 98-1232 (TPJ), Findings of Fact, §V.

[57] See, *Final Judgement* in Civil Action No. 98-1232, §3(b) and §3(a)(ii).

Wouldn't regulation of cable access curb investment?[58]

The success of the Internet has been driven in part by competition among ISPs, which by differentiating themselves through service quality or specialized offerings, push technology into new markets and new market niches. By limiting customer choice, cable operators may be reducing adoption of their broadband technology.

Furthermore, cable operators upgrade their networks for reasons other than providing Internet services. The ability to offer voice services, which are expected to contribute significant revenue streams, also drives cable operators to upgrade their networks.[59] In addition to the provision of voice services, broadband technology allows cable operators to offer enhanced services, such as streaming media (which can be delivered to set top boxes as well as cable modems).[60]

In passing the Telecommunications Act of 1996, Congress recognized the importance of regulating the prices of monopoly inputs by establishing cost-based prices for unbundled network elements sold by competitors in the local exchange market. But, even if the FCC eventually decided that price regulation for cable Internet access facilities was necessary, it is unlikely that cable company investment would be adversely affected. In fact, the FCC brushed aside arguments that cost-based prices would hinder local exchange carriers' deployment of broadband facilities.

> We also reject the argument that applying TELRIC[61] principles to line sharing will reduce the incentives of incumbent LECs to develop advanced services. To the contrary, we find that the increased competitive pressures caused by the deployment of xDSL-based services by competitive LECs and cable modem service by cable companies should increase the incentive of incumbent LECs to invest in advanced services.[62]

These arguments are equally applicable regarding cable Internet access facilities.[63]

Isn't broadband competition just around the corner?

Regulation would not make sense if broadband competition were expected to rapidly emerge. Unfortunately, this is not a reasonable expectation. For the residential market, the primary technologies for broadband access over the coming years are DSL and cable Internet access service.[64] Additional competition may emerge with broadband fixed wireless and broadband low

---

[58] A detailed business case for cable open access is provided by Professor Jeffrey MacKie-Mason in "Investment in Cable Broadband Infrastructure: Open Access is Not an Obstacle." Accessed December 4, 2000 at: http://www-personal.umich.edu/~jmm/papers.html#broadband

[59] Cisco Systems. "A Business Case for Two-Way Service Deployment over HFC Networks." Accessed on December 4, 2000 at: http://www.cisco.com/cable/solutions/cable_op_bus_rsrc.html . See also, MacKie-Mason, J. Ibid.

[60] Cisco Systems. "Streaming Media Opportunity for Cable." Accessed December 4, 2000 at: http://www.cisco.com/cable/solutions/cable_op_tech.html . (Set top boxes are devices that enable the provision of interactive television services.)

[61] TELRIC (Total Element Long Run Incremental Cost) is the FCC's economic cost methodology.

[62] *Line Sharing Order,* op cit., ¶ 150.

[63] See Appendix C for an additional discussion of the impact of open access on cable company investment.

[64] Bar, Francois, et al, "Defending the Internet Revolution in the Broadband Era: When Doing Nothing is Doing Harm," E-conomy Working Paper 12, August, 1999. Accessed December 4, 2000 at: http://e-conomy.berkeley.edu/publications/wp/ewp12.html

earth orbiting satellite systems, such as Teledesic. However, as is discussed in Appendix A, fixed wireless systems are currently in trials. Furthermore, at this time Teledesic is still in the planning stages, with an anticipated service start date of 2005.[65]

Thus, it is likely that broadband Internet access facilities for the residential market will be provided by cable and DSL for the foreseeable future. In its recent study on the deployment of advanced telecommunications services, the FCC finds that market forces for broadband are starting to emerge in some areas. However, even in Los Angeles, an area that the FCC describes as "one of the most successful high-speed case studies in the nation," cable operators face broadband competition from DSL services alone.[66] In other areas of the country, the FCC points out that deployment is much more limited. For example, nationwide the FCC reports that 57.9% of zip codes in the U.S. have either no high speed data services available or service available from a single provider, and that 18.6% have two providers, with the remaining 23.5% having more than two providers.[67] However, the FCC includes satellite Internet access services in this count, which are not broadband by the FCC's own definition.[68] Furthermore, the FCC's methodology is optimistic as reporting by zip code does not account for the limited service availability for DSL based on loop length (see Appendix A). Within any zip code it is likely that a significant proportion of individuals would be outside of the 3-mile loop length needed for successful DSL provision.[69] As is indicated in the FCC's report, competition, when it does emerge, will most likely do so in the most lucrative markets first. As there is no guarantee that multiple providers would emerge in all segments of any given market, pockets of monopoly may persist in the long run. Consistent open access policy could provide benefits across the patchwork quilt of access technologies that are likely to be deployed in the coming years.

Won't bilateral deals solve the problem?

The recent acquisition of Time Warner by America Online (AOL) has also raised issues of whether private market forces will be sufficient to address the open access issue. AOL, an Internet and online service provider had, prior to the acquisition of Time Warner, been a vociferous advocate of cable open access. Comments filed by AOL in August of 1999 with respect to the AT&T MediaOne merger concluded that:

> Obliging AT&T to afford unaffiliated ISPs access on nondiscriminatory terms and conditions — so that they, in turn, may offer consumers a choice in broadband Internet access — would be narrow, easy to administer, and effective remedy. It would safeguard, rather than regulate,

[65] "About Teledesic." Accessed December 4, 2000 at: http://www.teledesic.com/about/about.htm

[66] Federal Communications Commission. "Deployment of Advanced Telecommunications Capability: Second Report." August 2000. See, case study for Los Angeles County.

[67] "High Speed Services for Internet Access: Subscribership as of June 30, 2000." Federal Communications Commission, Industry Analysis Division, October, 2000. Accessed December 4, 2000 at: http://www.fcc.gov/Bureaus/Common_Carrier/Reports/FCC-State_Link/recent.html

[68] FCC, op cit. Appendix B, Figure B.

[69] Cable operators are very concerned about overlap of their service territory with DSL service areas. This is evidenced by the recent activities of Time Warner Cable in Houston, where Time Warner offered its employees bonuses if they would request DSL service from SBC, and if the service was determined to be available, to then cancel the order. This strategy would allow Time Warner to identify specific areas where it faced competition from DSL. SBC faced costs in determining whether the lines were capable of providing DSL service, thus Time Warner was also imposing costs that its rival would never be able to recover. See, "An Oops in Time Warner's Battle for Internet," *New York Times*, May 24, 2000, page 1.

the Internet and the new communications marketplace. The openness it would afford is critical to a world in which–as boundaries are erased between communication services and applications–we ensure that consumers likewise are truly afforded choice without bounds.[70]

With the initial announcement of the acquisition of Time Warner, AOL appeared at first to back away from the open access position that it had previously held.[71] However, on February 29, 2000, AOL and Time Warner released a memorandum of understanding (MOU) regarding the open access issue.[72] The content of the AOL/Time Warner MOU provides examples of issues that might arise if market forces are allowed to regulate cable open access. Key provisions of the AOL/Time Warner MOU regarding relationships with competing ISPs include commitments to:

- Offer consumers a choice among multiple ISPs. Consumers will not be required to purchase service from an ISP that is affiliated with AOL/Time Warner in order to enjoy broadband Internet service over AOL/Time Warner cable systems.
- Negotiate arm's-length commercial agreements with both affiliated (such as AOL) and unaffiliated ISPs that wish to offer service on the AOL/Time Warner broadband cable systems.
- Not place any fixed limit on the number of ISPs with which it will enter into commercial arrangements to provide broadband service to consumers. AOL/Time Warner will provide its consumers with a broad choice among ISPs, consistent with providing a quality consumer experience and any technological limitations in providing multiple ISPs on its broadband cable systems.
- Not discriminate on the basis of whether the ISP is affiliated with AOL/Time Warner. Thus, while the economic arrangements reached by AOL/Time Warner and ISPs wishing to provide broadband service will vary depending on a number of factors (such as the speed, marketing commitments, and nature and tier of the service desired to be offered), AOL/Time Warner will not discriminate in those economic arrangements based upon whether or not the ISP is affiliated with AOL/Time Warner. In addition, AOL/Time Warner will operate its broadband cable systems in a manner that does not discriminate among ISP traffic based on affiliation with AOL/Time Warner.[73]

The provisions of the MOU raise some important questions that illustrate why the promises made by AOL/Time Warner, while acknowledging critical issues, do not, and most likely never will, provide a satisfactory solution to the open access problem.

AOL/Time Warner promises to enter into arm's-length agreements with competing ISPs and "not place any fixed limit on the number of ISPs with which it will enter into commercial arrangements."

---

[70] "Comments of America Online, Inc." In the Matter of Transfer of Control of FCC Licenses of MediaOne Group, Inc. to AT&T Corporation, CS Docket No. 99-251, August 23, 1999. AOL also supported the web site "No Gatekeepers," which provided an information clearinghouse for open access issues. See, http://www.nogatekeepers.org/about/ . Accessed December 4, 2000.

[71] "America Online Changes Tune in the Debate Over Cable Access," *Wall Street Journal,* Interactive Edition. February 14, 2000.

[72] Accessed December 4, 2000 at:
http://media.web.aol.com/media/press_view.cfm?release_num=25100399&title=AOL%20%26%20Time%20Warner%20Announce%20Framework%20for%20Agreements%20to%20Offer%20AOL%20Service%20%26%20Other%20ISPs%20on%20Time%20Warner%20Broadband%20Cable%20Systems

[73] AOL Time Warner MOU, ibid.

However, AOL/Time Warner will constrain the number of ISPs if "technological limitations in providing multiple ISPs on its broadband cable systems" arise. The MOU leaves unaddressed how the technical capabilities of the cable system would be established, or how disputes regarding whether an access arrangement was feasible would be resolved. Under the Telecommunications Act of 1996, incumbent local exchange carriers are not entrusted with decisions regarding the technical compatibility of networks. Rather, the law specifies that any actions that affect network inter-operability must be resolved through state public utility commissions. With respect to the cable access issue, without a specified mechanism to resolve technical disputes, competing ISPs would face difficulties in resolving technical problems.

Given the shared nature of cable broadband access facilities, there will always be the potential for one user's experience to be adversely affected by other users. Once again, the MOU does not specify who would have the authority to determine whether a "quality user experience" was being degraded. Absent a stated mechanism, the authority would reside with the cable operator. Whether the cable operator would act as a neutral arbitrator in this matter is highly doubtful.

The MOU indicates that AOL/Time Warner will not discriminate based on ISP affiliation with the parent company. However, the MOU identifies a number of areas where pricing differentials might exist, such as "speed, marketing commitments, and the nature and tier of the service desired to be offered." While charging different prices based on speed might seem to be innocuous (i.e., one would expect that higher bandwidth connections would cost more), combining this with marketing commitments raises some troubling possibilities. For example, the ISP affiliated with the cable company might have special relationships (including ownership) of content or e-commerce providers. On the cable company's affiliated ISP network these content or e-commerce providers might be given preferential cache or placement on the portal. The possibility of offering a non-affiliated ISP lower prices for bandwidth based on that ISP's willingness to offer similar preferential treatment for content or e-commerce providers would make the price discrimination issue much more complex than if AOL/Time Warner were only selling bandwidth.[74] ISPs who refused to promote the cable company affiliate's commercial partners might find themselves facing higher prices or inferior service. AOL's behavior with regard to its Instant Messaging service is instructive on this point. AOL's Instant Messaging service allows subscribers to identify other AOL users who are online and to communicate with them in real time. Other online service providers also developed instant messaging products and have attempted to link their subscribers to AOL's instant messaging subscribers. AOL has blocked other online service providers' equivalent instant messaging services from communicating with AOL customers.[75] In taking this action, AOL indicates that it is willing to respond to economic incentives that favor its network features at the expense of rivals. Similarly, contractual agreements between AOL and other content providers have required those firms to limit customer choice to AOL's advantage:

> Under one contractual provision, Disney's ABC News unit agreed in 1997 to deter users from leaving the AOL network by limiting or removing special highlighted connections called hyperlinks to other Web sites. If 25 percent or more of the traffic left AOL's offerings, AOL

[74] For a detailed discussion of a cable operator's expected pricing strategy when selling access inputs to rival ISPs, see Appendix C.

[75] "AOL's self-interest blocks communications on web." *USA Today*, June 1, 2000, Page 25A.

could cancel the contract. Disney, of Burbank, Calif., agreed to similar restrictions in online shopping agreements with AOL in 1998 and 1999.[76]

AOL/Time Warner is to be commended for offering the provisions contained in the MOU. It offers a preliminary framework that addresses many of the technical and market issues that will arise if multiple ISPs have access to the cable broadband plant. However, the MOU is not sufficient to limit anti-competitive practices. Furthermore, AOL/Time Warner's MOU only represents the commitments of this combined company. AT&T, the largest cable operator in the nation, has not made a detailed commitment to open access in the spirit of AOL/Time Warner's MOU. While AT&T has committed to open its cable networks to ISPs and portal providers other than Excite@Home,[77] it has also announced an increase in its ownership share of Excite@Home and a new six-year extension, until 2008, of its affiliation with Excite@Home as its ISP, with the provision that the new contract is not exclusive.[78] Without any commitment from AT&T beyond the nonexclusive nature of the contract with Excite@Home, any framework for open access is left undefined. AT&T's recent announcements that it will conduct open access trials in Colorado and Massachusetts have come under criticism precisely due to the lack of a framework. AT&T, rather than a neutral party, will supervise these trials, leaving the company fully in control of how the trials will unfold.[79] Market forces may play a role in the opening of broadband cable plant to multiple ISPs; however, it is possible that the limited progress that has emerged to date is the result of cable companies positioning themselves to forestall more extensive government regulation.[80]

---

[76] "AOL Restrictions Alleged; Contracts Said To Show Firm Limits Access To Rivals." Washington Post, October 10, 2000. Page E01.

[77] "AT&T Takes Control of Excite@Home." *Cable Datacom News,* April 2000. Retrieved June 1, 2000 at: http://www.cabledatacomnews.com/apr00/apr00-1.html

[78] Ibid.

[79] See, "'Open Access' Proponents Question Parameters of Planned AT&T Cable Modem Technical Trial" *Telecommunications Reports, TR Daily*, June 7, 2000. See also, "AT&T to Give Mass. Customers ISP Choice by 2002," *Telecommunications Reports, TR Daily,* June 27, 2000.

[80] "AT&T Seeks to Deflect Internet Criticism," *New York Times,* online edition, October 6, 1999.

VI. Conclusion

Broadband open access policy in the U.S. is at a juncture. By virtue of the 9th Circuit Court's ruling in the City of Portland case, the FCC must now decide whether it will abandon the open access path that it has been pursuing as it supervised the open access and higher levels of competition in monopoly telecommunications service markets. Of course, the technologies that provide Internet access facilities are constantly evolving and it may be the case that 10 years from now cable modem Internet access will be viewed as a dinosaur from Internet history. Likewise, the Internet itself will continue to evolve in directions that are difficult to imagine from this vantage point. However, the basic policy question will remain intact as technology evolves–should customers have the ability to choose how they will purchase Internet services, or will the providers of the physical telecommunications pathway to the Internet dictate to the public how they will consume Internet services?

The discussion provided in this report provides strong support, on an economic and policy basis, for the requirement of open access, regardless of the technology associated with the provision of Internet access facilities. The principles that govern the Internet and that have made the Internet such a success are founded on open access to network protocols and network technology. Recognition that the transmission facilities that allow consumers to connect to the Internet are telecommunications services, regardless of the technology employed, is the first step needed to provide a foundation for competition and customer choice. Legally, the 9th Circuit has provided this necessary foundation. The next needed step is action from the FCC. As discussed above, the FCC has taken an activist approach with regard to broadband open access for Internet access facilities sold by local exchange carriers. This is particularly evident with the bandwidth unbundling required by the FCC's Line Sharing Order. The FCC should apply its authority consistently and to apply open access requirements to cable Internet access facilities. Classification of these facilities as information services would not be a meaningful approach to the open access issue as information services are not subject to the same regulatory treatment as telecommunications services.[81] As the 9th Circuit noted, cable modem Internet access facilities are not an information service, as that term has been defined in law and applied by the FCC.[82]

FCC classification of cable Internet access facilities as telecommunications services and the requirement of open access would represent a judicious use of the FCC's regulatory authority. This exercise of the FCC's regulatory authority would have the important consequence of promoting competition in the market for Internet content and services and continuing to promote the free dissemination of technology that has been associated with the Internet. As is also discussed in Appendix C of this report, cable open access alone may not be enough to eliminate the controversy surrounding the issue. The prices, terms, and conditions associated with open access will need to be established. However, once cable open access is mandated, a higher degree of leverage will reside with independent ISPs. Bilateral negotiations may have a better chance of resulting in reasonable access prices. Exercise of the FCC's authority over cable Internet access facilities would also signal cable operators that they may face additional regulation if negotiation fails to provide reasonable results. The threat of additional regulation may lead cable operators to become more open during the negotiation process. However, if the process of negotiation proves insufficient in an open access

[81] Opinion, AT&T, et al v. City of Portland, et al. No 99-35609 D.C. No. CV-99-00065-OMP. United States Court of Appeals for the Ninth Circuit, §II(5).

[82] Ibid.

environment, additional steps should be pursued. Discrimination could be limited by the posting of terms and conditions. Ultimately, cost studies might be needed, as they are for a telephone company's unbundled network elements.

The FCC should recognize that limited action taken now may alleviate the need for more extreme measures in the future. The lessons of telecommunications policy in the U.S. over the past 40 years show that when monopoly power is present, judicious steps taken by regulators can encourage competition, with the benefits of innovation to follow. Taking the first step, regulatory classification of cable Internet access facilities as a telecommunications services and requiring open access, is judicious action at this time. Consistent open access policy for broadband Internet access facilities, regardless of the underlying technology, will untangle the current contradictions in national telecommunications policy.

Appendix A: Internet Access Facilities

Dial-up Internet Access Facilities (Analog)

With analog dial-up access, the Internet user connects a computer or other device (such as WebTV) to a modem. The modem is connected to the user's telephone line. When establishing an Internet connection, the user will dial the telephone number of the ISP and be connected through the telephone company's switching equipment to high capacity circuits that are then connected to the ISP's data network (see Diagram A1).

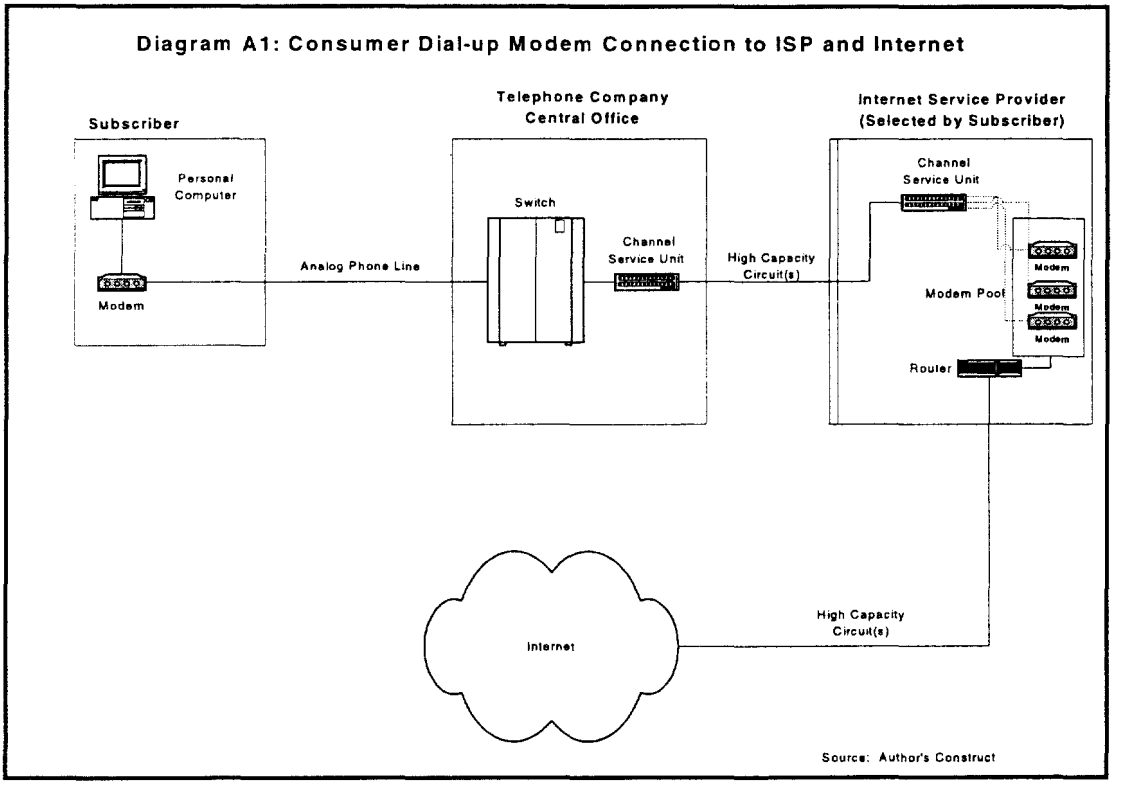

The bandwidth that this access arrangement will provide the user depends on the speed of the modem on either end of the connection. Dial-up modems today are capable of carrying data at a maximum speed or bit rate of 56 kilobits per second (kbps). Depending on the condition of the telephone company's lines, the customer may achieve a bit rate below the maximum capacity of the modem. This access speed may provide the user sufficient service quality for certain Internet applications, such as e-mail or Telnet, as these applications do not require high-speed connections to perform well. However, with applications such as the World Wide Web and the transfer of large files, the service quality or user experience is likely to deteriorate. These applications perform better with a high-speed connection as they require that much more information be transmitted to the user. With emerging applications such as streaming video an analog dial-up connection will also provide the user with poor service quality.

During peak usage periods, a user attempting to establish a connection with their ISP may receive a busy signal from the ISP and be unable to connect to the Internet. The ISP's modem pool does not provide a unique connection for each of the ISP's customers. Rather, the modem pool is a shared

resource that is designed to provide a level of service specified by the ISP.

To appreciate the full impact of narrowband dial-up connections to the Internet on consumers of Internet services, it is also necessary to examine the influence of narrowband connection on providers of Internet content, services, and commercial activities. Providers of content on the Internet must design that content with the recognition that consumers may be connecting over a narrowband dial-up connection.[83] For example, a commercial web site that sells consumer goods would be limited in the ways that descriptions of the consumer goods could be provided. Rather than providing information about products in video format, text and pictures might be preferred, thus limiting the amount and type of information that could be provided to prospective customers.[84] Thus, the widespread use of narrowband connections also influences the content available on the Internet.

Dial-up analog access will likely continue to be the dominant Internet access facility for the majority of households over the next four years.[85] Analog dial-up Internet access facilities, while ubiquitous, provide a narrowband connection for the user. Users will be constrained in their ability to efficiently access and obtain information, especially information associated with large data files, such as video, computer programs, music, and pictures.

Digital Dial-Up Internet Access Facilities (ISDN)

Local telephone companies provide another Internet access facility known as Integrated Services Digital Network (ISDN). The ISDN concept was developed under the AT&T monopoly and envisioned the transformation of the PSTN from an analog network to an end-to-end digital network.[86] With the exception of one portion of the network, the local loops that connected the end-user to the telephone company switching centers, this transformation occurred for most telephone companies during the 1980s and 1990s. ISDN today refers to the transformation of the local loop from analog to digital, but on a line-by-line basis rather than a wholesale changeover of loop technology.

Changing the customer loop from analog to digital with ISDN provides the user with a faster connection to an ISP, but still relies on the telephone company's switch to establish the connection to the ISP. Data rates of 128 kbps can be obtained with ISDN.[87] To utilize ISDN, the user must purchase customer premise equipment that will either convert or replace their existing voice telephone equipment and a special ISDN modem. The user's ISP must also be compatible with the ISDN service.[88] ISDN significantly improves the quality of service for the Internet user as compared to an analog connection, but is not, by the FCC's definition, broadband.

ISDN, while a mature technology, has been leapfrogged by local exchange carrier's Digital

---

[83] See, for example, Cheng, Kipp. "And the Band Played On: Some aren't waiting for broadband to create content." *ADWEEK*, September 13, 1999.

[84] See, for example, the discussion of the benefits of cache to overcome the tendency to "dumb-down" content at Akamai (a provider of commercial cache service) at: http://www.akamai.com/html/aa/over.html (accessed December 4, 2000.)

[85] "Deployment of Advanced Telecommunications Capability: Second Report." Federal Communications Commission, August 2000. Figure 25.

[86] *Engineering and Operations in the Bell System, 2nd Edition.* AT&T Bell Laboratories, Murray Hill, N.J. 1983, p. 464.

[87] See, for example: http://www.ralphb.net/ISDN/defs.html

[88] As ISDN is a digital service, the ISP must be have digital termination capability at its end of the connection. Many ISPs support ISDN.

Subscriber Line (DSL) services, and does not appear to be widely promoted by some companies.[89] Pricing and availability of ISDN varies. Prices in a recent survey of rates ranged from less than $20 per month to $250 per month for flat-rate service.[90] ISDN service has also been provided on an open access basis with the ISDN provider offering the connection to ISPs on a non-discriminatory basis.

Digital Subscriber Line Internet Access Facilities

Digital Subscriber Line (DSL) services are another Internet access facility provided by local telephone companies. DSL service differs from dial-up services in two important respects. First, DSL service bypasses the telephone company's switching equipment and thus provides an "always on" connection for the end user. This saves time in establishing connections and opens up the possibility of new online services for the end user. The other advantage of DSL is the high-speed data communications capability associated with the service, with some configurations of DSL permitting data rates of up to 53 megabits per second (Mbps), but more typical deployments provide data rates of 1.54 Mbps or less. The 1.54 Mbps data rate is approximately 27 times faster than a 56-kbps modem. However, actual DSL data rates depend on a number of factors. At the end of the third quarter of 2000, approximately 1.7 million DSL lines were in service in the U.S., 67% of which were deployed to serve residential customers.[91]

DSL service utilizes the same pair of copper wires that connects telephone subscribers to the telephone company switches that provide voice services. In fact, most DSL deployments allow the continuation of voice service provision along with high-speed data communications over the same pair of wires. Diagram A2 shows a simplified technical configuration of DSL. Special electronics are added to the subscriber's local loop which create a high frequency communication path from the subscriber to the telephone company's central office. On the user's end, subscriber equipment is deployed that splits the bandwidth on the telephone line into low-frequency voice and high-frequency data portions. Customers must configure their computers with a DSL modem. At the telephone company central office, the circuit is split, with the voice portion connecting to the telephone company's voice switching equipment and the data portion connecting to a data network that can provide Internet service.

Given that about 95% of households in the U.S. have telephone service, DSL may appear to have the characteristics necessary to facilitate rapid nationwide broadband deployment. However, upgrading conventional phone lines to DSL is not necessarily easy or inexpensive. For a customer to receive DSL service their phone line must meet certain technical specifications. First, loops that are longer than 18,000 feet (about 3.4 miles) are not capable of receiving any grade of DSL service.[92] Lines that are qualified based on distance then face further qualification. Equipment used to improve the sound quality of telephone calls must be removed from the loop before high-speed data can be provided. Another problem with loop plant that interferes with the deployment of DSL is the existence of "bridged taps." These occur in loop plant where connections are abandoned without being fully

[89] For example, the Verizon Residential Customer service web page does not mention ISDN, even though this service is available. For example, see: http://www.bell-atl.com/foryourhome/MD/index.html . Accessed December 4, 2000.

[90] Consumer Project on Technology. Information accessed on December 4, 2000 at: http://www.cptech.org/isdn/flat.html

[91] "TeleChoice DSL Deployment Summary–Updated 11/13/00." Accessed December 4, 2000 at: http://www.xdsl.com/content/resources/deployment_info.asp

[92] DSL Forum, General Technical Information. Accessed December 4, 2000 at: http://www.adsl.com/dsl_forum.html

decommissioned and result in reduced ability to transmit high-speed data over the loop.[93] Checking for the existence of bridged taps can be a costly and time-consuming process. Lines may need to be inspected manually over significant distances. It is expected that as many as 20% of local telephone company lines will never be able to provide DSL services.[94]

Despite these drawbacks, local telephone companies continue to deploy DSL service aggressively and are second in number only to cable-company Internet access facilities among broadband service providers. Major local exchange carriers have announced significant investments to upgrade their networks to extend the reach of DSL to a larger number of customers. SBC recently announced that it would spend $6 billion to extend DSL's reach to all of its subscribers.[95] DSL upgrades are also being pursued by smaller local carriers.[96]

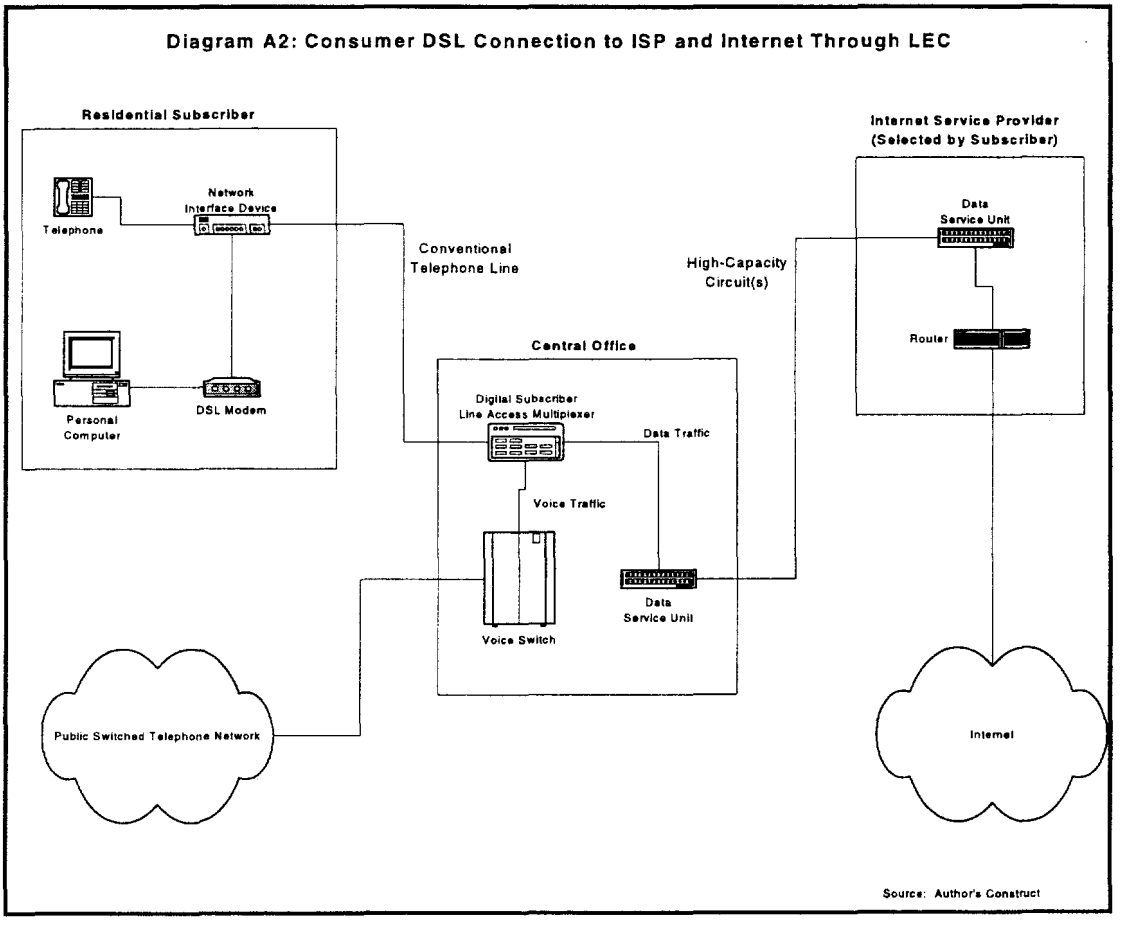

The emergence of "Data Local Exchange Carriers" or DLECs have stimulated DSL deployment further. Using the open access provisions of the Telecommunications Act of 1996 that allow for the

[93] Abe, George. *Residential Broadband.* Page 279.

[94] Federal Communications Commission. *In the Matter of Inquiry Concerning the Deployment of Advanced Telecommunications Capability to All Americans in a Reasonable and Timely Fashion, and Possible Steps to Accelerate Such Deployment Pursuant to Section 706 of the Telecommunications Act of 1996.* CC Docket No. 98-146. Released February 2, 1999. ¶46.

[95] *Telecommunications Reports–TR Daily,* "SBC to Invest $6 billion in DSL Upgrade." October 18, 1999.

[96] *America's Network,* "Voice over DSL can help carriers deliver 'bundles' of joy." December 1, 1999.

purchase of unbundled network elements from incumbent local exchange carriers, the DLECs construct data networks in metropolitan areas. They then connect end-users to these networks utilizing unbundled DSL loops and provide Internet access facilities to unaffiliated ISPs.[97] Thus, rather than connecting directly to an ISP, as is shown in Diagram A2, the DLEC would connect both to the subscriber's DSL line and the ISP, providing an intermediary network layer. The DLECs have benefitted from the FCC's line sharing Order which requires the unbundling of bandwidth on local telephone company broadband access facilities.

Satellite Internet Access Facilities

Internet access facilities are also currently available via satellite systems. The satellite services marketed for household use are Hughes Electronics' DirecPC, with about 60,000 subscribers in the U.S. as of April 2000,[98] and StarBand, which is a new service developed through a strategic collaboration of Gilat Satellite Networks, Microsoft Corporation and Echostar Communications. These systems utilize a converted direct broadcast satellite system to provide an Internet access facility. With DirecPC, the subscriber receives downstream data from the Internet via the satellite connection, while the connection that sends information to the Internet utilizes a conventional analog dial-up connection over the PSTN (see Diagram A3).[99]

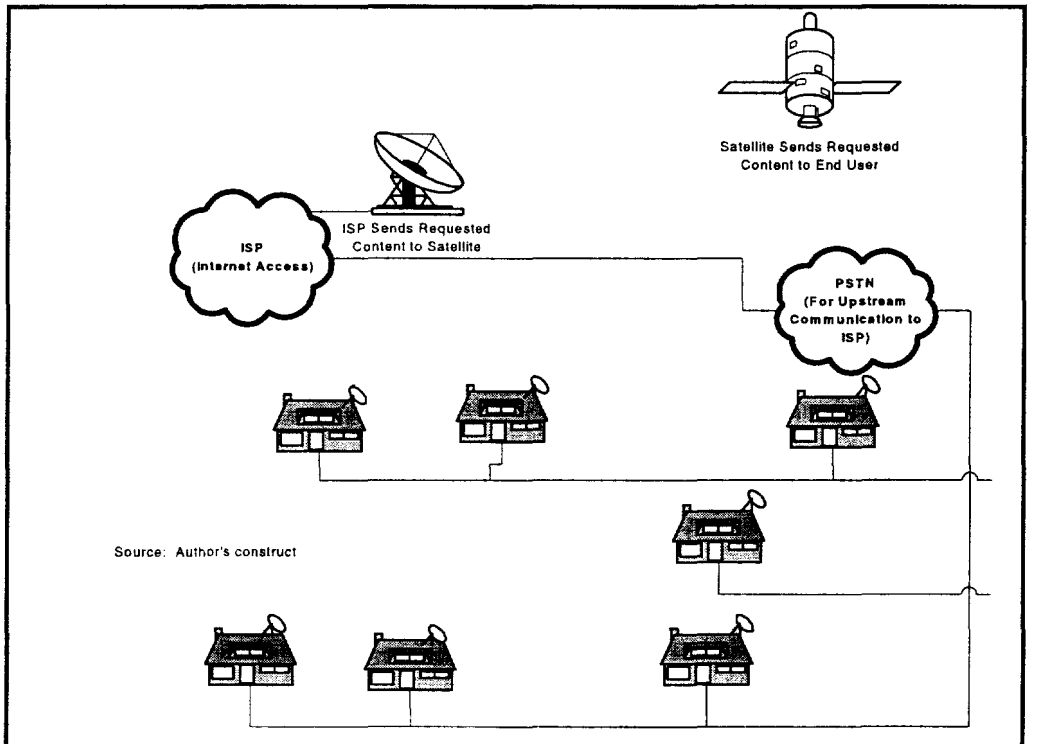

Diagram A3: DirecPC Access Network

[97] See, for example, "Start-Up Leads Phone Cause in Battle for Internet Access," *New York Times,* May 17, 1999, p. C1. See also, the Covad website, accessed December 4, 2000 at: http://www.covad.com/dslfacts/whatisdsl/covadyourispyou.shtml

[98] "AOL and Hughes to Test Satellite Service in 16 Cities," *New York Times,* Interactive Edition, June 1, 2000.

[99] For a simple technical summary of the DirecPC technology, see: http://www.direcpc.com/consumer/work/work.html . Accessed December 4, 2000.

Thus, while the downstream data speed available from DirecPC is a maximum of 400 kbps, the service is not broadband by the FCC's definition. This speed is not guaranteed and according to company documents can be significantly lowered.[100] The new StarBand service offers "always on" service, providing both the uplink and downlink via the satellite facility. StarBand, while indicating that maximum bandwidth from its system is 500 kbps downstream and 150 kbps upstream, admits that during peak periods throughput is likely to be considerably lower: "StarBand's goal is to provide 150 kbps download speeds and upload speeds of 50 kbps during the busiest hours on the net."[101] Even if the StarBand system was offering at maximum engineered capacity, the upstream data speed would not classify the service as broadband under the FCC's definition. Utilizing either system requires a clear line of sight to the southern horizon and a small dish antenna mounted on the customer's premises. While both the services are available nationwide, local geography or zoning restrictions may prevent the service from being deployed. Pricing of DirecPC includes the purchase of a $200 antenna and recurring charges in the $20 to $30 per month range. However, DirecPC is a metered service that limits the subscriber's number of hours online and the amount of data per hour that can be sent using the service.[102] DirecPC provides for customer choice of ISP, as does the emerging satellite provider Tachyon (who focuses on the business market). The Tachyon service markets directly to ISPs who will then resell its services.[103] Customers of DirecPC would likely find that company's bundled ISP service less expensive than retaining their existing ISP.[104] StarBand offers its customers proprietary Internet services, which will either be offered by the Microsoft Network or StarBand's own ISP, depending on the customer's location.[105] Prices for StarBand include approximately $200 for installation and $60-$70 per month for subscription. However, StarBand indicates that the purchase of a specially configured computer may be required.[106] If you do not purchase a new computer, you face $400 in costs for necessary hardware.[107]

Fixed Terrestrial Wireless Systems

Fixed terrestrial wireless systems have the potential for broadband data communications. These services are in the early phases of deployment, with fewer than 50,000 subscribers estimated nationwide.[108]

Local Multipoint Distribution Service (LMDS) is one variety of broadband fixed wireless technology. LMDS uses a network architecture that is similar to cellular telephone networks, except that users of the service are in fixed locations, using special antennas that are attached to the customer's residence. Trials are underway in some markets and build-out of service has been

---

[100] See DirecPC's "Fair Access Policy" at http://www.direcpc.com/consumer/cost/fair.html . Accessed December 4, 2000.

[101] See the StarBand web site, accessed December 4, 2000 at: http://www.starband.com/whatis/index.htm

[102] DirecPC's description of pricing plans identify a block of hours associated with a plan and the charges for usage overruns. See, http://www.direcpc.com/consumer/cost/cost.html#isp

[103] See Tachyon's partnering description at: http://www.tachyon.net/sign.html . Accessed December 4, 2000

[104] See pricing chart at: http://www.direcpc.com/consumer/cost/cost.html#isp . Accessed December 4, 2000

[105] See: http://www.starband.com/faq/isvc.htm#host . Accessed December 4, 2000.

[106] http://www.starband.com/wheretobuy/index.htm . Accessed December 4, 2000.

[107] http://www.starband.com/wheretobuy/DN.htm . Accessed December 4, 2000.

[108] Federal Communications Commission. "Deployment of Advanced Telecommunications Capability: Second Report. August 2000. ¶107.

promised in major market areas.[109] LMDS requires line-of-sight transmission and, due to the frequency range in which it operates, is subject to signal degradation due to environmental factors such as rain or foliage.[110] This makes deployment of LMDS difficult in hilly and wooded areas. Another broadband fixed wireless technology on the horizon is multichannel multipoint distribution system or MMDS. This service is currently undergoing trials.[111]

Some vendors view wireless broadband deployment as a possibility where landline deployment is uneconomical.[112] Thus, these fixed wireless services may not always be direct competitors for wire-line-based services, such as cable modem and DSL.

Cable Television Internet Access Facilities

At this time, the residential broadband Internet access facilities offered by cable television companies are the most widely deployed, surpassing DSL.[113] Data communications over cable facilities can provide nearly 30 megabits per second (MBPS) of data transmission, approximately 500 times the data rate capable with a 56 kbps modem. However, as is discussed further below, the actual data speed enjoyed by the customer is likely to be much lower. As of November 2000, Kinetic Strategies Inc., reported approximately 3.2 million cable Internet access subscribers in the U.S.[114] Nationwide subscribers to cable modem services increased by 22% between second and third quarter 2000.[115] About 95% of households in the U.S. are passed by cable systems, and about 65% of households receive conventional television programming over the cable system.[116] This indicates that cable broadband access has the potential to reach most households in the U.S.

Cable networks initially emerged to provide improved quality of broadcast television by linking multiple residences to a community antenna using broadband coaxial cable technology. The service evolved to provide programming that was not available from local broadcasters, such as C-SPAN, the Discovery Channel, so-called "Superstations," premium channels, and pay-per-view events. Today, the core business of cable television companies remains the delivery of programming. Cable television networks, while providing broadband transmission, are largely one-way networks, with the programming flowing from the head-end of the cable system to the subscribers. Two-way communication capability over these networks has, until recently, been limited to polling for billing purposes of users' requests for pay-per-view events.

The two-way broadband communications potential of cable television systems has garnered attention

---

[109] Federal Communications Commission. *In the Matter of Implementation of Section 6002(b) of the Omnibus Budget Reconciliation Act of 1993. Annual Report and Analysis of Competitive Market Conditions With Respect to Commercial Mobile Services.* August 18, 2000, Appendix E, Section b.

[110] Abe, George. *Residential Broadband.* Page 362.

[111] "MCI Begins Trials of Fixed Wireless Service," *Telecommunications Reports, TR Daily.* March 7, 2000.

[112] Ibid.

[113] Cable television Internet access facilities are also known as "cable modem services" or "cable modem access."

[114] "Cable Modem Market Stats & Projections." November 8, 2000. Accessed December 4, 2000 at: http://www.cabledatacomnews.com/cmic/cmic16.html

[115] Ibid.

[116] *Statistical Abstract of the United States, 119th Edition.* U.S. Department of Commerce, Bureau of Census, 1999, Table 921.

recently with AT&T's acquisition of TCI and MediaOne, and alliances with Time-Warner.[117] Much of the attention surrounding these mergers and alliances has focused on the upgrades to these cable operators' plant that will provide Internet services over a cable company's networks. However, it is important to keep in perspective the business plans of cable operators in order to gain a better understanding of the reasons for these cable network upgrades and the current debate over broadband open access.

Cable systems of a decade ago provided relatively few channel choices and limited potential for two-way communications. Cable companies faced competition only from broadcast television and video rentals. The lack of competitive pressure did not provide cable operators incentives to improve their technology.

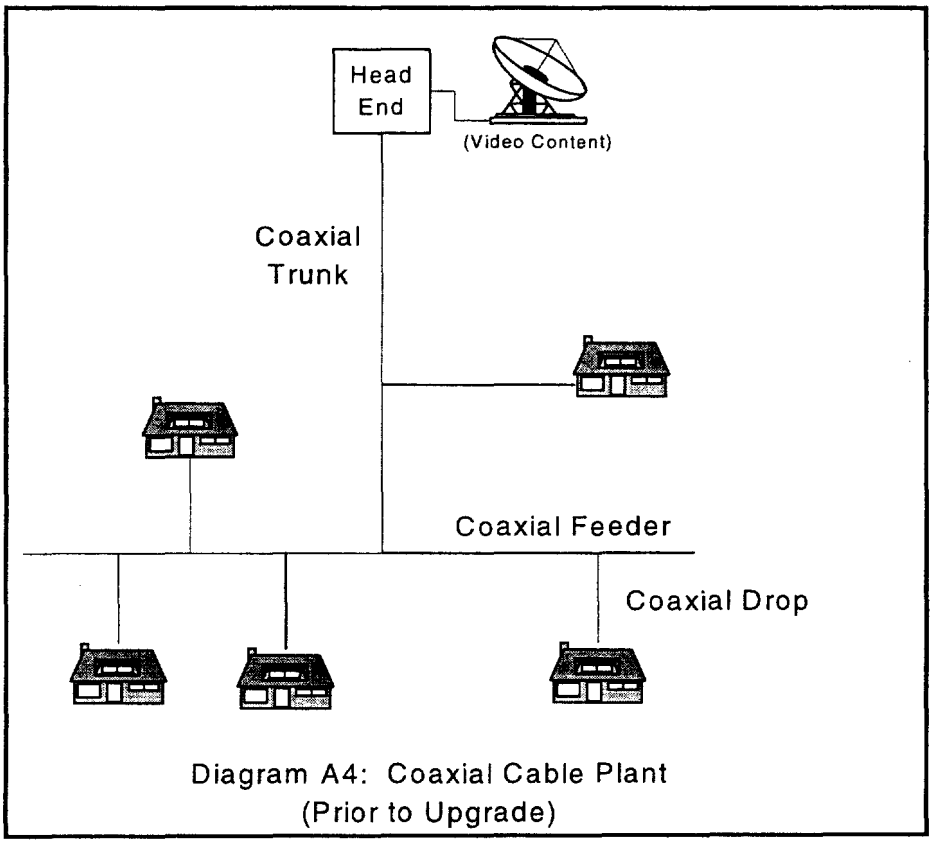

Diagram A4: Coaxial Cable Plant (Prior to Upgrade)

This changed in the early 1990s with the advent of direct satellite broadcast systems (DBS). These systems offered viewers an alternative to cable that was superior in some ways, including a much larger selection of channels and programming options, including greatly expanded premium channels and pay-per-view opportunities. Also, DBS only requires the user to only install a small fixed dish antenna rather than the large moveable dish antennas associated with earlier satellite systems. The competition from DBS provided the incentive for cable operators to upgrade their systems from the coaxial cable technology to hybrid systems that updated portions of the cable plant

[117] AT&T acquired a 25% stake in Time Warner Entertainment with its purchase of MediaOne. See, MediaOne's 2000 10-k and "Consumer Groups Press for FTC Probe of Time Warner's Ownership Ties," *Telecommunications Reports, TR Daily, June 26, 2000.*

from coaxial cable to fiber optics.[118] By incorporating fiber optic cable into the cable plant, cable operators reduced the number of amplifiers on the coaxial portion of the plant, improving channel capacity, quality, and reliability,[119] and allowing for the delivery of more channels and premium services. This network upgrade also laid the foundation to provide two way services like voice telephony and Internet services in addition to an expanded range of video content.[120] Diagrams A4 and A5 illustrate the transition of the cable network from a coaxial-based to a hybrid fiber-coaxial network.

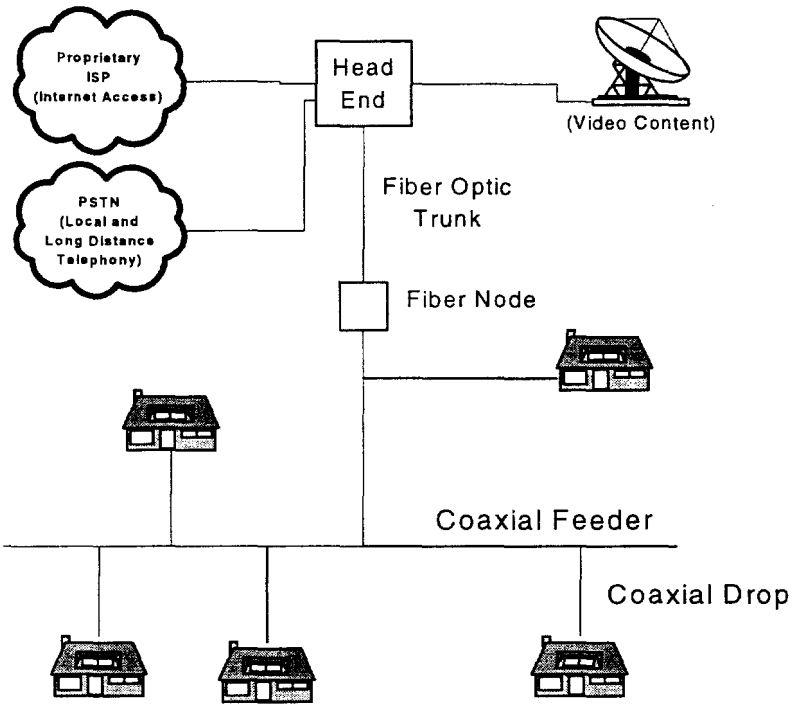

Diagram A5: Hybrid Fiber-Coaxial Cable Plant (After Upgrade)

Internet access facilities provided by cable networks have different technical characteristics than the access facilities discussed earlier, especially those associated with the PSTN. Unlike dial-up or DSL access, cable access networks are shared networks. A fixed amount of bandwidth is available for the users to share in the broadband two-way portion of the network. Naturally, not all of these homes will subscribe to the broadband two-way services. Thus the bandwidth available for any individual subscriber will depend on the number of subscribers and the demands that all other users are placing on the network. For example, if multiple users were to attempt to download large files, the amount of bandwidth available for all users could be considerably diminished. The amount of bandwidth available per subscriber depends on both the amount of total bandwidth available to share (which is

[118] Maxwell, Kim. *Residential Broadband: An Insider's Guide to the Battle for the Last Mile*, John Wiley & Sons, New York, 1999, page 249.

[119] Abe, George. *Residential Broadband*, Macmillan Technical Publishing, Indianapolis, page 167.

[120] Op cit, page 161.

determined by the cable company) and the number of subscribers served by a node.[121] When cable networks are upgraded for two-way communications, the network serves 500 to 2000 homes from each network node.[122]

In order to facilitate data communications over cable, the cable industry has developed a standard known as Data Over Cable Service Interface Specification or DOCSIS. DOCSIS allows users to easily identify computer equipment that is compatible with their cable network. DOCSIS is an open standard, which means that any company can develop and sell equipment (e.g., the cable modems) that conforms to the standard and any retailer can sell the equipment.[123] An end-user on a DOCSIS system is free to choose from a wide variety of manufacturers of cable modem equipment, and to purchase this equipment at a wide variety of retailers.

---

[121] Congestion on the cable data network can be addressed by reducing the number of households served by a node (by building more nodes), increasing the amount of bandwidth available on the cable system dedicated to broadband data communications, or by implementing usage-restricting policies for customers.

[122] "Overview of Cable Modem Technology and Services." *Cable Datacom News*. Accessed December 4, 2000 at: http://www.cabledatacomnews.com/cmic/cmic1.html

[123] See for example, "DOCSIS Vendors Meet Performance Challenge." *Cable Datacom News*. Accessed December 4, 2000 at: http://www.cabledatacomnews.com/oct00/oct00-6.html

Appendix B: Background on U.S. Data Telecommunications Policy

The foundation of U.S. telecommunications policy toward use of telecommunications networks for data applications originated 30 years ago, driven by the advent of the mainframe computer and time sharing processing. Time sharing processing allowed remote users to access and utilize computing power on powerful mainframe computers. In the mid 1960s, AT&T still maintained its monopoly in the provision of local and long distance services, thus, remote users of computing power employed AT&T's communications facilities to engage in data processing. The combination of telephone and data processing technologies attracted the attention of the FCC, which launched an investigation into this issue in 1966. The FCC's First Computer Inquiry examined the question of how data processing and telecommunications should be treated from a regulatory perspective. As a result of the FCC's analysis, policy was implemented that continues to influence the computer and telecommunications industries today. The FCC's 1971 *Computer I* decision placed data processing squarely in the unregulated sector of the economy. The FCC identified the non-data processing services that AT&T could continue to provide, what it called at the time "message switching." However, the FCC also addressed the issue of whether AT&T should be prohibited outright from providing data processing services. The FCC's answer was no, with the condition that AT&T provide its data processing operations through a fully separate subsidiary.[124] With regard to the notion that telephone services and data processing services could be blended, the FCC decided to address the so-called hybrid services on a case-by-case basis.[125]

Changes in technology and difficulty in delineating hybrid services led the FCC to launch a second computer inquiry in 1976, with a Final Order in 1980.[126] *Computer II* developed and applied the concepts of "basic" and "enhanced" services to identify what would be unregulated data processing (enhanced services) and what would remain regulated telephone service (basic services). The separate subsidiary restriction of *Computer I* was carried forward with *Computer II*, and transferred to the newly created RBOCs. The divestiture decree explicitly prohibited the RBOCs from providing interLATA information services, in addition to the provision of interLATA message toll service.[127] This quarantine kept the RBOCs out of the provision of Internet services.

In 1986, the FCC released its *Computer III* ruling. This ruling marked the introduction of the unbundling of the local exchange network and the provision of equal access to those unbundled network elements, a policy that is known as Open Network Architecture.[128] The unbundling process provided tariffed network elements, making the monopoly telephone company's economies of scale and scope available to other firms.[129] Open Network Architecture laid the groundwork for the

---

[124] Regulatory Pricing Problems Presented by the Interdependence of Computer and Communication Services and Facilities, (*Computer I*) Final Decision and Order, 28 FCC 2d 267, ¶12.

[125] *Computer I*, 28 FCC 2d at 276, ¶27.

[126] *In the Matter of Amendment of Section 64.702 of the Commission's Rules and Regulations (Second Computer Inquiry)*, 77 FCC 2d (1980).

[127] Modification of Final Judgement, §II(D)(1).

[128] The FCC labeled the concept of equal access in its *Computer III* ruling "Comparatively Efficient Interconnection" or CEI.

[129] Prior to the Telecommunications Act of 1996, the unbundling of telephone company networks promoted the growth of new companies providing new services that combined computer technology with network elements controlled by the local telephone company. Examples include: voice mail, alarm monitoring, Internet services, telemetry, and other enhanced services.

network unbundling that was the cornerstone of the Telecommunications Act of 1996.

Under the Telecommunications Act of 1996 the legal interpretation of data processing was readdressed. The Act gave basic and enhanced services a slightly different interpretation. "Basic Services" were reflected in the Telecommunications Act's definition of *Telecommunications Service:*

> The term "telecommunications service" means the offering of telecommunications for a fee directly to the public, or to such classes of users as to be effectively available directly to the public, regardless of the facilities used.[130]

Furthermore, the term "telecommunications" is defined as "the transmission, between or among points specified by the user, of information of the user's choosing, without change in the form or content of the information as sent and received."[131]

The concept of "enhanced services" was captured in the Telecommunications Act's definition of *Information Services*:

> ... the offering of a capability for generating, acquiring, storing, transforming, processing, retrieving, utilizing, or making available information via telecommunications, and includes electronic publishing, but does not include any use of any such capability for the management, control, or operation of a telecommunications system or the management of a telecommunications service.[132]

This distinction between information and telecommunications services within the context of the Telecommunications Act is important as providers of *telecommunications services* are held to higher regulatory standards than are providers of information services.

[130] Telecommunications Act of 1996, Section 3(a)(51).

[131] Telecommunications Act of 1996, Section 3(a)(48).

[132] Telecommunications Act of 1996, Section 3(a)(41).

Appendix C: Expected Input Pricing Response

Implementation of open access for cable providers is essentially a two-part process. The first part of this process is the requirement of open access, i.e., that cable companies provide Internet access facilities on a nondiscriminatory basis to ISPs, allowing customers to choose their ISP. Open access alone, however, would still leave the cable company in a monopoly position as the provider of the broadband Internet access facilities. The second part of the process is the establishment of agreements between ISPs and cable companies, once open access was required. The expected behavior of a cable company toward competing ISPs in an open access environment is an important issue.

Simply requiring open access to cable Internet access facilities would leave the issue of the pricing of these services unaddressed. Open access would force the cable operator (or its ISP affiliate) to face competition in the Internet service provision market, but would leave the cable operator as a monopoly provider of inputs (the high-speed Internet access facilities). This is a common situation in the telecommunications industry. For example, local exchange carriers provide access to their monopoly networks to long distance carriers. The local exchange carriers may also compete against the long distance carriers in the long distance calling market.[133] This market structure has been addressed by the regulated access charge system that governs prices paid by long distance companies to local exchange carriers.

The issue of pricing monopoly inputs by firms which have competitors that use the monopoly inputs has been explored in a recent article in the *Journal of Regulatory Economics*.[134] Faced with a similar requirement to provide open access alone, the cable operator would need to determine a pricing strategy for the Internet access portion of its plant. Absent price regulation, the cable operator would be constrained only by market forces and would need to adjust prices to maximize its profits given the constraints that market forces could provide.

Given the state of the market, it is likely that a cable operator would have market power in its dealings with competing ISPs. Absent regulation, the cable company would need to choose a price to sell its Internet access service to its ISP rivals. In the best case, ISP rivals might be able to provide broadband access to a customer through DSL facilities, the cable operator would be constrained by the price of the DSL access arrangement. For example, suppose a cable company currently services a customer and charges them $50 per month for broadband access and ISP service combined. If a competing ISP could obtain a DSL connection for $35 per month from the local exchange provider, the cable company would risk losing all $50 in revenues from the customer it served, should that customer switch to DSL and the other ISP.[135] Thus the rational cable operator would be willing to

[133] RBOCs, with only two exceptions, Verizon's New York operations and SBC's Texas operations, cannot provide long distance service that crosses LATA boundaries, and thus compete against long distance carriers only in the local toll market. Other local exchange carriers, like GTE and Sprint are not restricted by LATA boundaries.

[134] Roycroft, Trevor R. "A Dynamic Model of Incumbent LEC Response to Entry Under the Terms of the Telecommunications Act of 1996." (*Journal of Regulatory Economics*, Volume 14, November, 1998.)

[135] This discussion assumes away differences in service quality that could exist between the cable modem and DSL services. For example, if the DSL available in the area provided 1.5MBPS of data throughput, while the cable modem service provided an average of twice that rate of data throughput for the customer, this non-price factor might affect the customers willingness to switch. This scenario also ignores switching costs on the part of the customer, such as the costs of having to purchase a different modem when changing from cable to DSL Internet access service. When switching costs are present, the cable operators market power is enhanced further and it would thus have less incentive to undercut its rival's prices.

sell the cable Internet access input to a rival ISP at a price slightly below $35, thus not losing all of the $50 when the customer switches ISPs.

Absent a DSL access option, any ISP wanting to use a broadband access facility would be left with the choice of building its own broadband access facilities, or purchasing access from the cable operator. The cable operator must balance the expected threat of bypass of its own facilities (i.e., the ISP builds its own broadband access network) with the pricing of its own access element. In order to explore this scenario, assume that two types of cable operators exist. Type 1 does not recognize the interrelationship between its sales in the output market (i.e., the retail market for ISP services) and its sales in the input market (i.e., its wholesale sales of broadband access to rival ISPs). Type 2 recognizes the interrelationship between its retail and wholesale sales of broadband access on its overall profits. Under this scenario, dynamic economic modeling predicts that the Type 2 firm, the firm that recognizes the relationship between its pricing decisions in its retail and wholesale markets, will price its inputs higher than would be the case for the Type 1 firm. Both the Type 1 and Type 2 firms have input (access) monopolies, but the Type 2 firm will choose even higher prices than the Type 1 firm. These higher prices emerge even though the Type 2 firm recognizes that the higher prices will lead to a higher level of bypass by the competitive ISPs.[136] Cable operators would see the world as a Type 2 firm, i.e., recognizing the interdependence between its pricing decisions in the retail and wholesale markets. In the case of the Type 2 firm, recognition of the interdependency of retail and wholesale access sales results in it choosing higher prices for the inputs that it sells to its rivals in the retail market. Profit maximization over time results in the monopoly firm choosing to take profits with high prices in the near term, while recognizing the potential for a lower market share in the future.[137]

The case discussed above assumed that the competing ISP could bypass the cable operator by building its own facilities. This assumption may be unrealistic as extreme economies of scale may exist with the provision of broadband access plant. Thus, an input bottleneck may exist for the ISP, as they would have no choice but to purchase the broadband access input from the cable operator. The cable operator would charge the monopoly price for the inputs sold to ISP rivals, leading to a lower market share for ISP rivals than would be expected in the case discussed above.[138]

The analysis discussed above indirectly addresses the issue of whether open access policy applied to cable operators, by itself, would have a financial impact on the cable firm that would threaten broadband deployment. Unregulated pricing of the cable operator's broadband telecommunications facilities would leave the cable firm in a monopoly (or in some cases, duopoly) position in the market. The cable firm would be able to extract monopoly profits from its rival ISPs when selling them the access element. Thus, arguments that broadband access, by itself, would constrain infrastructure deployment are specious since monopoly profits would result for the access inputs sold by the cable operator.

---

[136] Roycroft, T. "A Dynamic Model of Incumbent LEC Response to Entry Under the Terms of the Telecommunications Act of 1996." *Journal of Regulatory Economics*, Volume 14, November, 1998, page 221.

[137] A similar pricing philosophy is expressed in a business analysis for cable operators produced by Cisco Systems (a major supplier of equipment for two-way data communications over cable). With respect to business model assumptions regarding pricing of retail high-speed data services: "Pricing is assumed to start a US $40 per month during the first year, and then gradually decrease to US $25 per month at year 10 because of increased competition and saturation of service." *A Business Case for Two-Way Service Deployment Over HFC Networks*, Cisco Systems, Appendix A.2. Available at http://www.cisco.com/cable/solutions/cable_op_bus_rsrc.html December 4, 2000.

[138] See Roycroft, op cit, page 224.

Appendix D: Glossary of Terms

ADSL	Asymmetric Digital Subscriber Line. Digital Subscriber Line services that offer different data speeds in the upstream and downstream channels. Typically the downstream channel is larger as users receive more data than they send.
Bandwidth	A measure of the capacity of a communications channel.
Best Effort Service	On the Internet there is no centralized control of the network. As a result, service quality on the Internet is not guaranteed and may deteriorate during times of heavy use. This type of service is called best effort — you get the best the network can deliver at a point in time.
Broadband	Data communications at speeds greater than 200 kbps (FCC's definition).
Cable Modem	A device that allows connection of a computer to a cable television company's network for the delivery of Internet access service.
Cache	Data that is distributed and stored on a computer network to be closer to users. Using cached data improves service quality.
Channel	A path of communication between two or more points.
Data	Representations of information in a manner that is suitable for communication, interpretation, or processing.
Data Communications	The transfer of data between points.
Data Network	Networks that are designed to transmit data. Contrasted to a voice network, which is designed to carry voice.
DBS	Direct broadcast satellite. Powerful satellites that were designed to provide programming to end users.
Dedicated Internet Access Facility	A communications facility that is used by a single entity and not shared with others.
Dial-up Connection	Connecting to an Internet service provider using the telephone network. The telephone network's switches are used to complete the connection.
Digital Subscriber Line	High-speed communication facilities which uses a telephone company's existing local loops to connect end users to Internet service providers.
Downstream	In data networks, the receiving channel.
DSL	Digital Subscriber Line
Equal Access	The policy measure allowed customers of any long distance telephone company to make calls simply by dialing a "1" and the telephone number. Prior to equal access, customers of non-AT&T long distance companies had to dial lengthy codes to make calls.
FCC	Federal Communications Commission. The U.S. government agency responsible for oversight of telecommunications markets.

HTTP	Hypertext Transfer Protocol. The protocol that allows hypertext documents to be moved across the Internet
Hypertext	Hypertext is non-sequential text that can be created with computers. The text is enhanced with links that allow users to jump to other documents or media.
Interconnection	The process of connecting two or more telecommunications networks.
Internet	The global network of networks that enables data communications.
Internet Access Facilities	The communications technology that allows consumers of Internet services to reach their Internet service provider. Examples include the PSTN, cable television networks, satellite systems, and dedicated facilities.
Internet Services	Services provided with the Internet such as e-mail, Telnet, World Wide Web, and streaming media.
Internet Service Provider	A company that provides Internet services to its customers, and also enables those customers to connect with the Internet.
ISDN	Integrated Services Digital Network. Enhances telephone company lines to provide data speeds of up to 128 kbps.
ISP	Internet Service Provider
Kbps	Kilobits per second. A measure of data transmission speed. Thousands of bits per second.
Local Exchange	A telephone company's local calling area.
Local Exchange Carrier	A local telephone company.
Local Loop	The wires that connect a telephone company customer to the telephone company's switch.
Loop	See Local Loop.
Mbps	Megabits per second. A measure of data transmission speed. Millions of bits per second.
Modem	A device that allows digital computers to communicate over analog networks.
Narrowband	Data communications at speeds less than 200 kbps.
NAP	Network access point.
Network Access Point	A high speed network where ISPs can interconnect and exchange traffic.
Network Unbundling	The requirement that a firm that controls monopoly inputs make these inputs available to other firms.
Open Access	Access or interconnection arrangements that promote competition and allow customer choice. Also, where market forces cannot deliver customer choice, a requirement for firms which control monopoly facilities to make those facilities available for use by other firms, thus encouraging customer choice.

Open Network Architecture	An FCC policy that required that local exchange telephone companies provide open access to their network technology for use by other firms.
Portal	On the World Wide Web, a portal is a web site that provides links to other web sites. Portals may also provide Internet services like search engines, free e-mail, and personalized pages.
Preferential Dialing Patterns	Prior to the break-up of AT&T and the implementation of equal access, AT&T retained a monopoly on the "1+" dialing pattern for long distance calls. This dialing pattern gave AT&T an advantage over its rivals.
PSTN	Public Switched Telecommunications Network.
Public Switched Telecommunications Network	The telephone network provided by local and long distance telephone companies.
Switched Long Distance Services	Long distance calling that is routed through a local telephone company's switch. Switched long distance calls are initiated by customers dialing the desired number.
TCP/IP	Transmission Control Protocol/Internet Protocol. Allows computers with diverse operating systems and hardware to communicate over computer networks.
Unbundling	See Network Unbundling
Upstream	In data networks, the sending channel.
World Wide Web	The Internet application that combines hypertext with pictures, video, audio, and other data and allows users to access information from computers distributed across the Internet.
W W W	World Wide Web.