ORIGINAL

RECEIVED

FEB 16 2001

FEDERAL COMMUNICATIONS COMMISSION
OFFICE OF THE SECRETARY

KELLEY DRYE & WARREN LLP

A LIMITED LIABILITY PARTNERSHIP

1200 19TH STREET, N.W.

SUITE 500

WASHINGTON, D.C. 20036

(202) 955-9600

NEW YORK, NY
LOS ANGELES, CA
CHICAGO, IL
STAMFORD, CT
PARSIPPANY, NJ

BRUSSELS, BELGIUM
HONG KONG

AFFILIATE OFFICES
BANGKOK, THAILAND
JAKARTA, INDONESIA
MANILA, THE PHILIPPINES
MUMBAI, INDIA
TOKYO, JAPAN

FACSIMILE
(202) 955-9792

EX PARTE OR LATE FILED

February 16, 2001

JONATHAN E. CANIS
DIRECT LINE (202) 955-9664
E-MAIL: jcanis@kelleydrye.com

Via Hand Delivery

Magalie R. Salas, Secretary
Federal Communications Commission
The Portals
445 – 12th Street, SW
Washington, D.C. 20554

Re: Notice of *Ex Parte* Presentation by Metromedia Fiber Networks, Inc.
CC Docket Nos. 96-98 and 98-147

Dear Ms. Salas:

Pursuant to Section 1.1206(b)(2) of the Commission's Rules, Metromedia Fiber Networks, Inc. ("MFN"), by its undersigned counsel, submits in the above-captioned docketed proceeding this notice of an oral *ex parte* presentation made on February 14, 2001 to the following members of the Common Carrier Bureau Staff:

Brent Olson, Deputy Chief, Policy and Program Planning Division, Common Carrier Bureau
William Kehoe, Attorney, Policy and Program Planning Division, Common Carrier Bureau
Kimberly Cook, Attorney, Policy and Program Planning Division, Common Carrier Bureau
Jerome Stanshine, Network Technology Division, Office of Engineering and Technology
Paul Marrangoni, Network Technology Division, Office of Engineering and Technology

The presentations were made by:

Thomas Byrnes, President of Carrier and ISP Services, MFN
Robert Riordan, Director, LEC Relations, MFN
Karen Nations, Senior Attorney, MFN
Jonathan Canis, Kelley Drye & Warren

DC01/CANIJ/140406.1

No. of Copies rec'd 0+2
List A B C D E

The parties discussed the Commission's rules regarding efficient central office collocation, intra-office distribution, and central office entrance issues for fiber-based carriers, and the implementation of those rules. A set of talking points was distributed during the meeting; a copy is attached to this notice.

Pursuant to 1.1206(b)(2), MFN submits an original and one (1) copy of this oral *ex parte* notification for inclusion in the public record of the above-referenced proceedings. Please direct any questions regarding this matter to the undersigned.

Respectfully submitted,

Jonathan E. Canis

Encl:
cc: Brent Olson
William Kehoe
Kimberly Cook
Jerome Stanshine
Paul Marrangoni
International Transcription Service

METROMEDIA FIBER NETWORKS, INC.

EFFICIENT C.O. ENTRANCE & COLLOCATION FOR FIBER-BASED CARRIERS

February 14, 2001

Thomas Byrnes, Robert Riordan,
Karen Nations, MFN

Jon Canis, KDW

MFN's PROPOSAL TO PROVIDE COMPETITIVE TRANSPORT

- EFFICIENT ACCESS TO ILEC UNEs
  - INCL. DARK FIBER LOOP & TRANSPORT
- EFFICIENT MEANS OF CROSS-CONNECTING TO COLLOCATED CLECs
  - AS NETWORK AGGREGATION & DISTRIBUTION POINT, C.O.s ARE NECESSARY
  - FCC HAD EFFECTIVE RULES, BUT COURT OF APPEALS REQUIRES NEW APPROACH

MFN CENTRAL OFFICE DISTRIBUTION

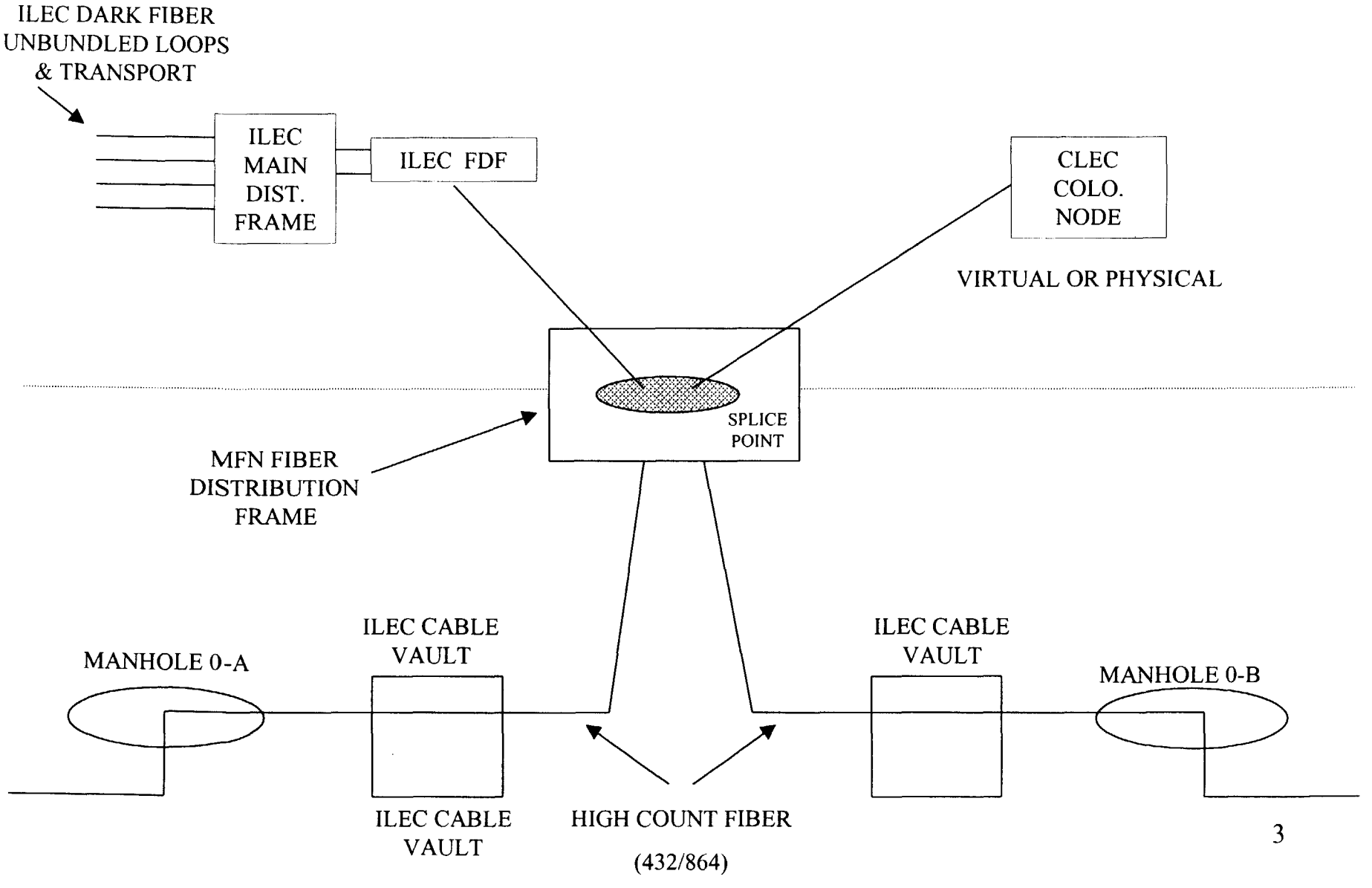

MFN's PROPOSAL (cont'd)

- NOW, A COLLOCATED CLEC CAN PULL MFN's FIBER INTO THE C.O. TO TERMINATE IN ITS CAGE
  - NO ILEC IN COUNTRY DISPUTES THIS
  - PROBLEMS:
    - ONLY ONE FIBER AT AT TIME
    - REQUIRES MULTIPLE PULLS TO EACH NEW CLEC, MULTIPLE STREET DIGS
    - DESTROYS ECONOMIES OF SCALE & OPERATIONAL EFFICIENCIES

MFN's PROPOSAL (cont'd)

- SOLUTION: ESTABLISH RULES PROVIDING SAME CONNECTIVITY TO FIBER AS TO COPPER
  - CLECs NOW HAVE COLLOCATED ACCESS TO "DARK COPPER"
  - TELECOM ACT DEMANDS SAME TREATMENT OF FIBER PROVIDERS
    - PARITY IN INTERCONNECTION FROM BOTH CARRIER & CUSTOMER OPERATIONS PERSPECTIVE

MFN's PROPOSAL (cont'd)

- MFN HAS MET THESE NEEDS IN NEGOTIATED ILEC AGREEMENTS
  1 TRADITIONAL COLLOCATION
    - GTE, BELLSOUTH, QWEST
  2 "CATT" ARRANGEMENT
    - VERIZON
  3 "STABLE MANHOLE ZERO"
    - SBC

MFN's PROPOSAL (cont'd)

1 TRADITIONAL COLLOCATION

- TYPICAL PHYSICAL COLLOCATION ARRANGEMENT
  - MFN DELIVERS 432-COUNT FIBER TO ILEC CABLE VAULT
  - ILEC RUNS 432-COUNT FIBER TO MFN'S COLLOCATED FIBER DISTRIBUTION FRAME
  - FROM FDF, ILEC PROVIDES CROSS-CONNECTS TO ITS DARK FIBER UNEs & TO OTHER COLLOCATED CLECs

Typical Collocation Arrangement in Bell South, GTE, and Qwest Central Offices

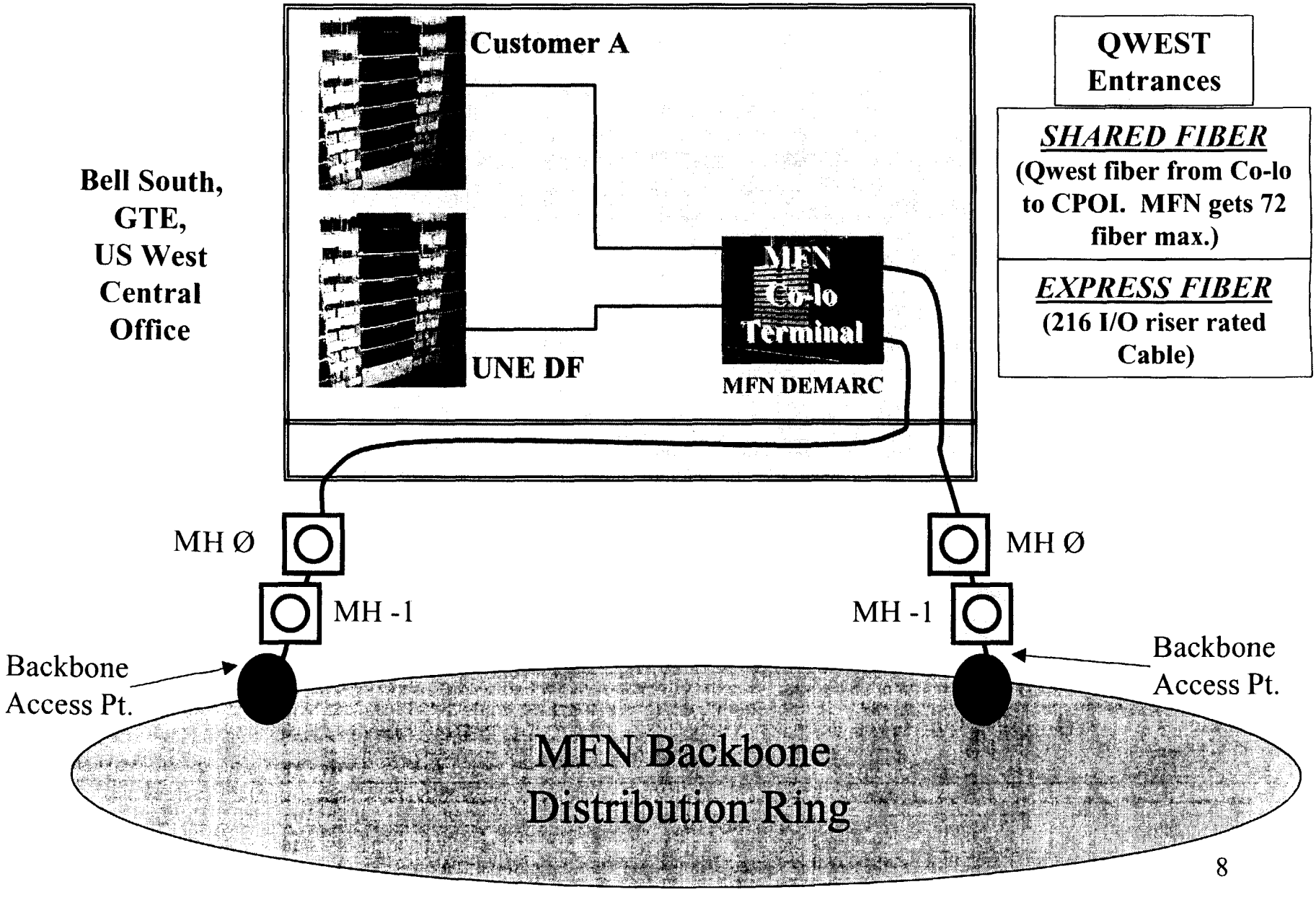

MFN's PROPOSAL (cont'd)

2 COMPETITIVE ALTERNATE TRANSPORT TERMINAL ("CATT")

- VERIZON TAKES MFN 432-COUNT FIBER & PULLS IT TO A SPLICE POINT
  - SPLICE POINT CAN BE IN CABLE VAULT, OR ELSEWHERE IN C.O.
- FROM SPLICE POINT, VERIZON CONNECTS FIBER STRANDS TO VIRTUALLY OR PHYSICALLY COLLOCATED CLECs OR UNEs

Typical CATT Arrangement in Verizon (BA) Central Office

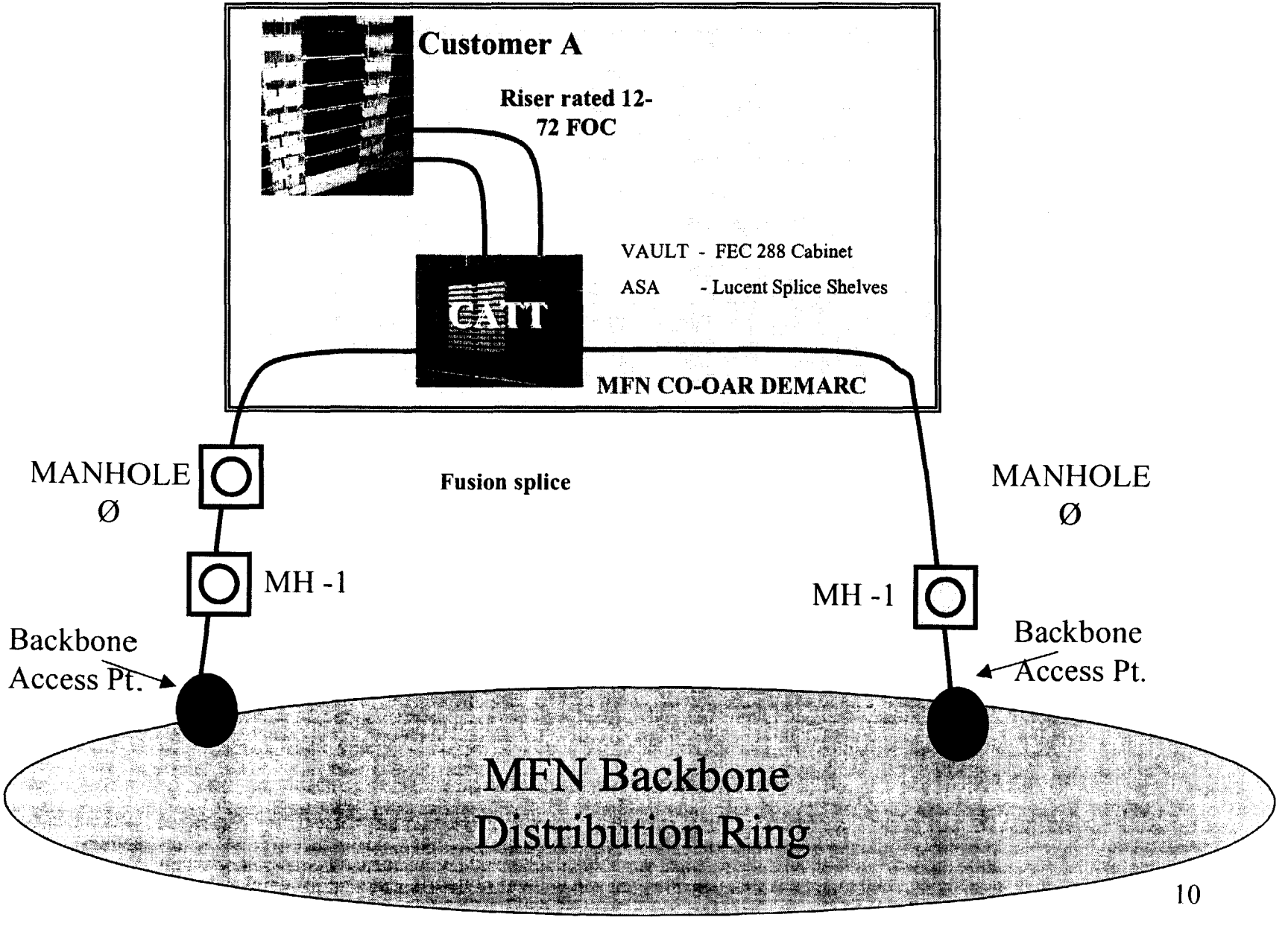

MFN's PROPOSAL (cont'd)

3 STABLE MANHOLE ZERO

- MFN DELIVERS 432-COUNT FIBER TO 1 OR 2 PRE-DEFINED MANHOLES
- SBC TAKES CABLE FROM MANHOLES INTO ITS C.O. & CROSS-CONNECTS TO COLLOCATED CLECs
  - CLEC PAYS SBC DIRECTLY FOR COSTS OF CROSS-CONNECTION

Typical Manhole Zero Arrangement in SBC Central Office

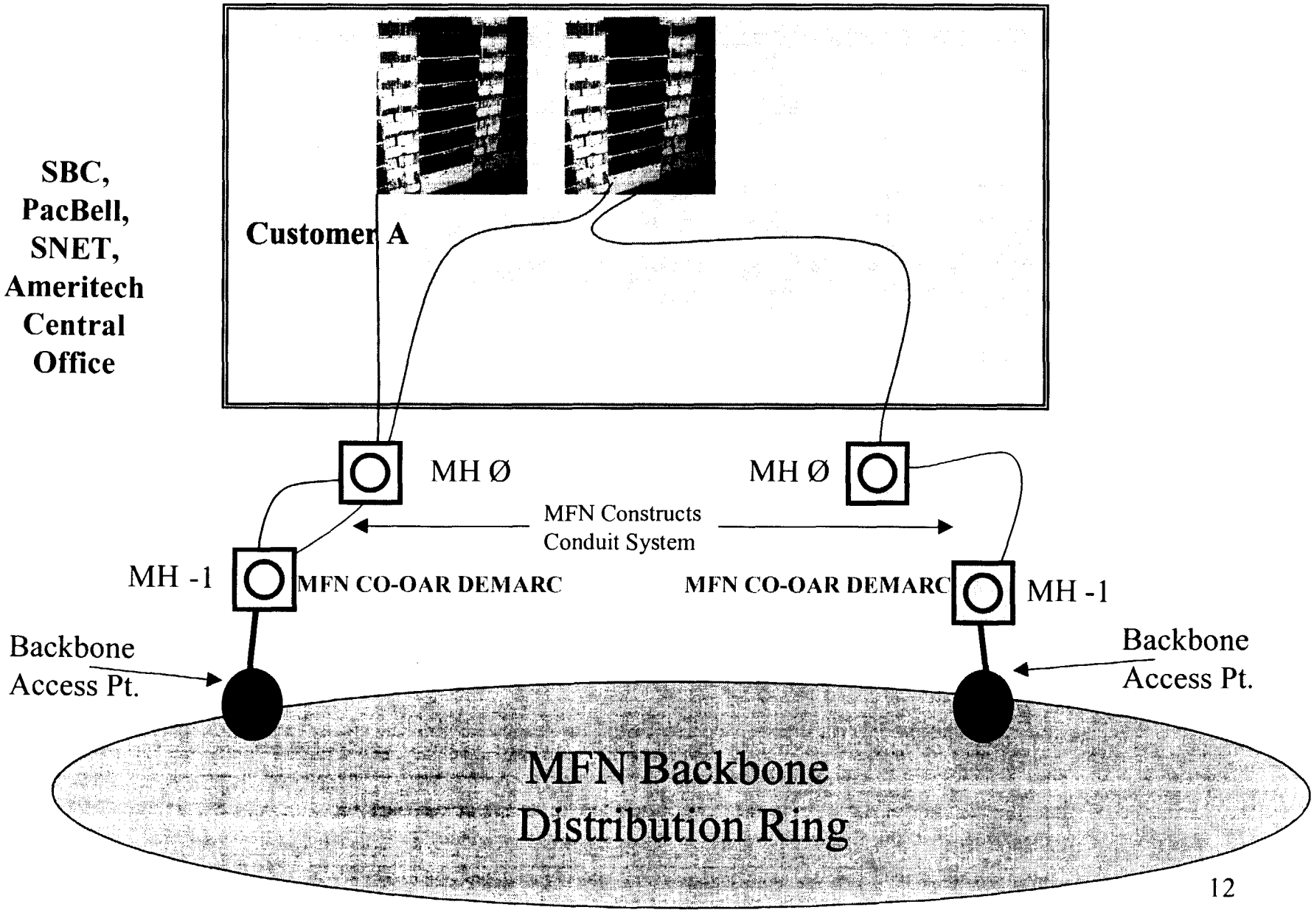

MFN's PROPOSAL (cont'd)

- THESE ARRANGEMENTS ARE ALL "NECESSARY" IN THAT THEY PREVENT GROSS INEFFICIENCIES
  - ALL ALLOW 1 "PULL" OF FIBER INTO C.O. TO SERVE MULTIPLE CLECs & MFN's ACCESS TO UNEs
    - ELIMINATES NEED FOR NEW PULL FOR EVERY APPLICATION
    - HI-COUNT FIBER = ECONOMIES OF SCALE
    - MINIMIZES DIGGING UP CITY STREETS

MFN's PROPOSAL (cont'd)

- ILECs HAVE NO TECHNICAL OR OPERATIONAL REASON TO DISALLOW
  - 432-COUNT FIBER < 1" DIAMETER
    - USE CONSERVES C.O. CONDUIT SPACE, CABLE RACKING SPACE, CABLE VAULT SPACE
    - SAVES ILEC LABOR, COST
  - REDUCES NEED FOR STREET DIGGING
  - ONLY BASIS FOR ILEC OPPOSITION IS TO HAMSTRING TRANSPORT COMPETITION

RELIEF REQUESTED

- ALL THREE METHODS OF C.O. ENTRANCE & UNE ACCESS SHOULD BE AVAILABLE
  - CATT, STABLE MANHOLE 0, TRADITIONAL COLLOCATION
  - FCC SHOULD CODIFY ALL 3 OPTIONS
  - MUST ENSURE THAT ARRANGEMENTS ALREADY ESTABLISHED BY MFN & ILECs ARE NOT UNDONE BY COURT

RULES FOR TRADITIONAL COLLOCATION

- MUST BE AVAILABLE FOR MFN TO OBTAIN ACCESS TO ILEC DARK FIBER UNEs
- MUST BE AVAILABLE FOR CROSS-CONNECTION TO CLECs

RULES FOR TRADITIONAL COLLOCATION (cont'd)

1 ACCESS TO ILEC DARK FIBER UNEs

- PROBLEM: SBC ARGUES THAT MFN FIBER DISTRIBUTION FRAME IS "NOT ENOUGH" EQUIPMENT TO COLLOCATE
  - ARGUES: UNDER ACT, "EQUIPMENT" MUST "DRAW POWER" & GENERATE SIGNAL
  - SEE ATTACHED MFN LETTER TO ENFORCEMENT
- SOLUTION: FIND THAT FDF MEETS "NECESSARY" TEST UNDER §251(c)(6)

RULES FOR TRADITIONAL COLLOCATION (cont'd)

- FDFs MEET THE MOST BASIC DEFINITION OF "NECESSARY"
  - PERFORM THE MOST ESSENTIAL FUNCTION OF INTERCONNECTING FACILITIES
    - FCC ACCOUNTING RULES DEFINE AS EQUIPMENT
  - "NECESSARY" BECAUSE WITHOUT THEM, NO SERVICE CAN BE PROVIDED
    - COPPER & FIBER CROSS-CONNECT FRAMES ARE ROUTINELY INSTALLED IN C.O.s NOW
    - HOW ILECs DEPLOY "DARK COPPER"

RULES FOR TRADITIONAL COLLOCATION (cont'd)

- NO BASIS FOR POSITION THAT COLLOCATED EQUIPMENT MUST GENERATE SIGNAL
  - SIGNAL IS GENERATED BY ELECTRONICS AT CUSTOMER PREMISES & IN MFN NODES
  - REQUIRING ADDITIONAL EQIUPMENT IN C.O. INEFFICIENT
    - UNNECESSARY COST
    - CREATES ADDITIONAL POINTS OF FAILURE

RULES FOR TRADITIONAL COLLOCATION (cont'd)

- OPTICAL CROSS-CONNECTS TO COLLOCATED CLECs ARE "NECESSARY"
  - ALLOWS MFN TO BRING SPARE FIBER CAPACITY TO SERVE MULTIPLE CLECs
    - WITHOUT IT, MFN OR CLEC WOULD HAVE TO PULL SEPARATE FIBER INTO C.O. EVERY TIME NEW SERVICE IS NEEDED
    - COST PROHIBITIVE:
      - SINGLE FIBERS MORE EXPENSIVE, USE MORE CONDUIT & LABOR
      - NEED TO DIG UP STREET MULTIPLE TIMES
    - NOT HOW ILEC PROVIDES OWN SERVICE

RULES FOR TRADITIONAL COLLOCATION (cont'd)

2 OPTICAL CROSS-CONNECTS TO COLLOCATED CLECs IN C.O.

- PROBLEM: COURT VACATED FCC's CROSS-CONNECT RULES, REQUIRES NEW APPROACH
- SOLUTION: 3 OPTIONS
  1 FIND CROSS-CONNECTION = ACCESS TO UNEs
  2 DEFINE CROSS-CONNECT AS UNE
  3 PRESCRIBE ILEC CROSS-CONNECT SERVICE

ACCESS TO FIBER BACKBONES

- §250(c)(6) [COLLOCATION] MUST BE INTERPRETED TO GIVE EFFECT TO §251(c)(2) [INTERCONNECTION]
- CLEC ABILITY TO INTERCONNECT WITH COMPETITIVE BACKBONE PROVIDERS AT NATURAL POINTS OF AGGREGATION -- ILEC C.O.s -- MEETS "NECESSARY" TEST

ACCESS TO FIBER BACKBONES (cont'd)

- ABSENT ACCESS TO BACKBONE CARRIERS AT C.O.s, CLECs:
  - ARE FORCED TO CONNECT ONLY TO ILEC, & ARE DENIED EFFICIENT ACCESS TO COMPETITIVE TRANSPORT; OR
  - ARE FORCED TO PULL SEPARATE FIBERS INTO C.O. FOR EACH INTERCONNECTION
    - COST PROHIBITIVE & INEFFICIENT
    - UNNECESSARY STREET DIGGING

ACCESS TO FIBER BACKBONES (cont'd)

- 3 FCC FINDINGS THAT ASSURE EFFICIENT ACCESS TO BACKBONE

1 WHEN CLEC BUYS UNE FROM ILEC & CROSS-CONNECTS TO BACKBONE CARRIER, BOTH ARE ACCESSING UNE

2 THE CROSS-CONNECT IS A UNE (approach taken by Texas PUC)

ACCESS TO FIBER BACKBONES (cont'd)

- 3 FCC FINDINGS (cont'd)

3 MANDATE THAT ILEC MUST PROVIDE CROSS-CONNECT AS A SERVICE, AT COST-BASED RATES

  – PURSUANT TO PRESCRIPTIVE POWER UNDER §201

  – MANDATE TARIFFING IN INTERSTATE TARIFFS, WITH FULL COST SUPPORT

RULES FOR CATT

- MFN HAS NEGOTIATED THIS ARRANGEMENT WITH VERIZON
  - PROBLEM: OTHER ILECs WILL NOT CONSIDER
    - CATT IS A NECESSARY ALTERNATIVE TO TRADITIONAL COLLOCATION IN CASE OF SPACE EXHAUST
  - SOLUTION: FIND CATT MEETS "NECESSARY" TEST AS ALTERNATIVE FORM OF C.O. ACCESS

RULES FOR CATT (cont'd)

- SIMILARLY SITUATED COMPETITIVE TRANSPORT PROVIDERS MUST:
  - COLLOCATE F.D.F. IN CABLE VAULT, UTILITY ROOM, OR OTHER SPACE OUTSIDE COLLOCATION AREA
  - TO ESTABLISH DEMARCATION POINT FROM WHICH COLLOCATED CARRIERS CAN INITIATE SERVICE
    - ENSURES EFFICIENT FIBER DISTRIBUTION IN CASE OF C.O. SPACE EXHAUST
    - CONSERVES HOUSE & RISER CONDUIT

RULES FOR CATT (cont'd)

- CAN IMPLEMENT THESE RULES IN THREE WAYS
  - SOLUTION: 3 OPTIONS

    1 FIND CROSS-CONNECTION = ACCESS TO UNEs

    2 DEFINE CROSS-CONNECT AS UNE

    3 PRESCRIBE ILEC CROSS-CONNECT SERVICE

RULES FOR STABLE MANHOLE ZERO

- REQUIRES ILEC TO COMMIT TO RELIABLE USE OF 2 MANHOLES
  - PROBLEM: MOST COs SURROUNDED BY 10-20 MANHOLES OR MORE
  - ILEC HAS EXCLUSIVE DISCRETION TO SELECT MANHOLE FOR USE BY CLEC
  - MEANS MFN HAS TO TEAR UP STREETS & BUILD TO EVERY MANHOLE
    - TECHNICALLY & ECONOMICALLY IMPRACTICAL

STABLE MANHOLE ZERO (cont'd)

- SOLUTION 1:
  - AMEND COLLOCATION RULES TO ALLOW COLLOCATED CLECs TO SELECT MANHOLE
    - ILEC MUST COMPLY WHERE TECHNICALLY FEASIBLE
  - INCLUDE AS RULE IN COLLOCATION RECONSIDERATION ORDER

STABLE MANHOLE ZERO (cont'd)

- SOLUTION 2:
  - AMEND COLLOCATION RULES TO DEFINE MANHOLE SELECTION AS FORM OF OUT-OF-CO COLLOCATION
    - SIMILAR TO REQUIRING COLLOCATION IN ILEC REMOTE TERMINALS
    - FCC AUTHORITY UPHELD BY D.C. CIRCUIT

WIDESPREAD INDUSTRY SUPPORT FOR MFN

COMMENTS IN CC DOCKET NOs. 98-147 & 96-98:

@Link	Adelphia	Allegiance	Arbros	AT&T
ATG	BTI	CompTel	Conectiv	Covad
CTSI & Waller Creek	e.spire	Fairpointe	Fiber Tech.	Focal
GSA	Intermedia	IntraSpan	KMC	Lightbonding
Mpower	NewSouth	Pathnet	PF.Net	RCN
Rythms	Sprint	Telergy	WorldCom	

ATTACHMENT A

KELLEY DRYE & WARREN LLP
A LIMITED LIABILITY PARTNERSHIP
1200 19TH STREET, N.W.
SUITE 500
WASHINGTON, D.C. 20036
(202) 955-9600

NEW YORK, NY
LOS ANGELES, CA
CHICAGO, IL
STAMFORD, CT
PARSIPPANY, NJ

BRUSSELS, BELGIUM
HONG KONG

AFFILIATE OFFICES
BANGKOK, THAILAND
JAKARTA, INDONESIA
MANILA, THE PHILIPPINES
MUMBAI, INDIA
TOKYO, JAPAN

FACSIMILE
(202) 955-9792
www.kelleydrye.com

DIRECT LINE (202) 955-9664
E-MAIL: jcanis@kelleydrye.com

February 1, 2001

EX PARTE

Magalie Roman Salas
Secretary
Federal Communications Commission
445 12th Street, S.W.
Washington, DC 20554

Re: Written *Ex Parte* Statement of Metromedia Fiber Network Services, Inc.

Deployment of Wireline Services Offering Advanced Telecommunications Capabilities: CC Docket No. 98-147

Dear Ms. Salas:

Pursuant to Section 1.1206(b)(1) of the Commission's rules, enclosed please find two copies of Metromedia Fiber Network Services, Inc. (MFN) *ex parte* letter for consideration in the above-captioned proceeding.

Sincerely,

Jonathan E. Canis
David A. Konuch
Kelley Drye & Warren, L.L.P.
Counsel for Metromedia Fiber Network Services

DC01/KONUD/139005.1

KELLEY DRYE & WARREN LLP
A LIMITED LIABILITY PARTNERSHIP
1200 19TH STREET, N.W.
SUITE 500
WASHINGTON, D.C. 20036
(202) 955-9600

NEW YORK, NY
LOS ANGELES, CA
CHICAGO, IL
STAMFORD, CT
PARSIPPANY, NJ

BRUSSELS, BELGIUM
HONG KONG

AFFILIATE OFFICES
BANGKOK, THAILAND
JAKARTA, INDONESIA
MANILA, THE PHILIPPINES
MUMBAI, INDIA
TOKYO, JAPAN

FACSIMILE
(202) 955-9792
www.kelleydrye.com

DIRECT LINE (202) 955-9765
E-MAIL: jcanis@kelleydrye.com

February 1, 2001

EX PARTE

Frank G. Lamancusa
Market Disputes Resolution Division
Enforcement Bureau
Federal Communications Commission
445 12th Street, S.W.
Washington, DC 20554

Re: Written *Ex Parte* Statement of Metromedia Fiber Network Services, Inc.

Deployment of Wireline Services Offering Advanced Telecommunications Capabilities: CC Docket No. 98-147

Dear Frank:

On behalf of Metromedia Fiber Network Services, Inc. (MFN), we submit this *ex parte* to notify the Commission staff of SBC Telecommunications, Inc.'s ("SBC's") continued refusal to allow MFN to collocate Fiber Distribution Frames ("FDFs") in SBC central offices. As explained in detail below, SBC's continued, anti-competitive refusal to allow collocation has no basis in law and offends the Communications Act. It is our goal that the Enforcement Bureau staff may intercede on MFN's behalf to urge SBC to reverse its position and to grant MFN's collocation applications.

As you know, MFN has been engaged in mediation with SBC under the FCC's auspices since March of 2000. With your valuable assistance, and that of other Enforcement and Common Carrier Bureau staff members, our dispute has been narrowed to a single issue: SBC's refusal to allow MFN to collocate within the SBC Central Office using a fiber distribution frame ("FDF") for the purpose of accessing unbundled network elements in order to provide a telecommunications service.

The dispute concerns situations where MFN provides fiber services over Dense Wave Division Multiplexing (DWDM) or other technologies to its customers.[1] In such cases, MFN typically places the required signal generation equipment at the customer's premises and at MFN's or its customer's facility POP location. When MFN provides its fiber services using ILEC UNEs obtained through collocation arrangements, MFN does not place electronics that light the fiber in the central office collocation space. Rather, MFN collocates a Fiber Distribution Frame, which is the physical termination point of MFN's network, to which the ILEC's loop or interoffice transport UNEs are attached. The FDF does not generate a signal in the central office, nor does it need to. Instead, it merely is a technically feasible point of interconnection where the ILEC UNE is connected to the MFN network. The telecommunications services that MFN provides between the customer premises, the carrier locations, and MFN's POP flow through the Fiber Distribution Frame between or among the points specified by the user of the telecommunications services.

SBC's claimed basis for refusing to permit collocation and interconnection is that a Fiber Distribution Frame is not "equipment necessary for interconnection or access to unbundled network elements" under the Commission's rules. SBC's argument has no basis in the Communications Act, or the Commission's rules and orders, which clearly allow collocation of such equipment.[2] SBC insists that MFN collocate a multiplexer in addition to the FDF before it will grant our collocation application. Lighting the fiber in the central office is wholly unnecessary because the fiber is already lit elsewhere, at the customer's premises. SBC's requirement of additional lighting of this already lit fiber is calculated merely to increase MFN's costs and to delay its network deployment. Although we expect that the Commission's upcoming order in the Advanced Services docket will address this issue explicitly, our goal is to obtain the Commission's help in persuading SBC to grant our collocation applications sooner than that.

MFN has customers it is waiting to serve in SBC's territory. Nothing has changed since we last spoke with you in the Spring of 2000. SBC's failure to grant collocation applications for deployment of FDFs has prevented MFN from serving these customers for more than a year. During that time, other BOCs, namely Qwest and BellSouth, have permitted MFN to deploy FDFs. That Qwest and BellSouth have already agreed to this deployment demonstrates that MFN's position is a reasonable one. Moreover, in the past, SBC has indicated that it *would* allow MFN to collocate an FDF.

SBC itself is on record stating that an FDF *is* equipment that may be collocated. For instance, in a March 9, 2000 letter to MFN's counsel, SBC indicated that MFN would be

---

1 This is a different issue than the one that the parties settled by agreeing to MFN's "stable manhole zero" proposal outlined in previous correspondence. In the scenario that is the subject of the current dispute, MFN intends to directly interconnect and purchase unbundled network elements (UNEs) from SBC in order to provide telecommunications services to customers.

2 47 U.S.C. § 251(c)(6).

entitled to collocation and interconnection under the Act if it "intends to pre-position dark fiber *and collocate fiber distribution frame(s)* in SBC's Central Office(s) to enable MFN to interconnect with SBC's network facilities for MFN's transmission and routing of telephone exchange traffic, exchange access traffic, or both, and/or for MFN to access SBC's unbundled network elements for the provision of telecommunications services by MFN."[3] Similarly, in a March 27, 2000 fax to MFN's counsel, SBC again stated that "*to the extent [MFN] intends to collocate equipment (including fiber and fiber distribution frames)* to interconnect with SBC's network for [MFN's] transmission and routing of telephone exchange traffic, exchange access traffic, or both, and/or to access UNEs so that MFN itself can provide telecommunications services, SBC has been, and remains, willing to negotiate an interconnection agreement."[4]

Given SBC's prior statements, it is simply too late for SBC to deny that a Fiber Distribution Frame is "equipment" pursuant to the FCC's rules and the Communications Act. Nonetheless, SBC's continued intransigence is preventing MFN from serving its customers. MFN has had orders for its services since early 2000 that it cannot fulfil because of SBC's stonewalling. These customers are being denied the promise of advanced services competition that this docket was created to provide. The Commission must take action to ensure that this stonewalling does not continue.

Sincerely,

Jonathan E. Canis
David A. Konuch

cc: Bill Kehoe
Stacy Pies
Thomas Byrnes (MFN)
Robert Riordan (MFN)
Karen Nations (MFN)
Chris Heimann (SBC)

P.S. Pursuant to § 1.1206(b)(1) of the Commission's rules, two copies of this ex parte are being submitted to the Commission's Secretary under separate cover.

---

3 *See* Letter from Christopher Heimann, SBC, to Jonathan Canis and David Konuch, Kelley Drye & Warren, received March 9, 2000 (emphasis supplied).

4 *See* Facsimile Transmission from Christopher Heimann, SBC, to David Konuch, Kelley, Drye & Warren, March 27, 2000 (emphasis supplied).