ShawPittman

A Law Partnership Including Professional Corporations

Bruce D. Jacobs
202.454.7077
bruce.jacobs@shawpittman.com

EX PARTE OR LATE FILED **ORIGINAL**

RECEIVED

APR 10 2001

FEDERAL COMMUNICATIONS COMMISSION
OFFICE OF THE SECRETARY

April 10, 2000

By Courier

Ms. Magalie R. Salas
Office of the Secretary
Federal Communications Commission
445 12th Street, S.W.
Counter TW-A325
Washington, D.C. 20554

Re: ***Ex Parte* Presentations of Pegasus Broadband Corporation; Docket No. 98-206; RM-9147; RM-9245; DA 99-494, DA 00-1841, and DA 00-2134**

Dear Ms. Salas:

At the request of the Office of Engineering and Technology, attached hereto are copies of materials Pegasus Broadband Corporation sent to MITRE regarding Pegasus' proposed MVDDS system. An original and 12 copies of this letter and the attachments are submitted for inclusion in the public record for the above-referenced proceedings. Please direct any questions concerning this submission to the undersigned.

Very truly yours,

Bruce D. Jacobs

Enclosures
cc: James Barker
James Chadwick
Rebecca Dorch
Nathaniel Hardy
Pantelis Michalopoulos
J.C. Rozendaal

No. of Copies rec'd 0+12
List A B C D E

Document #: 1101016 v.1

ShawPittman

A Law Partnership Including Professional Corporations

Tony Lin
(202) 663-8452
tony.lin@shawpittman.com

February 1, 2001

By Federal Express and Electronic Mail

The MITRE Corporation
ATTN: Mr. James W. Marshall, Mail Stop W300
1820 Dolley Madison Blvd.
McLean, VA 22102

Re: MVDDS Demonstration Project

Dear Mr. Marshall:

Attached hereto is the response of Pegasus Broadband Corporation ("Pegasus") to the "Questions for the MVDDS Industry" that MITRE distributed January 24, 2001.

Please note that the response contains certain information which, at least for the present, Pegasus considers to be Confidential Information in accordance with the Unilateral Non-Disclosure Agreement that MITRE signed on February 1, 2001. Pegasus was prepared to submit this response yesterday, on January 31, 2001. At that time, however, Pegasus and MITRE had not yet reached an agreement on the handling of confidential information. Therefore, based on discussions with you yesterday afternoon, we agreed that it would be better to wait until a non-disclosure agreement had been reached.

Please contact the undersigned if you have any questions regarding this response.

Very truly yours,

Bruce D. Jacobs
Tony Lin
Counsel for Pegasus Broadband Corporation

Attachments

TELECOMMUNICATIONS SYSTEMS

1100 17th Street, N.W., Suite 501
Washington, D.C. 20036-4632
(202) 223-4449 □ Fax: (202) 223-4450
E-Mail: rggould@mindspring.com

February 1, 2001

Mr. James W. Marshall,
Principal Engineer
Network and Communications Engineering
The MITRE Corporation
1820 Dolley Madison Blvd.
McLean, VA 22102-3481

Dear Mr. Marshall:

Pegasus Broadband Corporation hereby responds to the "Questions for the MVDDS Industry from The MITRE Corporation" (January 24, 2001).

Pegasus considers its responses to questions 11, 13, and 16 to be proprietary and/or company-confidential. Accordingly, pursuant to the Uniform Non-Disclosure Agreement, MITRE is required to treat these responses and this document as Confidential Information.

Please contact the undersigned if there are any questions regarding our responses.

1. Please provide copies of your original filing with the FCC.

See attached.

2. What range of azimuth angles do you intend to provide service to?

Generally, each transmitting antenna will be directed in a southerly direction, that is at azimuths from 91 to 269 degrees, in order to illuminate only the back of co-channel receivers of other services. However, to minimize the necessity to mitigate interference and where local topography, zoning and property availability permit, the azimuth of transmissions at particular sites will be chosen to point towards the back of all the DBS antennas and as many as possible of the antennas of other protected services in that area.

3. Do you intend to use waveforms identical to those used for DBS systems? If not, please provide details about the waveform, modulation, filtering, etc. Please provide a spectral mask for the transmission.

Transmitted signals under consideration will have a total bandwidth of 500 MHz in the 12.2-12.7 GHz band, and will be composed of individual signal bandwidths ranging from 24 to 500 MHz.

4. What margin do you expect to operate with and what availability do you design to?

The e.i.r.p. of transmissions will be set at the minimum value consistent with the service rules and with the goal of achieving an availability of 99.7% at the maximum range, taking rain climatic zones into account. This implies that the margin may be as high as 7 dB in areas of intense rainfall, and as little as 2 dB in regions of less intense rain. Power control will be used where necessary to control interference

5. What is the typical, minimum, maximum HAAT you expect to use for your transmitting antennas?

The critical height is the height above the highest plane containing, or potentially containing co-channel receivers of other services. A typical height would be 100 meters. A minimum height of 10 meters may be used in those cases where there are no co-channel receivers of other services, or the possiblity of such receivers, within interference range. For example, this would include situations where the MVDDS transmitting site is on the north side of a body of water wide enough so that the closest potentially interfered-with receiver is beyond interference range or where the transmitter is located on a mountain and the closest potentially interfered-with receiver is beyond interference range.

6. What service area radius do you expect to provide? How much will this vary and under what conditions?

Service area radius depends on the location and density of MVDDS subscribers. Pegasus anticipates that a typical service area radius would be 15 kilometers in the southerly direction from the transmitting site. Additional coverage, where necessary, will be achieved by adding transmitting cells. In all cases the minimum e.i.r.p, would be used in order to minimize the need for interference mitigation. The minimum e.i.r.p. for each location will depend on the service area radius and on the terrain.

7. What power levels do you expect to operate at? How will you select a power level for a particular transmitter installation? Do you expect to use any automatic power control?

Power levels depend on the terrain and the possibility of causing interference to DBS and other protected receivers. The maximum e.i.r.p. will not exceed 14 dBW and the minimum e.i.r.p. on the order of 10 dBm. In all cases the e.i.r.p. at a particular location will be determined by the MVDDS service requirements to mitigate interference. Additional transmitting cells, rather than higher e.i.r.p. at a single transmitting site will be used to extend service coverage in an area. Automatic power control may be employed as appropriate.

8. What rain model do you use in your calculations?

ITU-R Recommendation PN.837, "Characteristics of Precipitation for Propagation Modeling".

9. Please provide a copy of your analysis showing why you think interference into DBS receivers will not be a problem. If it is more convenient, point us to the appropriate comments you have provided on the FCC 98-206 and 00-408 documents.

Interference analysis, as understood by Pegasus, requires the definition of a mitigation radius (or zone) within which there is a possibility of causing interference to co-channel receivers of other services, based on the characteristics of their antennas. This mitigation radius is different for each MVDDS site, and depends on the MVDDS antenna height, antenna characteristics (tilt & roll-off) and MVDDS e.i.r.p. to meet MVDDS service objectives. Pegasus would cooperate with MVDDS operators and DBS service providers in that region to determine actual interference that would be caused, and to mitigate that interference.

Pegasus believes that interference can be mitigated if the local MVDDS system is properly designed and operated. For instance, mitigation can be based on use of a larger (better shielded) DBS antenna and/or external shielding. How the mitigation zone is determined and how the mitigation process is implemented are subjects of the present FCC NPRM.

10. Please provide your analysis on rain scatter and its possible impact on interference.

Pegasus believes that rain scatter through common volumes is not significant.

11. What antenna technology do you plan to use at the transmit end?

******* COMPANY-CONFIDENTIAL *******

The required antenna has a broad horizontal beamwidth of the order of 100 degrees and a narrow vertical beamwidth of the order of 20 degrees. For those cases where co-channel receivers of other services are located within about 2 kilometers of the MVDDS transmitting antenna, Pegasus will select the antenna height, sidelobes, tilt, and vertical beamwidth to control the pfd in the vicinity of the MVDDS antenna.

Pegasus believes a variety of conventional and state-of-the-art antennas (and antenna characteristics) will be deployed. Under consideration by Pegasus for transmitting antennas are horns and planar arrays (which are capable of more carefully controlled patterns), both of which have suitable sidelobe characteristics. Generally, antenna sidelobes fall off as the inverse ratio of the normalized beamwidth, raised to some power "n", where n = 2.5 for parabolic antennas, such as those required for the FSS (CFR Part 25.209 uses n = 2.5). Horns and phased arrays will have values of n greater than 2.5. Phased arrays can be designed to have exceedingly sharp sidelobe roll-offs. As a result, ample hardware is available to achieve the desired results of mitigating interference.

******* COMPANY-CONFIDENTIAL *******

12. Do you have specs for your transmit antenna, including backlobe and sidelobe performance? Please provide these. How many different vendors do you expect to use for you transmit antennas? If possible, tell us who they are.

Antenna patterns in the sidelobe region may be described by the exponent "n" as explained above. The actual pattern necessary to mitigate interference depends on the antenna height above the DBS "plane" and will vary from site to site.

13. How would you plan to deal with interference problems that might arise? What technical approaches do you plan to use to mitigate or eliminate these interference problems?

***** COMPANY-CONFIDENTIAL *****

Pegasus will deal with interference in several ways.

First, antennas will be sited to reduce interference to co-channel DBS and other protected receivers.

Second, higher e.i.r.p.s will be used only at elevated transmitting sites remote from the service area; while lower e.i.r.p.s will be used at elevated transmitting sites close to the service area. In each location a minimum e.i.r.p. will be defined that meets the service area requirements and regulatory limits. MVDDS antenna height, antenna sidelobe roll-off, and antenna tilt, will be used to minimize the pfd in the close-in region in which there are or could be, co-channel receivers of other services. The required e.i.r.p. is minimized by a cellular approach employing low e.i.r.p. transmitting sites.

Third: transmitting antenna patterns will be shaped to have low gain at large, negative elevation angles (that is, in directions towards the ground close to the transmitting antenna).

Fourth: Interference reduction devices and techniques will be provided to subscribers of co-channel services in cases of unacceptable interference. For example, better receiving antennas (that is, larger diameter parabolas that could employ highly tapered feed illumination), and external shielding. In particularly intractable cases, interference cancellers employing adaptive filters may be used.

***** COMPANY-CONFIDENTIAL *****

14. Please provide the following documents:

- **Northpoint Petition for Rulemaking, RM-9425, filed March 6, 1998**
- **Northpoint ex parte filing—March 17, 2000**
- **Northpoint ex parte filing—March 23, 2000**
- **Technical Annex to Northpoint March 2, 1999 comments**

Not applicable to Pegasus. Northpoint will provide the listed documents.

15. How will you provide equipment to us for testing? When will it be available?

Pegasus is currently assessing the short-term availability of equipment for use in MITRE's demonstration program.

16. Please provide details on the channelization that you plan to use.

******* COMPANY-CONFIDENTIAL *******

One planned signal would occupy the entire 500 MHz of the 12.2-12.7 GHz band and would consist of a multiplicity of 24 MHz bandwidth signals. An alternative under consideration is the transmission of a single 500 MHz TDM signal.

******* COMPANY-CONFIDENTIAL *******

17. Is an RF (or compatible IF) transmitter available that can be used in a "bench-top" environment for controlled laboratory testing?

Yes, as stated in Question 15 above.

18. Which DBS receivers do you think will be most vulnerable to interference and why? Which DBS receivers do you recommend that we use for testing?

Co-channel receivers of other services with antennas smaller than 60 cm, such the 45 cm DBS antenna will be more vulnerable to interference than larger ones. The siting of such receivers can also make them more vulnerable to interference. For example, those close to an MVDDS transmitting site and receiving multipath signals in or near their main-beam from man-made objects or natural terrain features will be more vulnerable to interference.

The typical 45 centimeter DBS antenna, a consumer product not designed for an interference environment, has substantial sidelobe and backlobe levels. Thus, the interference is a strong function of the direction of the MVDDS interfering signal.

Also, considering the interference as causing a budgeted increase in unavailability, the susceptibility of the DBS receiver to interference is greater in areas of low satellite e.i.r.p. and low rain rates. The satellite pfd over CONUS is different for DirecTV and Echostar satellites. These characteristics must be taken into account at each MVDDS site and must be considered in the individual MVDDS site design.

Sincerely yours,

s/s Richard G. Gould

TELECOMMUNICATIONS SYSTEMS
Engineering Consultants to Pegasus Development Corporation

TELECOMMUNICATIONS SYSTEMS

1100 17th Street, N.W., Suite 501
Washington, D.C. 20036-4632
(202) 223-4449, Fax: (202) 223-4450
E-Mail: rggould@mindspring.com

February 12, 2001

Mr. James W. Marshall,
Principal Engineer
Network and Communications Engineering
The MITRE Corporation
1820 Dolley Madison Blvd.
McLean, VA 22102-3481

CONFIDENTIAL Supplement to Pegasus Response of February 1, 2001

Dear Mr. Marshall:

Pegasus has ordered an MVDDS transmitting antenna that MITRE could use in its demonstration activities, but it is unlikely that the antenna will be available soon enough to be useful. Pegasus therefore suggests that MITRE proceed by modeling the following specifications for Pegasus' system technology. Pegasus may have more specific antenna beam patterns available as soon as the end of this week and will send those to MITRE as soon as they become available.

The Pegasus MVDDS system is designed to co-exist as a secondary service with ubiquitously deployed DBS receivers in the 12.2-12.7 GHz band. The deployment is envisioned to be national in scope, encompassing urban, suburban and rural areas, with the general design parameters cited herein to be optimized for each individual site.

The Pegasus MVDDS system is a low powered, cellular design, with transmitting antennas directing their radiation generally southward, into the backsides of DBS antennas, thereby providing the maximum isolation between the two systems. In areas where there will not be nearby DBS receivers, such as on water or in mountainous areas, the low power cellular approach can be modified to use higher transmitter powers. In areas where DBS receivers can be in close proximity to a Pegasus MVDDS transmitting site (the typical situation), the vertical beamwidth of the transmitting antenna, its height, tilt and sidelobe roll-off pattern, will be controlled in order to limit the PFD in the vicinity of the MVDDS transmitting antenna.

Typical Parameters

Frequency, GHz	12.2-12.7
Transmit Bandwidth, MHz	500
Modulation	QPSK

Peak transmitting eirp, dBm	12.5
Transmitting Antenna Azimuth	Generally southward. Where feasible the azimuth will be the average of the extreme azimuths of the DBS antennas in that region
Transmit Antenna Vert. Beamwidth, deg	16[1]
Transmit Antenna Hor. Beamwidth, deg	110
Transmit Antenna Height, meters	100[2]
Tilt (measured upward), deg	0
Pattern Roll-off	Inversely as the square of the normalized beamwidth
Range	15 Km
Receive Antenna Gain, dBi	34
Receive Antenna Noise Temp, clear sky, K	100

Using the methods being developed via the FCC NPRM (IB Docket No. 00-248, December 14, 2000) the above parameters will define a "mitigation zone" around the MVDDS transmitting antenna within which potentially harmful interference might be received by a DBS antenna. Each DBS receiver within the mitigation zone must then be examined to determine whether harmful interference is actually being received. The FCC proposes a "harmful interference criteria" of 2.86% increase in unavailability for each affected DBS receiver, using the method of computation given in Appendices H and I.

DBS parameters are given by the referenced NPRM or by "Conclusions to Date Regarding Harmful Interference From a Proposed Northpoint Technology Terrestrial System Operating in the DBS Downlink Band, 12.2-12.7 GHz", DirecTV Inc., January 27, 2000. This document provides example link calculations and gives the important sidelobe characteristics of the DBS antennas, see Figures 6.2.1-1a, b, c & d.

A number of situations may arise. First, the propagation path to the MVDDS transmitter may be blocked, resulting in an acceptable level of interference at a DBS receiver. Second, since the DBS antenna has peaky backlobes and front lobes (ref) the gain of the dBS antenna in the direction of the MVDDS transmitter can vary substantially, depending on the azimuth angle to the MVDDS transmitter and the elevation of the DBS antenna. If the DBS antenna is receiving interference in one of its null zones then the interference may be acceptable. Otherwise, mitigation is required. Mitigation may consist of replacing the DBS antenna with a somewhat larger antenna having essentially the same gain and beamwidth, but with the characteristics described in CFR 25.209. Alternatively or in addition, a shield can be mounted near the DBS antenna of the same approximate dimensions as the DBS antenna. The least desirable mitigation technique, because of anticipated consumer resistance, is to relocate the antenna on the consumer's premises, in order to provide increased shielding or blocking. Also, in rural areas, where dwellings are made of wood, the house itself may not be a good shield.

---

[1] With a vertical beamwidth of 16 degrees, the on-axis PFD in the plane 100 meters below the transmitting antenna is controlled out to the 3 dB point, approximately 700 meters. This means that the measured PFD will be essentially constant from 700 meters to 0 meters (at the antenna mast). Reducing the vertical beamwidth will extend the region of PFD control, if necessary.

[2] Height above DBS receivers, or potential DBS receivers, in the vicinity of the transmit antenna.

These parameters establish the interference environment. Line-of-sight conditions dominate. The methods used for the computation of interference are typical of those which are anticipated to be contained in any MVDDS license for any MVDDS system to be built anywhere in the U.S. It is expected that each potential MVDDS operator will submit his mitigation plan to be reviewed by the local DBS Service Providers. The MVDDS operator and the DBS Service Providers then will cooperate in the mitigation process until all issues are resolved. The mitigation zone is defined by calculation identifying those DBS receivers which might receive harmful interference. Mitigation may involve any of the processes cited above once an on-site inspection indicates that there is no blockage between the DBS receiver and the MVDDS transmitter. Measurements are performed only in those cases where the mitigation (by calculation) is in doubt or for unusual circumstances. Thus, Pegasus believes that an analysis of the interference environment is an important first step and perhaps the only step that is needed in order to understand the mitigation issues. A good many more situations can be examined analytically, and special system characteristics and optimizations can be performed; actual measurements are not needed. Thus, the mitigation proposed in the FCC NPRM and by the MVDDS and DBS parties are similar to those which are performed almost every day in the FSS, both nationally and internationally, to evaluate the potential for harmful interference and to mitigate it.

Sincerely yours,

s/s Richard G. Gould

TELECOMMUNICATIONS SYSTEMS
Engineering Consultants to Pegasus Development Corporation

TELECOMMUNICATIONS SYSTEMS

1100 17th Street, N.W., Suite 501
Washington, D.C. 20036-4632
(202) 223-4449 Fax: (202) 223-4450
E-Mail: rggould@mindspring.com

March 7, 2001

Mr. James W. Marshall
Principal Engineer
Network and Communications Engineering
The MITRE Corporation
11493 Sunset Hills Road
Reston, VA 20190

Dear Jim:

This letter supplements the equipment and waveform characteristics provided in our letter dated February 12, 2001.

1. The components and characteristics of the transmitters to be used in the Pegasus MVDDS system include the following.

Codec: for NTSC signal inputs, an MPEG-2 encoder with "look-ahead" statistical multiplexing and clear motion integrated noise reduction, Harmonic, Inc. Sunnyvale, CA, (formerly Divicom, Milpitas, CA), Model "MediaView MV45," or equivalent.

QPSK Modulator/Exciter 70 MHz IF output, with power control, LNR, Hauppauge, NY, Model DVE-70, or equivalent.

Upconverter: (from 70 MHz IF to 12.2-12.7 GHz) LNR, Hauppauge, NY, "M-Series" up converter, or equivalent.

Final Power Amplifier: 12.2-12.7 GHz, 500 MHz bandwidth, solid-state, approximately 30 dB gain, 1 watt rated maximum output power (backed-off as necessary for linearity and to achieve desired e. i. r. p.), with clean-up bandpass filter following final RF SSPA and before output WR-75 flange; from LNR, Hauppauge, NY; or Advantech, Canada; or equivalent.

2. Transmitting Antennas

Patterns and specifications of Seavey Engineering Associates, Models 9749-810 and 9749-800 sectoral horn antennas, both of which are now on order, and which will be used in the Pegasus system are attached. The former, having a 10 degree vertical beamwidth, will be the workhorse of the system permitting reduced e.i.r.p. levels close to the transmitting sites, with a consequent decrease in potential interference to close-in

DBS receivers. The latter antenna, having a 17 degree vertical beamwidth will be used where there are no close-in DBS receiver that could receive interference.

3. Receiving Systems

Subscriber receiving systems in the Pegasus system will have Figures of Merit, G/T, of 15.2 dB/K to permit the use of lower e.i.r.p.s. All other things being equal, lower e.i.r.p.s will result in less interference to DBS receivers in the same area.

4. Transmitted Waveforms

Waveforms of NTSC signals will be identical to current DBS transmissions. Data transmissions will consist of an FDMA stack of individual, equal-power TDM digital bit streams, each carrying a multiplicity of multiplexed data channels. Maximum bandwidth of each bit stream will be 24 MHz. The maximum bandwidth of the aggregate will be approximately 500 MHz.

Sincerely,

Richard G. Gould
Engineering Consultants to Pegasus

Attachment: Antenna patterns

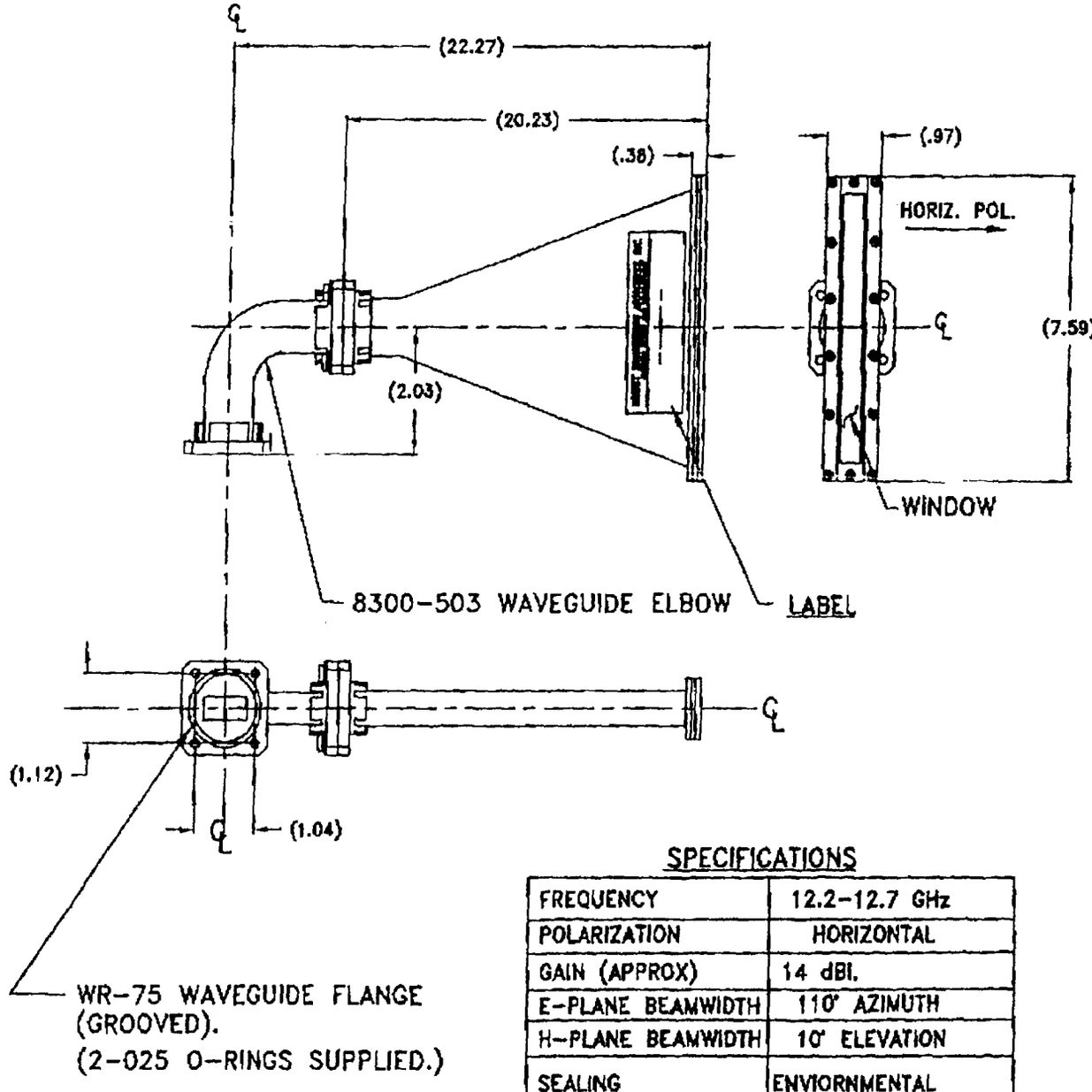

SPECIFICATIONS

FREQUENCY	12.2-12.7 GHz
POLARIZATION	HORIZONTAL
GAIN (APPROX)	14 dBi.
E-PLANE BEAMWIDTH	110° AZIMUTH
H-PLANE BEAMWIDTH	10° ELEVATION
SEALING	ENVIORNMENTAL

NEXT ASSY.	USED ON
	9749-810

FINISH
CHROMATE PER MIL-C-5541
CLASS 1A & WHITE PAINT

MATERIAL
ALUM. 6061-T6
HARDWARE = S.STEEL
WINDOW = .01 LEXAN

REMOVE ALL BURRS AND SHARP EDGES
DO NOT SCALE DRAWING
WORKMANSHIP SHALL BE IN ACCORDANCE WITH MIL-STD-454, REQT 9.

UNLESS OTHERWISE SPECIFIED DIMENSIONS ARE IN INCHES

ANGLES	HOLE DIA TOLERANCES	LINEAR
±1°	.0135-.250 +.005 -.001	.X = ±.06
	.251-.500 +.006 -.001	.XX = ±.02
	.501-1.000 +.010 -.001	.XXX = ±.010

DRAWN	WPMc	DATE 4-4-00
CHECKED		DATE
MFG ENG		DATE
ENG DEPT		DATE
MFG DEPT		DATE 4/6/00
QA DEPT		DATE

SEAVEY ENGINEERING ASSOCIATES INC.
CONCORD, MA 01742

DRAWING TITLE
H-PLANE
SECTORAL HORN

SIZE	CAGE CODE	DWG NO.	REV
A	60173	9749-810	A

SCALE NONE WT SHEET 1 OF 1

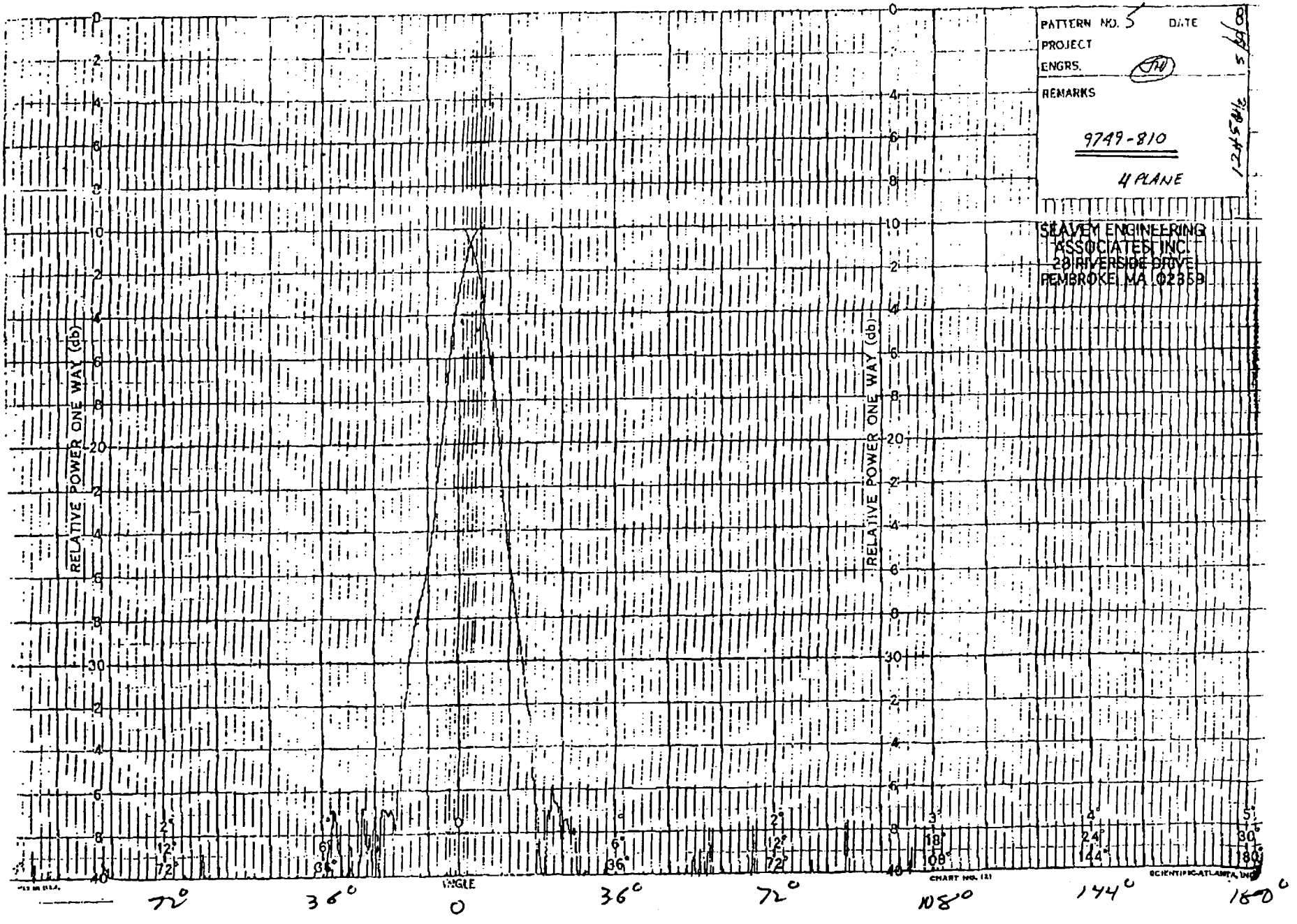
PATTERN NO. 5
DATE
PROJECT
ENGRS.
REMARKS
9749-810
4 PLANE
SEAVEY ENGINEERING ASSOCIATES, INC.
28 RIVERSIDE DRIVE
PEMBROKE, MA 02359
RELATIVE POWER ONE WAY (db)
0
2
4
6
8
10
20
30
40
2°
12°
72°
6°
36°
0
6°
36°
2°
12°
72°
3°
18°
108°
4°
24°
144°
5°
30°
180°
ANGLE
CHART NO. (2)
SCIENTIFIC-ATLANTA, INC.
72°
36°
0
36°
72°
108°
144°
180°

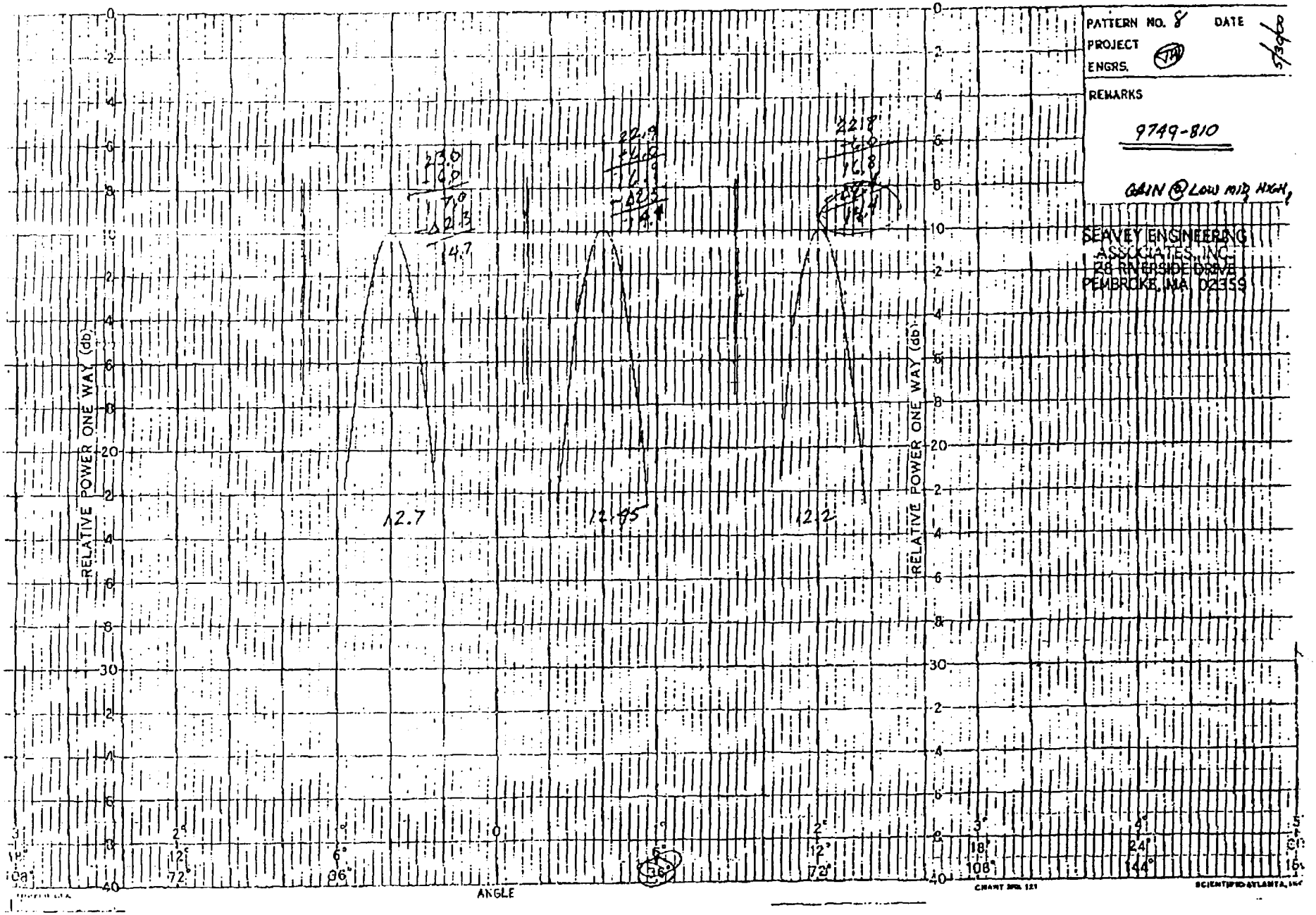
PATTERN NO. 8
DATE 5/30/00
PROJECT
ENGRS.
REMARKS
9749-810
GAIN @ LOW MID HIGH
SEAVEY ENGINEERING ASSOCIATES, INC.
28 RIVERSIDE DRIVE
PEMBROKE, MA 02359
RELATIVE POWER ONE WAY (db)
ANGLE
12.7
12.45
12.2
23.0
22.9
22.8
14.7
16.8
CHART NO. 121
SCIENTIFIC-ATLANTA, INC.

SEAVEY ENG ASSOC.
02/20/01 MON 09:52 FAX 781 829 4590
009

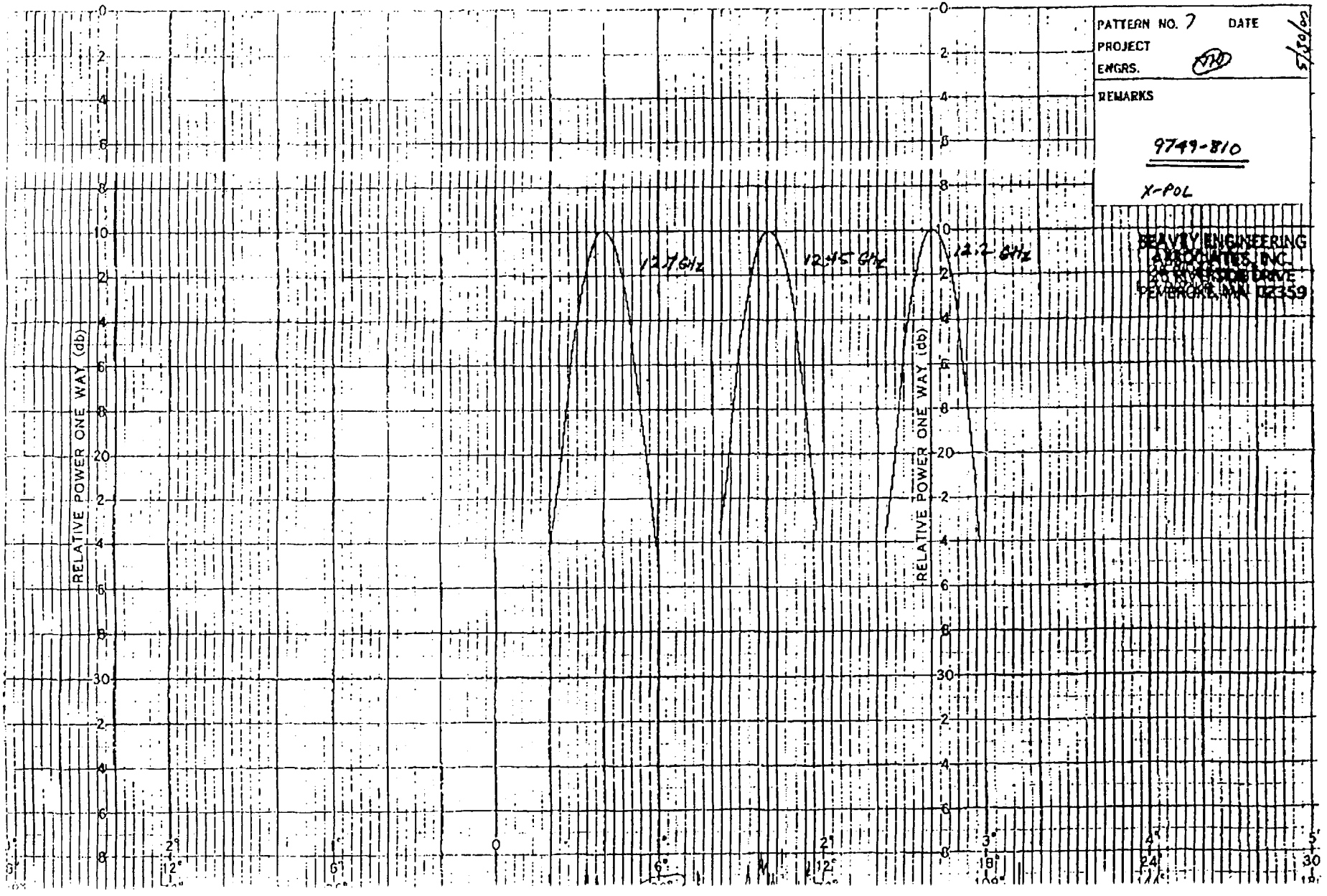

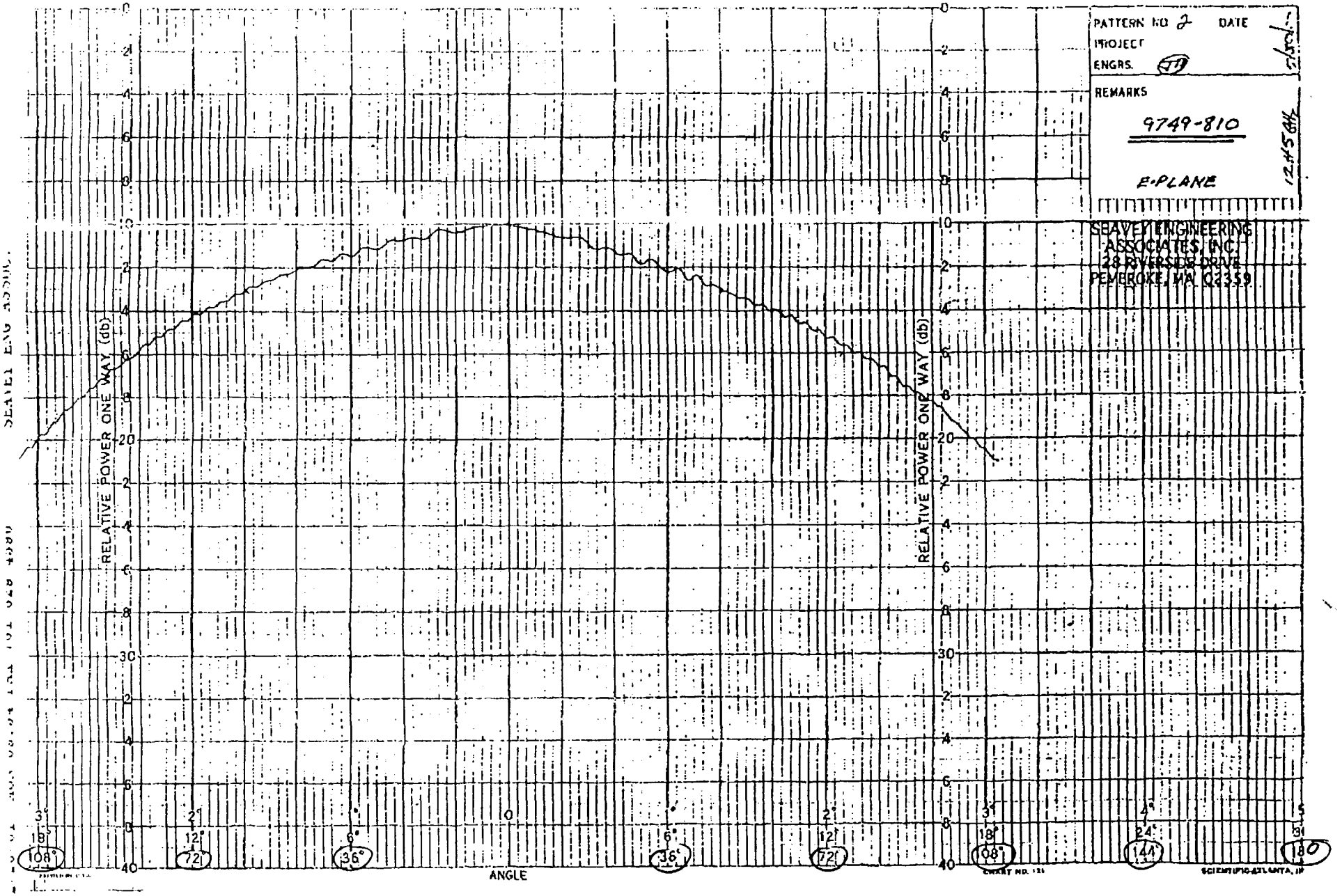
PATTERN NO 2 DATE
PROJECT
ENGRS.
REMARKS
9749-810
E-PLANE
12.45 GHz
SEAVEY ENGINEERING ASSOCIATES, INC.
28 RIVERSIDE DRIVE
PEMBROKE, MA 02359
RELATIVE POWER ONE WAY (db)
ANGLE
3° 18° 108°
2° 12° 72°
6° 36°
0
6° 36°
2° 12° 72°
3° 18° 108°
4° 24° 144°
5° 30° 180
SCIENTIFIC-ATLANTA, INC.

2964	A	ORIGINAL	WM	8-29-97	
2982	B	REMOVED LENS	WM	9-29-97	

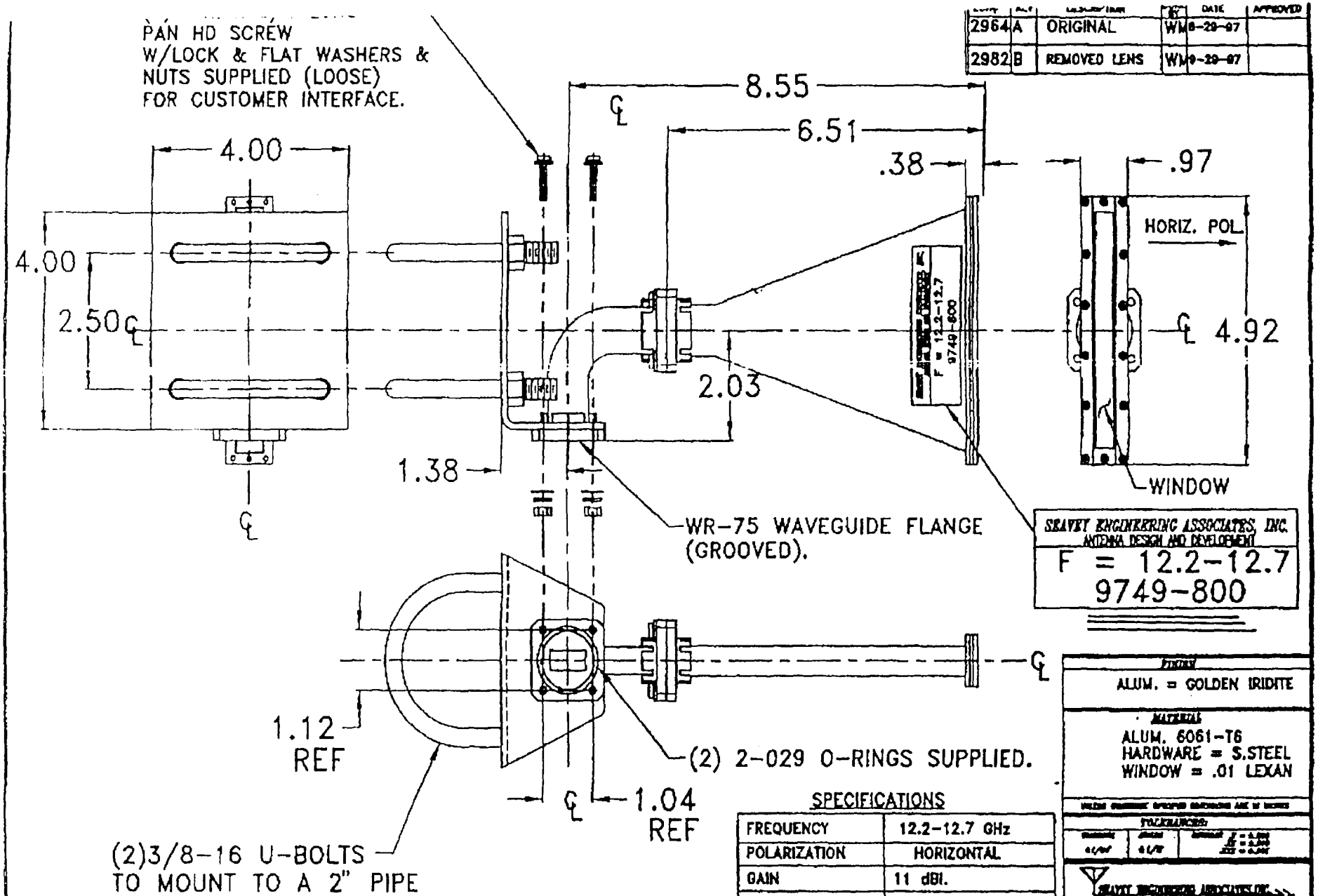

SEAVEY ENGINEERING ASSOCIATES, INC.
ANTENNA DESIGN AND DEVELOPMENT
F = 12.2-12.7
9749-800

SPECIFICATIONS

FREQUENCY	12.2-12.7 GHz
POLARIZATION	HORIZONTAL
GAIN	11 dBi.
HALF POWER BEAMWIDTH	≈110° AZIMUTH ≈17° ELEVATION
SEALING	ENVIORNMENTAL
FOR TEST REPORT REFER TO 9749-700	

PRELIMINARY NEEDS SIGNATURES

FINISH
ALUM. = GOLDEN IRIDITE

MATERIAL
ALUM. 6061-T6
HARDWARE = S.STEEL
WINDOW = .01 LEXAN

TOLERANCES:

SEAVEY ENGINEERING ASSOCIATES, INC.

TITLE
H-PLANE
SECTORAL HORN

DRAWN	WPMc	8-29-97
CHECKED		
ENGRG APPD		
Q.A. APPD		

SIZE	FSCM NO.	DWG NO.	REV
A	60173	9749-800	B

SEAVEY ENG ASSOC.
02/20/01 MON 09:25 FAX 781 829 4590

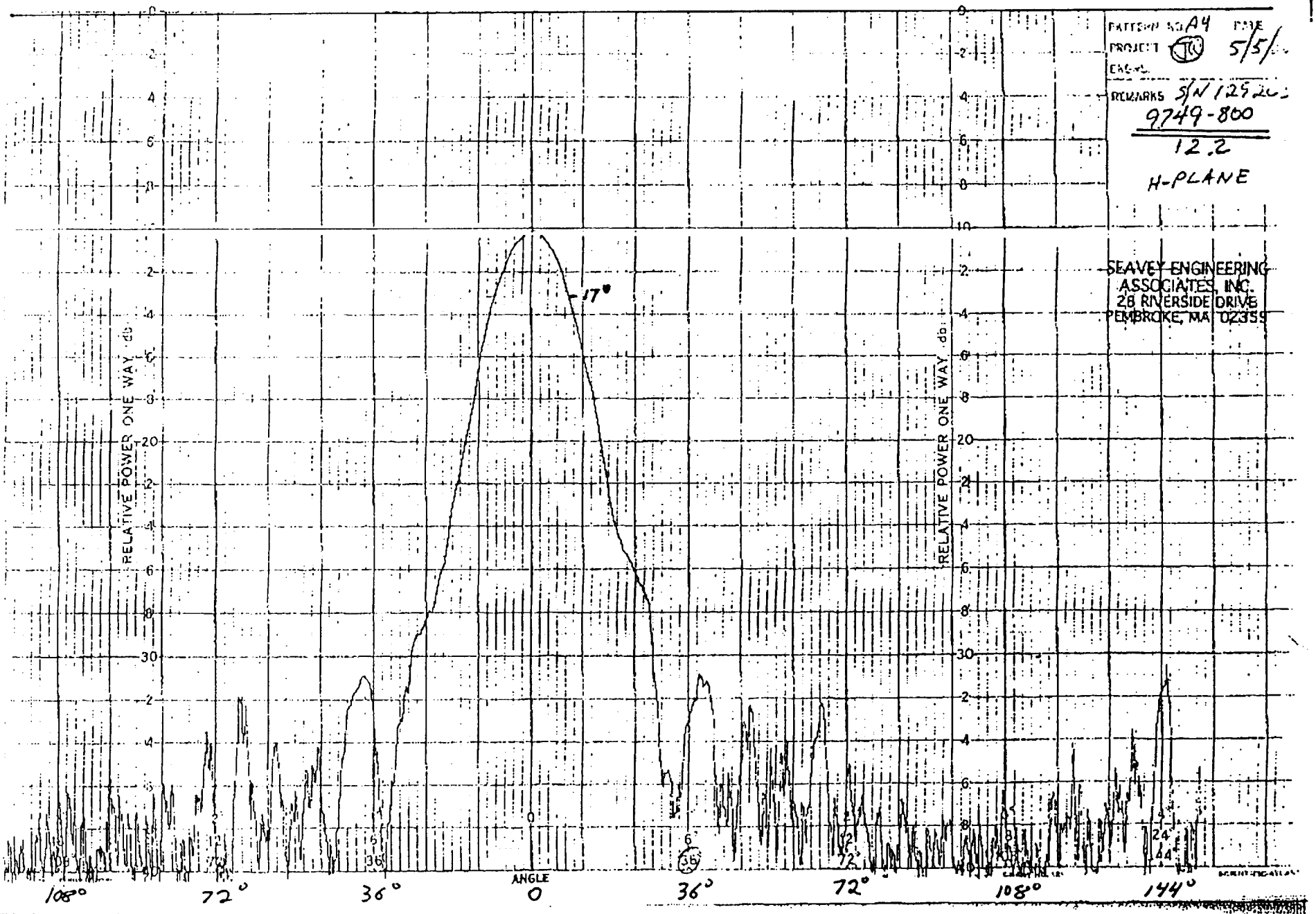
PATTERN NO. A4
DATE 5/5/
PROJECT
ENGR.
REMARKS S/N 125 20
9749-800
12.2
H-PLANE
SEAVEY ENGINEERING ASSOCIATES, INC.
28 RIVERSIDE DRIVE
PEMBROKE, MA 02359
RELATIVE POWER ONE WAY, db
-17°
ANGLE
108°
72°
36°
0
36°
72°
108°
144°

MODEL 9749-800

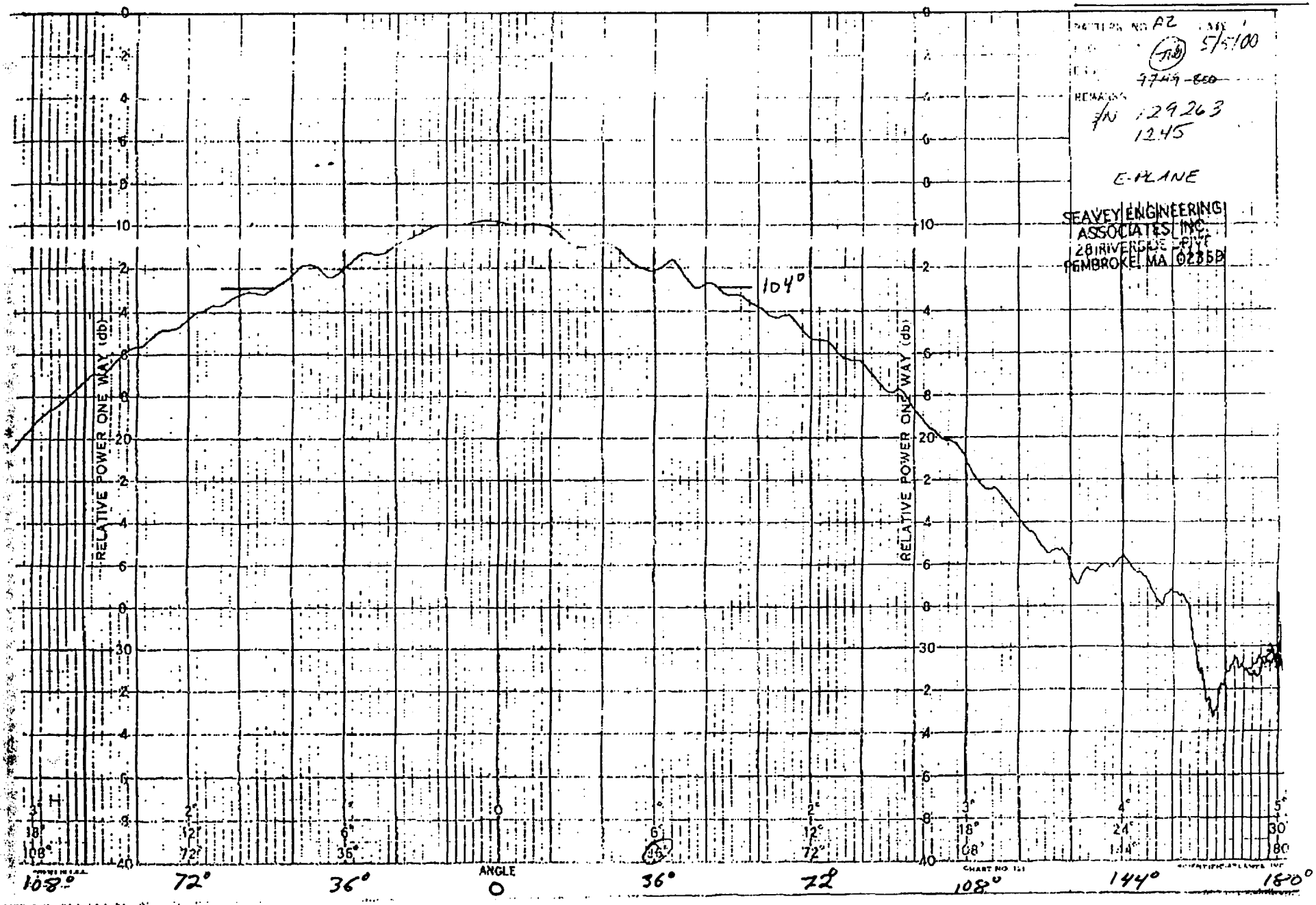

ShawPittman

A Law Partnership Including Professional Corporations

Bruce D. Jacobs
202.454.7077 Alt: 202.663.8077
bruce.jacobs@shawpittman.com

March 15, 2001

James W. Marshall
Principal Engineer
Network and Communications Engineering
The MITRE Corporation
1820 Dolley Madison Boulevard
M/S W650
McLean, VA 22102-3481

Dear Mr. Marshall:

To facilitate the use of all the information previously provided to MITRE by letter and in meetings describing the design of the Pegasus system and the characteristics of its sub-systems and the components and equipment be used, Pegasus Broadband Corp. hereby agrees to remove the Company-Confidential and Company-Proprietary designations from that material. MITRE now may use that information for testing and analysis, and in its report to the FCC.

We understand that this letter, and the statements herein are sufficient to eliminate any concerns that MITRE may have had concerning the earlier requests for confidentiality. If that is not the case, please let us know immediately explaining any views to the contrary.

Very truly yours,

Bruce D. Jacobs
Counsel to Pegasus Broadband Corp.

cc: John K. Hane
Richard G. Gould

TELECOMMUNICATIONS SYSTEMS

1100 17th Street, N.W., Suite 501
Washington, D.C. 20036-4632
(202) 223-4449 Fax: (202) 223-4450
E-Mail: rggould@mindspring.com

April 6, 2001

Mr. James W. Marshall
Principal Engineer
Network and Communications Engineering
The MITRE Corporation
11493 Sunset Hills Road
Reston, VA 20190

Dear Jim:

This letter will confirm the information I gave you by telephone this morning on the G/T, the Figure of Merit, for the receivers of the Pegasus MVDDS system.

The overall G/T will be 15.2 dB/K. That figure results from the use of a 67 cm offset-fed dish antenna with 65% efficiency, resulting in a Gain of 36.8 dB_i , followed by an 80K LNB attached directly to the feed.

The total system noise temperature will be no higher than 145K, based on the following assumptions and calculations:

Total antenna noise temperature, T_a, is approximately:

$$= \varepsilon T_{sky} + 0.5(1-\varepsilon)T_{sidelobes} + 0.5(1-\varepsilon)T_{earth}$$

where ε is the beam efficiency, about 95% with tapered illumination.

Sky noise temperature, T_{sky}, is about 45K at 12 GHz, at an angle of elevation of 5 degrees; and T_{earth} is 290K. Taken together, the overall antenna temperature is about 55K. Another 10 kelvin will be added to take account of all other possible losses. Thus the maximum system noise temperature will be 80 K, plus 55K, plus 10, giving an overall maximum system noise temperature of 145K.

Therefore, G/T, the figure of merit, will be 36.8 - 21.6 = 15.2 dB/K.

Please call me if you have any questions.

Sincerely,

R G Gould

Richard G. Gould
Engineering Consultants to Pegasus Development Corporation