their spectrum efficiently, without the additional need for these licensees to obtain individual authorizations for each site.

It is envisioned that, in a corridor/ribbon system, DSRC networks could be deployed incrementally with safety benefits provided by roadside equipment ("RSE") at a cost of not more than $1,000 per RSE.

The construction rules for DSRC operations should promote early deployment of the systems. Single site licensees should be required to construct and become operational within twelve months of the license grant date. Although ribbon and corridor licensees may be provided an extended construction period, annual benchmarks and reporting requirements should be met. In the event that a portion of the DSRC band is licensed by geographic region, those licensees should be subject to annual benchmarks expressed in terms of transmitter density (*i.e.*, number of transmitters per highway mile). Finally, the license and renewal terms for operation of a DSRC service, which require a license, should be consistent with the license terms permitted other services operating in Part 90 of the Commission's Rules.

IV. TECHNICAL ISSUES

ITS America provides the Commission with a range of options with respect to some of the technical issues that are currently being discussed by the ASTM standards writing group, and which the Commission can utilize as a foundation for developing a record in a rulemaking proceeding concerning this subject. The discussion that follows concerns the various options available for Power Limits, Emission Masks, Frequency Stability, Spectrum Sharing and Interference Mitigation.

A. Power Limits

In the *Report & Order*, the Commission adopted the following power requirements for DSRC operations in the 5.850-5.925 GHz band:

> The peak transmit output power over the frequency band of operations shall not exceed 750 mW or 28.8 dBm with up to 16 dBi in antenna gain. If transmitting antennas of directional gain greater than 16 dBi are used, the peak transmit output power shall be reduced by the amount in dB that the directional gain of the antenna exceeds 16 dBi, *i.e.*, the device's maximum EIRP shall not exceed 30 W EIRP. However, the peak transmitter output power may be increased to account for any line losses due to long transmission cables between the transmitter and the DSRCS device's antenna, provided the EIRP does not exceed 30 W.[39]

This has generally been accepted as sufficient for the applications currently being discussed. However, power at this limit will only be used for DSRC roadside equipment where the transmitter is located remotely from the antenna (or antennae) or for some safety applications at their range limit. The majority of devices will usually operate at much lower power levels than this limit. Therefore, a range of RSE and on-board (in-vehicle) equipment ("OBE") performance categories is being considered to allow different rules to be applied to the various types of uses.

The performance categories and power limit ranges discussed below are: (1) RSE Category A (low power); (2) RSE Category B (medium power); (3) RSE Category C (higher power); (4) OBE Category A (low power); and (5) OBE Category B (higher power). Designations of the specific limits in each category are being investigated.

1. RSE Category A

Category A RSE could be considered for unlicensed or licensed by rule operation in the channels or time slices assigned to private applications. The extremely short range of some private applications could enable the over-the-counter-sale of RSE/OBE sets similar to FM

---

[39] *Report & Order*, 14 FCC Rcd at 18232.

family radios. They could be used for computer program, map, music and data downloads in the family garage and other applications. The small communication zones created by the low power RSE, directional antennas, at least two available channels, and a packet collision resistant MAC level protocol would prevent interference between similarly categorized locations or with other applications using higher category equipment.

2. RSE Category B

Category B RSE would be used by the majority of DSRC applications and in most DSRC channels. These RSE would also be used in the channels assigned to private as well as public safety operations. RSE of this power level would require licensing, and may be used generally by corporations to conduct business operations. The physical separation between drive through operations, parking operations or other vehicle driveways, directional antennas, at least two available channels and a packet collision resistant MAC level protocol would prevent interference between locations.

3. RSE Category C

Category C RSE would be used for public safety applications that operate at extended DSRC ranges or at the range requirement limit of 1000 m. These RSE would operate in a limited number of DSRC channels. RSE of this power level would require licensing. The channel separation would prevent interference with other types of DSRC applications. Physical separation between applications or time sharing protocols would prevent interference between applications in the same channel.

4. OBE Category A

Category A OBE would be used by the majority of DSRC applications and in most DSRC channels. These OBE would also be used in the channels assigned to private as well as

public safety operations. OBE of this power level would not require licensing because they would only be used in the presence of an RSE requesting communication. The physical separation between drive-through operations, parking operations, or other vehicle driveways, in addition to directional antennas, multiple available channels, and a packet collision resistant MAC level protocol would prevent interference between locations.

5. OBE Category B

Category B OBE would be used for public safety applications that operate at extended DSRC ranges or at the range requirement limit of 1000 m. These OBE would operate in a limited number of DSRC channels. OBE of this power level could be licensed by rule. The channel separation would prevent interference with some DSRC applications and time sharing protocols would prevent interference between applications in the same channel.

B. Emission Mask

In the *Report & Order*, the Commission adopted "the emission mask requirements of Section 90.210(k) for DSRC operations in the 5.9 GHz band."[40] This has generally been accepted as sufficient for the emission mask at the band edges except as commented on by Mark IV Industries, Ltd. in its petition for reconsideration. However, the emission mask used in the channels will vary according to the category of RSE in use. The concept under consideration is a channel edge emissions requirement that is sufficiently low to prevent interference between applications. This will result in different emission masks for each category of RSE or OBE based on the maximum power allowed in each category. The form of the emission mask will be a specified attenuation number from the maximum allowed for the category of equipment at

---

40 *Id.* at 18233.

specific offsets from the channel center frequency. These emission masks are under development.

C. Frequency Stability

The frequency stability requirement for DSRC is generally being driven by an attempt to use RF parts in common with other commercially available devices that operate in the 5 to 6 GHz range where possible and meet the bit error rate requirements of DSRC. The general range of options at this point includes: 1, 5, 10, 15, 20 and 25 ppm for the RSE; and 20, 30, 50, and 100 ppm for the OBE. The selection process is still underway.

D. Spectrum Sharing and Interference Issues

The current concepts for sharing the spectrum among applications and preventing interference include space, frequency, and time division of message transmissions. Some techniques separate application presence announcements and short message sequence application operations from longer application operations by channel and then separate application messages into specified time slots. Other techniques provide specific channels for public safety applications in the lower end of the range capability, different channels for private and commercial applications in the lower end of the range capability, and other channels for public safety applications that operate up to the DSRC range limit. Each method is expected to use both TDMA (Time Division Multiple Access) and CSMA (Carrier Sense Multiple Access) protocols to minimize packet collisions.

The possibility of establishing a limit on the emissions from an RSE antenna, at angles above those that are required to implement communications with the OBE, is also being considered to minimize interference between short-range applications. This limit would have the form of a specific number of dBm above a specific antenna pattern angle (referenced to a vertical

arrow pointing into the ground). Some of the values being considered are 0 dBm above 70 degrees, 5 dBm above 70 degrees, 0 dBm above 80 degrees and 5 dBm above 80 degrees. This would ensure that all licensed users in short range installations would use directional antennas to maximize the signal level in the desired and licensed communication zone and minimize interference to their neighbors. License applications and frequency assignments may be coordinated through a frequency coordinator in order to maintain enough channel separation to eliminate any potential for interference.

This method would insure non-mutual exclusivity for all potential private short-range users, and minimize any interference potential with co-primary fixed satellite users. Unlicensed users would already be transmitting at powers at or below these limits, and would not be able to interfere because the Carrier to Interference ratio (C/I) of any of the proposed techniques at short range would overcome any nearby unlicensed device emissions.

It is also being considered to require medium range private users to adhere to a maximum interference level at any nearby co-channel DSRC RSE not licensed by the same private user. Interference limits being considered are –100 dBm, -90 dBm, and –80 dBm for RSE sensitivities of –75 dBm and OBE sensitivities of –60 dBm. For those techniques that are not self-coordinating, it is recommended that a frequency coordinator process applications for licenses and assign frequencies in the private application channels. It is also proposed to authorize licensed private users one channel per site and allow the user to install multiple devices, if required. Private users are expected to use TDMA and CSMA protocols to prevent interference between multiple devices on the same channel.

Public Safety applications generally operate at longer ranges than private operations and would not be able to implement interference limiting methods. Public Safety applications could

be licensed by a frequency coordinator to use specific public safety channels and location separation to prevent interference if not using a self-coordinating technique. For those Public Safety applications that are portable (*i.e.* variable message signs), the DSRC protocol will prevent interference by using a message collision avoidance technique. Public agencies are expected to use TDMA and CSMA protocols to prevent interference between multiple devices authorized by the same license.

V. CONCLUSION

As reflected in this Status Report, since the release of the October 1999 *Report & Order*, there has been substantial progress among ITS stakeholders on the service rules. ITS America is committed to continuing its efforts to build consensus and promote industry standardization. ITS America requests that the FCC seek comment on the issues addressed in this Status Report and, based upon the record compiled, thereupon proceed expeditiously with a Notice of Proposed Rulemaking promulgating service rules for the DSRC spectrum allocation.

Respectfully submitted,

By: _____

John J. Collins
CEO & President
Intelligent Transportation Society of America
400 Virginia Ave., S.W.
Suite 800
Washington, D.C. 20024-2730
(202) 484-4847

Of Counsel:
Robert B. Kelly
Benigno E. Bartolome
Squire, Sanders & Dempsey, LLP
1201 Pennsylvania Ave., N.W.
Post Office Box 407
Washington, D.C. 20044-0407
(202) 626-6600

October 6, 2000

APPENDIX A

5.9GHz Stakeholders Workshop for ITS Applications

December 16-17, 1999
Washington, DC

The enclosed information will serve as background for the drafting of program advice to the U.S Department of Transportation, in fulfillment of ITS America's role as an official utilized Federal Advisory Committee. The advice will be reviewed, modified, and approved by ITS America's Coordinating Council and Board of Directors prior to submission to the U.S. Department of Transportation.

5.9GHz Stakeholders Workshop for ITS Applications

Table of Contents

1. Workshop Announcement
2. Agenda
3. Conclusions
4. Proceedings
5. Presentations
6. White paper: Alternative Technologies to DSRC
7. Comments for the record
8. Attendee list

INTELLIGENT TRANSPORTATION SOCIETY OF AMERICA

400 Virginia Ave., S.W., Suite
Washington, D.C. 20024
(202) 484-4847 FAX (202) 484
http://www.itsa

5.9GHz STAKEHOLDERS WORKSHOP ANNOUNCEMENT

On behalf of the Coordinating Council and Board of Directors of ITS America, I am pleased to announce a Stakeholders' Workshop, sponsored by ITS America's Special Task Force on 5.9 GHz Policy. **The workshop is scheduled for December 16-17 in Washington, DC at ITS America.**

As you are probably aware, the Federal Communications Commission recently set aside 75 MHz of spectrum in the 5.9 GHz band for ITS applications. The principal responsibility of the Task Force is to provide advice to the U.S. Department of Transportation on the role U.S. DOT should take in helping the ITS industry take appropriate advantage of this spectrum, including but not limited to support for the development of standards in this area.

To develop its recommendations, the Task Force is inviting industry stakeholders to present their viewpoints and take part in discussions on current and potential uses for this spectrum, the current state of the art, and the relative merits of other technical alternatives. Stakeholder presentations will take place on Thursday, December 16th. The morning of December 17th will be devoted to an open discussion of the technical, business, and institutional issues surrounding the 5.9 GHz allocation. Following the workshop, the Task Force will meet to develop its preliminary recommendations, based on the presentations and discussion of the preceding day and a half.

We are asking each participant to pay a registration fee of $60 to help us cover costs for food and meeting materials. If you are able to participate in the workshop, **please complete and return the accompanying registration form no later than December 9, 1999 to Katrina Mayo**. Space at the workshop is extremely limited, and ITS America reserves the right to manage attendance in order to assure broad and balanced representation at the workshop.

Thank you for your interest and support. If you need additional information about the workshop or the Task Force, please contact Steve Keppler at ITS America, (202) 484-4662 or skeppler@itsa.org.

Sincerely,

John Collins
President & CEO

5.9GHz Stakeholders Workshop for ITS Applications

December 16-17, 1999

Holiday Inn Capitol, Washington, DC

Agenda

Day 1

8:00-8:30 ***Continental Breakfast***

8:30-8:45 ***Welcome and Purpose***
John Collins, President & CEO, ITS America

8:45-3:00 ***Application sessions***
Rick Weiland, Facilitator

Topics

5.9 GHz User Requirements (8:45-9:15)
Speaker: Broady Cash, ARINC

Financial/Toll (9:15-10:15)
Speakers: Ben Bates, Equiva Services; Neil Schuster, IBTTA; Rena Barta, E-ZPass; James Bucklar, Texas Instruments

Security & Access (10:15-10:45)
Speakers: Virginia Williams, Security Industry Association; Sam Oyama, Hitachi

Break (10:45-11:00)

Information (11:00-11:50)
Speakers: Sheldon Leader, Edwards & Kelcey; Arlan Stehney, IDB Forum; Bart Stevens, Smartmove

Lunch on your own (11:50-1:00)

Control (1:00-1:50)
Speakers: Steve Shladover, PATH; Mike Duoos, 3M; Guy Rini, Mack Trucks

Fleets (1:50-3:00)
Speakers: Don Soults, Truckstops; Joe LoVecchio, Transit; Howard Moody, AAR; Bob Luminati, Landstar

Break (3:00-3:15)

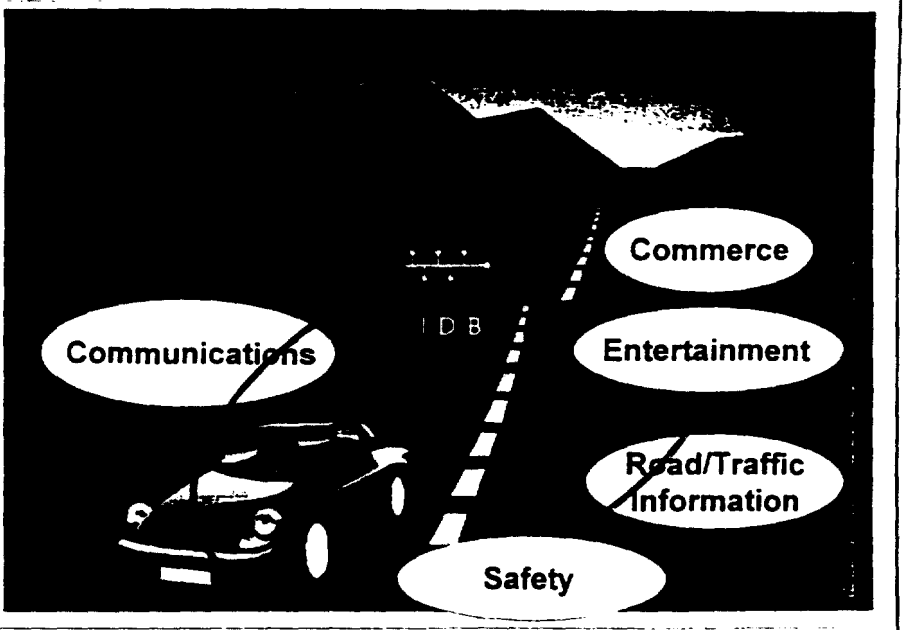

Solution: the ITS Data Bus

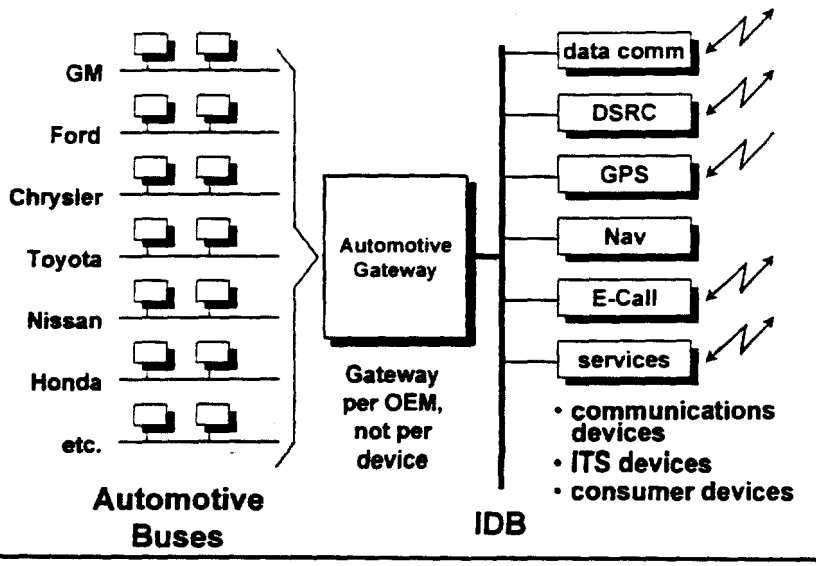

without broadly installed DSRC technology.

The second prerequisite is the existence of a well-accepted industry standard, consensus or de facto, for DSRC at 5.9 GHz.

Even if these prerequisites are met, it is likely that other technical interests, with alternative approaches to IV communications, would oppose such rule making.

DSRC standards needed rapidly; consortium has been proposed

9. Industry proponents of DSRC at 5.9 GHz are therefore under a significant onus to move forward at high speed toward a DSRC standard at 5.9 GHz. DSRC vendor representatives have proposed the formation of a vendor consortium to rapidly develop the relevant standard specifications and to promote the use of DSRC to the developers and deployers of applications using VI communications, notably including vehicle manufacturers.

Recommend that Consortium move ahead

10. Recommendation to DSRC technology vendors: To form a consortium to work toward the rapid development and delivery of a standard 5.9 GHz DSRC specification by late spring 2000, preferably one which encourages an open development environment that will help to enable to the broadest possible set of applications.

Recommend that U.S. DOT encourage work of Consortium

11. Recommendation to U.S. DOT: To support the work of such a consortium to prepare a suitable standard specification by late spring 2000, to the extent of:

    - Providing the services of an FCC Consultant (on such issues as band use, channelization)
    - Providing the services of a data security consultant (encryption requirements)
    - Providing the services of a standards editorial contractor (all layers)
    - Supporting common needs testing related to DSRC at 5.9 GHz:
      + Environmental – ice, snow, slush, sand, dirt, dust
      + Performance evaluation – 802.11 protocol, modulation (BPSK, QPSK, other)
      + Validate existing IEEE 1455 Layer 7 standard for use at 5.9 GHz
      + Validate new standards for Layers 1 and 2

Recommend that U.S. DOT initiate public comment on DSRC mandate

12. Recommendation to U.S. DOT: To initiate public comment, potentially leading to rulemaking on the inclusion in all new vehicles of an industry-standard DSRC transponder at 5.9 GHz. Such a process would be terminated without action if such a standard specification were not in place by mid-2000. It is suggested that U.S. DOT develop, for inclusion in the request for public comment, a draft set of criteria by which to evaluate the appropriateness of IV communications alternatives, including DSRC at 5.9 GHz. It is suggested that these criteria focus first

IDB & DSRC Enables...

- Applications in the vehicle:
  - wireless Internet access in the vehicle
  - remote vehicle diagnostics
  - bridges to other components
  - security / authentication for e-commerce
- Data/Control access through the Gateway
  - read/transmit diagnostic information
  - read/transmit vehicle / sensor information
  - audio access to vehicle entertainment radio
  - display arbitrary text on in-dash message center
  - receive steering wheel button inputs from driver
  - operate vehicle functions (lower antenna, etc.)

IDB-C and IDB-M

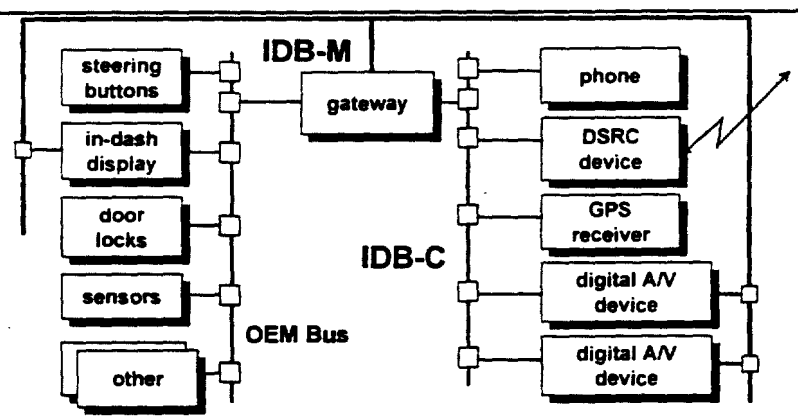

Staged deployment - as costs come down, migrate to IDB-M
Low cost devices may stay on IDB

MY2002/3 MY2005/6

IDB-C

IDB-M

IDB-C to IDB-M

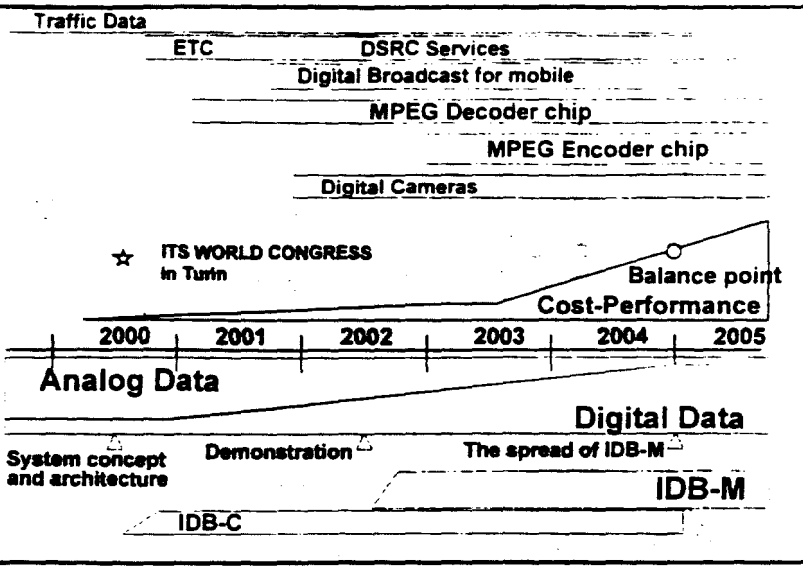

IDB Standardization

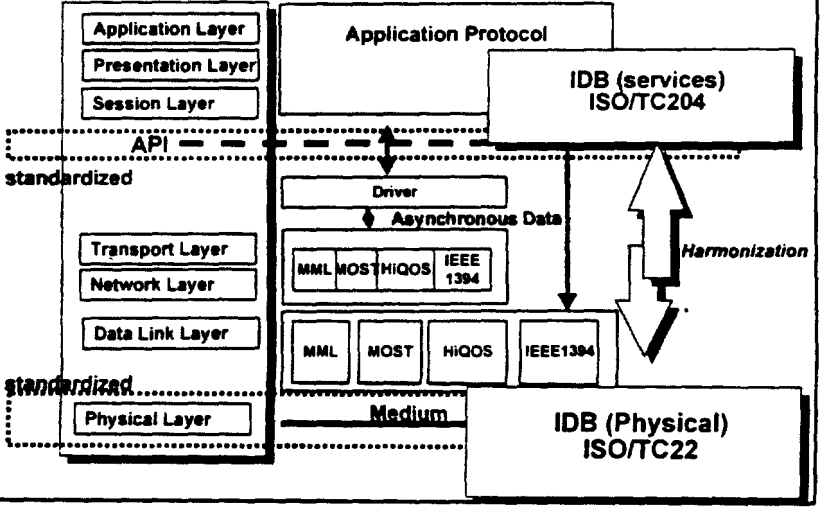

IDB Data Rates

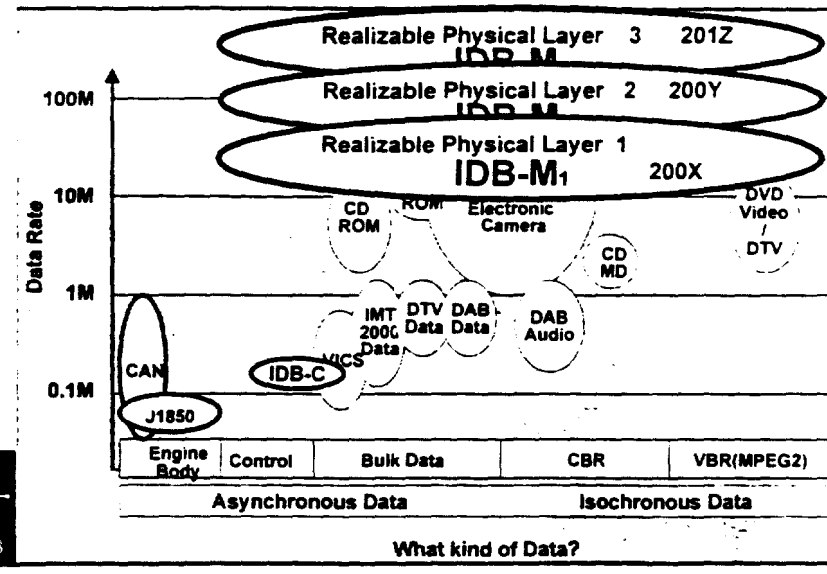

IDB Pavilion Technology Demonstration

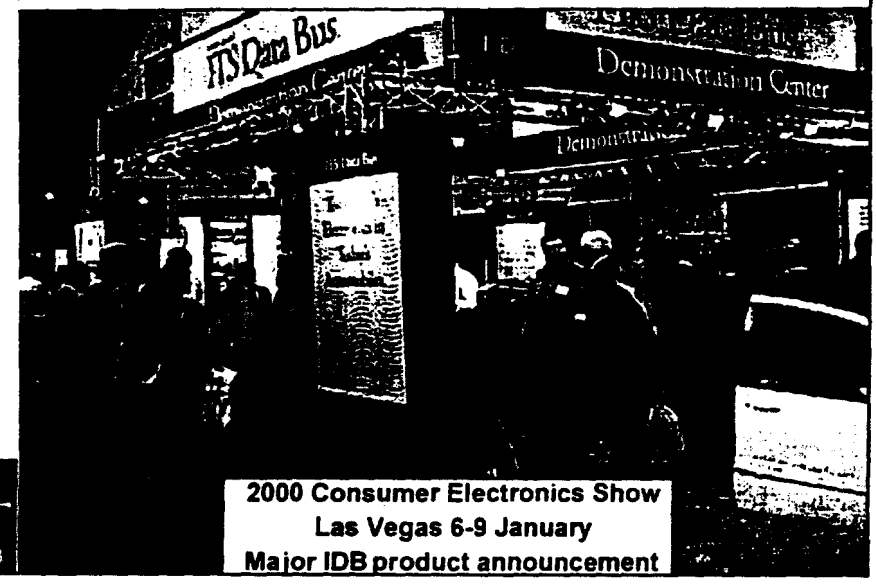

2000 Consumer Electronics Show
Las Vegas 6-9 January
Major IDB product announcement

Lincoln LS Demonstration Vehicle

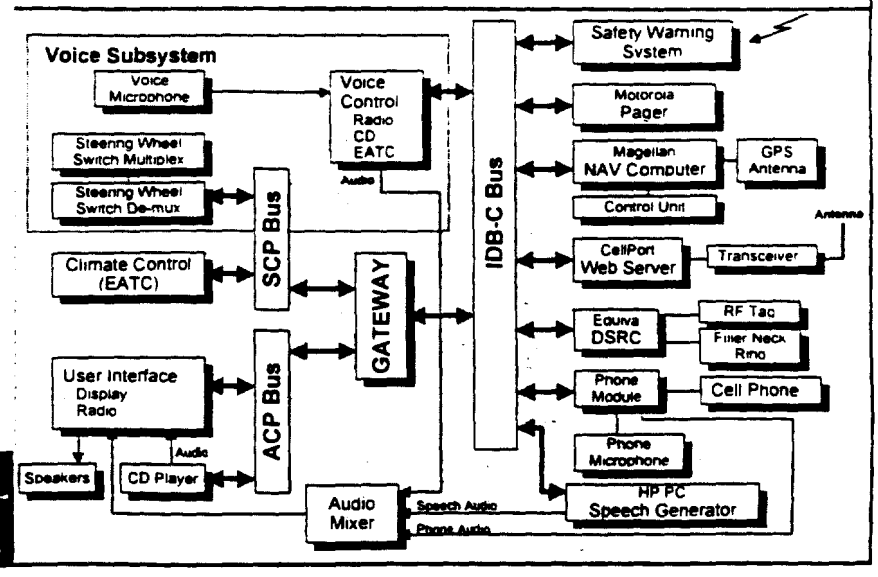

IDB Forum Members

- **55 Members – Europe, Japan, North America**

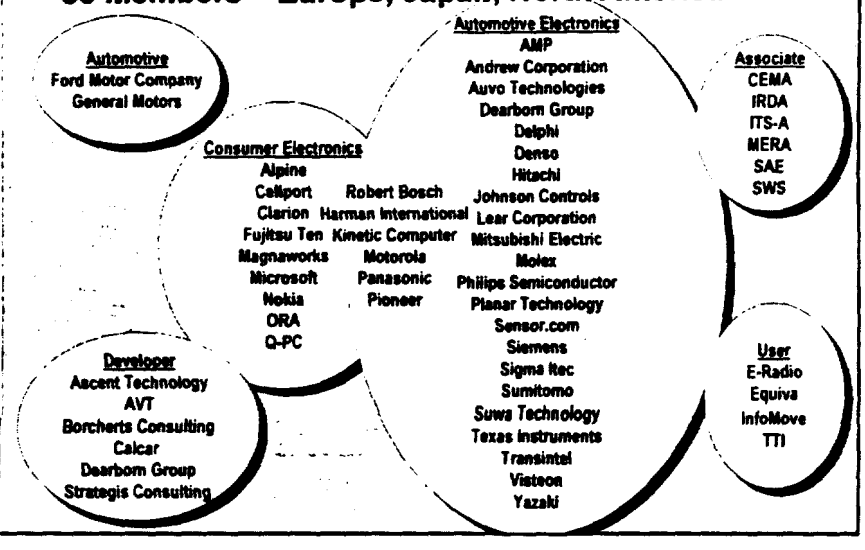

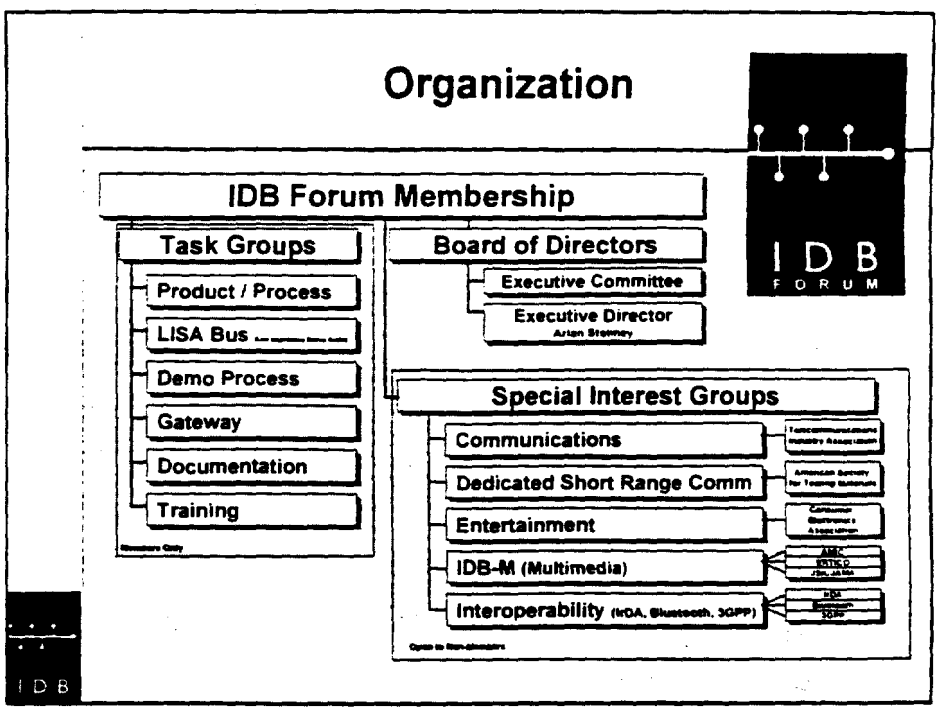
Organization
IDB Forum Membership
Task Groups
Product / Process
LISA Bus
Demo Process
Gateway
Documentation
Training
Board of Directors
Executive Committee
Executive Director
Special Interest Groups
Communications
Dedicated Short Range Comm
Entertainment
IDB-M (Multimedia)
Interoperability
IDB
FORUM

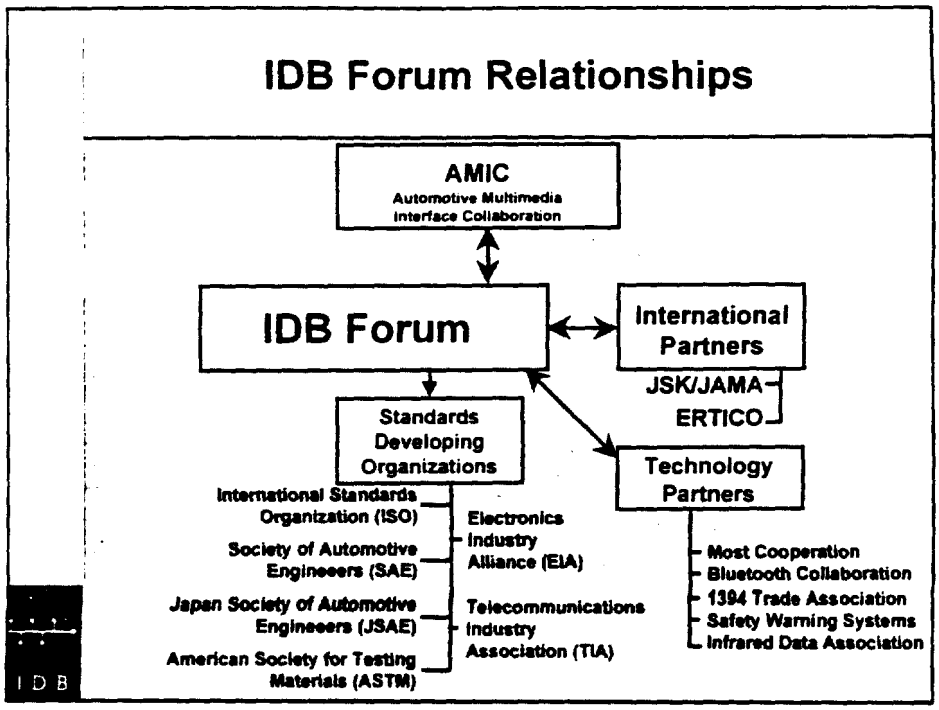
IDB Forum Relationships
AMIC
Automotive Multimedia Interface Collaboration
IDB Forum
International Partners
JSK/JAMA
ERTICO
Standards Developing Organizations
Technology Partners
International Standards Organization (ISO)
Society of Automotive Engineeers (SAE)
Japan Society of Automotive Engineeers (JSAE)
American Society for Testing Materials (ASTM)
Electronics Industry Alliance (EIA)
Telecommunications Industry Association (TIA)
Most Cooperation
Bluetooth Collaboration
1394 Trade Association
Safety Warning Systems
Infrared Data Association

IDB FORUM

idbforum.org

IDB

SMARTMOVE®

VEHICLE COMMUNICATION

TCFI - DSRC 2000

Bart Stevens

Introducing SmartMove

- Founded mid 1995 in partnership with IMEC, the worlds largest micro-electronics research center
- Several international patents in the area of Telematics
- >60 employees and contractors, mostly engineers
- Consultant for the Flemish government in the field of telematics
- SmartMove USA, with offices in Boston

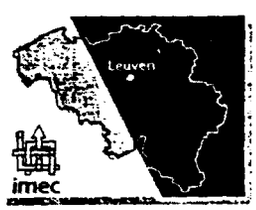

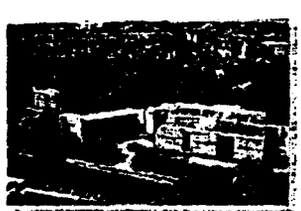

2

SMARTMOVE

The Evolution of Vehicle Telematics

First generation — *1995*

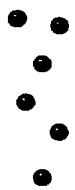

Stand alone non-compatible devices with a single functionality (e.g. alarm, navigation toll ID system)

Second generation — *199*

Combined technologies, linked to a proprietary control & service center
Functionality defined and/or limited by the service supplier
(e.g. OnStar with GSM-GPS, Tegaron, Car-Stop, etc.)

Third generation — *1999* — *2003*

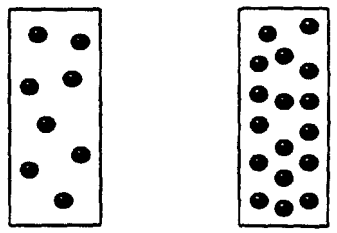

The core element of future-proof Telematics is the "communication computer". Applications & Services are lightweight Java software modules downloaded on to the communication computer.
The driver subscribes to a ever growing offering of third party services.

3

Unlimited Information & Services to Driver and Vehicle

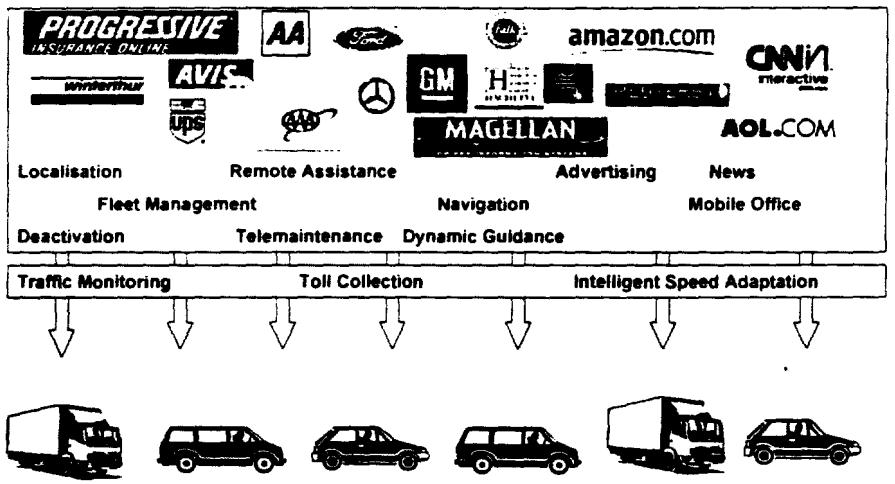

4

Information Services without SmartMove

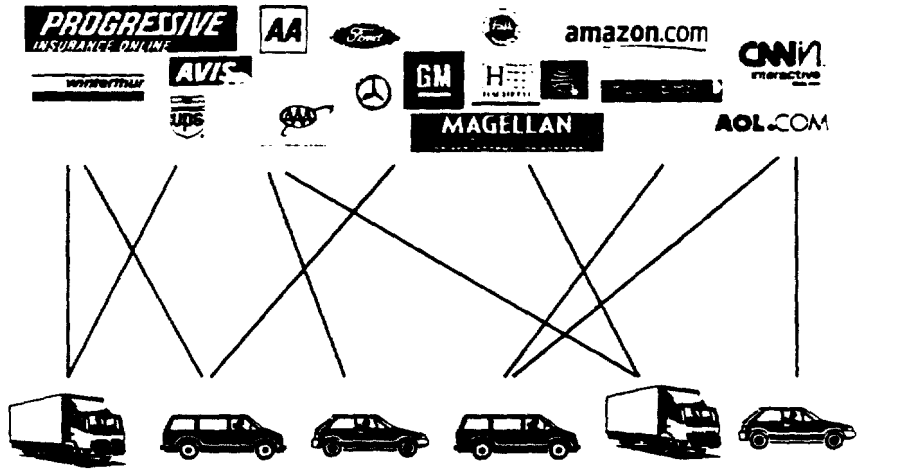

5

SmartMove

Information Services with SmartMove

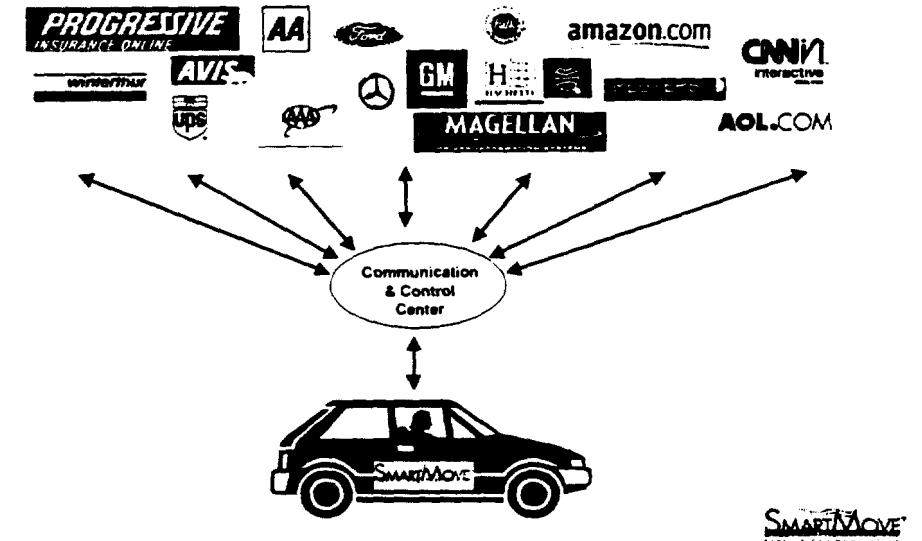

6

SmartMove

The SmartMove Product Offering

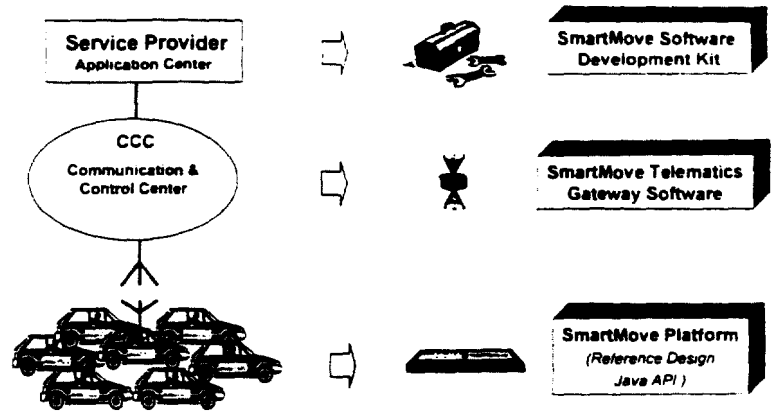

7

SMARTMOVE

The SmartMove Platform

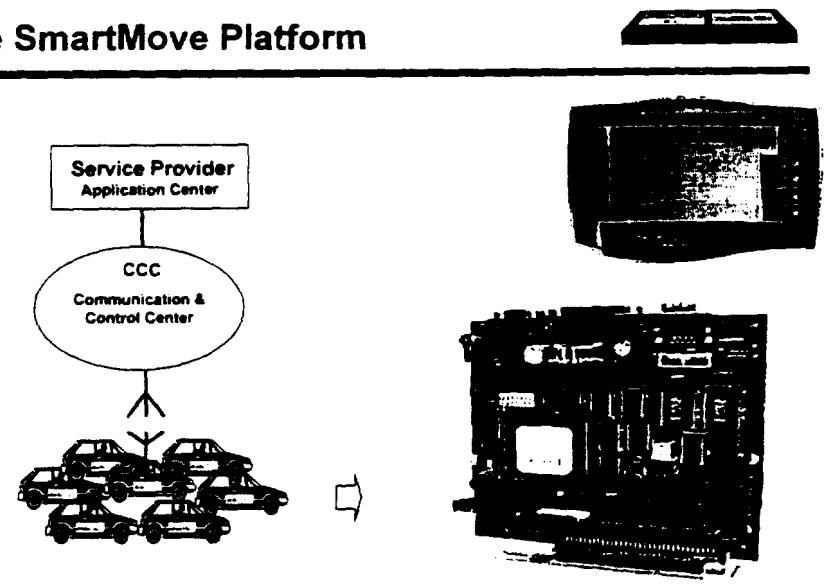

8