EXHIBIT B. 6.

March 14, 2000 Test Plan for "Nextel's Location System Field Evaluation," TechnoCom Corporation.

NEXTEL

Nextel's Location System Field Evaluation

Test Plan

Presented To:

Nextel Communications, Inc.

TechnoCom Corporation

TechnoCom Corporation
16133 Ventura Blvd., Suite 500
Encino, CA 91436

March 14, 2000

TABLE OF CONTENTS

1. INTRODUCTION 1

2. TEST ASSUMPTIONS 1

3. TEST OBJECTIVES 1

3.1 PERFORMANCE MEASURES 2
3.1.1 Location Accuracy 2
3.1.2 Processing Time 2
3.1.3 Reliability of the Location Estimates 2

4. TESTING REQUIREMENTS 3

4.1 OPERATIONAL ENVIRONMENTS 3
4.2 LDS INFRASTRUCTURE 3
4.3 MOBILE EQUIPMENT 3
4.4 STATIONARY EQUIPMENT 4
4.5 TEST CENTER EQUIPMENT. 4
4.6 SUPPORT EQUIPMENT 5
4.7 DATA ACQUISITION 7
4.8 NUMBER OF REPETITIONS 7
4.9 CALL DURATION 8

5. TEST PLAN. 8

5.1 TEST PREPARATION 8
5.1.1 MTU Operation 8
5.1.2 MTU Installation Procedure 9
5.1.3 Initial Compatibility Verification 12
5.1.4 Data gathering and transfer Procedure. 12
5.2 TEST SCENARIOS 13
5.2.1 Stationary Tests 14
5.2.2 Mobile Tests 15

6. DATA ANALYSIS 15

APPENDIX A: GROUND TRUTH DETERMINATION A-1

APPENDIX B: DATA ACQUISITION PROCEDURES B-1

APPENDIX C: TEST AREAS C-1

APPENDIX D: STATISTICAL BASIS FOR PROPOSED MEASUREMENTS D-1

1. INTRODUCTION

To meet the FCC mandated Report and Order, Nextel is in the process of evaluating competing Location systems for deployment throughout its networks. The performance of the location technologies, in terms of accuracy, response time and reliability, the maturity of these technologies, the cost of their deployment, their impact on the network, and how they can be connected to the E-911 system are the key issues under evaluation by Nextel. This test plan outlines the field tests undertaken to evaluate the operational performance of a Location Determination System hereafter referred to as LDS.

The principal objective of the proposed effort is to test an LDS under various operational scenarios and assess its ability to meet the requirements of E-911. Specifically, this evaluation concentrates on a location system's performance measures such as location accuracy, time to first fix, coverage, and reliability. The evaluation results, coupled with the results of other on-going studies, will enable Nextel to select the most suitable E9-1-1 location solution.

2. TEST ASSUMPTIONS

It is assumed that the LDS is deployed prior to the initiation of the trials. All preliminary operational verifications to assure proper operation of the LDS are to be conducted by the LDS vendor. Upon completion of such verifications and the acceptance of the results by Nextel, the trial will officially commence.

The testing outlined in this test plan will focus primarily on the performance associated with locating iDEN handsets using the first reported location after call initiation. All tests are based on 20-second calls.

The tests for each LDS will be conducted during a forty (40) hour test period, using two test teams each consisting of a driver, a field engineer, and when appropriate a vehicle housing the mobile test equipment[1].

3. TEST OBJECTIVES

The objective of this technical trial is to evaluate the performance obtained with an LDS under test by gathering representative data to assess accuracy, delay, and reliability of the first fix provided by the location determination system. Due to the relatively short duration of the calls, the impact of hand-offs and dropped or terminated calls on the location estimates is to be evaluated on a secondary basis. Limits on the operation of the LDS during the busy hours of Nextel's network are to be analyzed also.

[1] As discussed in § 4.7 and analyzed in Appendix D, the number of calls required to obtain adequate levels of statistical confidence depends on the performance of the LDS (as expressed for example by its mean and/or variance). It is possible that in the case of repeated location failures or large positioning errors that a higher number of calls than planned will be required. Additional test time could become necessary in such a case.

3.1 Performance measures

3.1.1 Location Accuracy

The error in estimating the location of the caller using LDS will be computed by comparing the LDS determined position to the actual location of the caller, which will be determined using the Ground Truth position determination procedure described in Appendix A. The accuracy will be based on the first location delivered by the LDS after call initiation. This information will be presented as a function of the operating parameters, which include field environment, time of day, etc.

3.1.2 Processing Time

The Processing Time of the LDS to obtain the first computed caller location will be reported as a function of the operating parameters. This processing time is calculated by establishing the precise time that call initiation information is provided to the LDS by the Nextel network. Nextel will obtain this information via a call trace message, whose results will be relayed to the LDS. The time this trace information is provided to the LDS will be somewhat different from call initiation time, defined as the time the "send" button is depressed. Call initiation time is also of interest and will be recorded at the mobile unit. To establish synchronization among these three events (call initiation, arrival of the info at the LDS, and arrival of the location fix at the Nextel test facility) the clocks at the three entities (mobile unit, LDS, and Nextel) shall all be tied to GPS time. Additionally, the time stamps will be logged with a $1/10^{th}$ of a second accuracy.

3.1.3 Reliability of the Location Estimates

The collected data will provide the statistics of the computed location error (in feet and/or meter) as well as the processing time for all the scenarios outlined in Section 5. The reliability of the LDS will be evaluated by statistically analyzing the recorded data, as a function of the operating conditions (e.g., propagation environment). The results of the statistical analysis will present:

1. Average delay in reporting the location estimates.

2. Statistics of estimates including mean and variance of the error in estimating the location.

3. Confidence intervals and levels associated with the statistics based on the number of calls and test locations used.

4. Other statistics including the percentage of calls for which a location fix is provided by the LDS (position determination yeild), and the percentage of calls for which the location estimate meets the FCC criteria.

The evaluation of the above statistics will be performed in the post-processing phase upon completion of the field trials.

4. TESTING REQUIREMENTS

4.1 Operational Environments

The objective of this evaluation is to present the performance of the LDS under normal operating conditions. These include operating in urban, suburban and downtown areas, in addition to particular situations that result in call hand-offs and call drop-outs (e.g., weak signal, blockage and call handling through a base station that is not closest to the mobile).

To evaluate the above operational environments, Nextel's coverage of the test area has been investigated and areas representative of the following operating conditions are selected:

- General suburban characterized by a flat area with no or very few high-rises, some blockage from smaller structures, and mild foliage.
- Variable suburban with foliage and some rolling hills.
- Middle of downtown area
- Downtown vicinity near water
- Indoors in a downtown building

These test areas are outlined in Section 5.

4.2 LDS Infrastructure

The infrastructure utilized in these trials is the responsibility of the vendor. The vendor software and hardware versions, the placement of their sensors and all other relevant information will be documented to assure completeness and repeatability of the test results reported.

4.3 Mobile Equipment

As depicted in Figure 4.2.1, two vehicles will be equipped with the following:

1. Mobile Test Unit (MTU) with integrated GPS receiver and CDPD modem.
2. A Nextel iDEN phone
3. DGPS offset data beacon receiver.

4. GPS magnetic-mount antenna with cable and connector (placed on center of vehicle roof).

5. DGPS beacon receiver magnetic-mount antenna (placed so as not to obstruct the field of view of the GPS antenna).

6. A ¼ wave magnetic-mount cellular antenna for the CDPD modem. This antenna is to be placed on the vehicle trunk lid or roof as far as practical from both the GPS and DGPS beacon receiver antennas

7. Laptop with two serial ports connected to the MTU and the iDEN unit. The laptop runs the Comarco and TechnoCom data gathering software.

The test setup will be utilized in the mobile testing as well as in-vehicle stationary tests.

4.4 Stationary Equipment

The stationary tests are conducted at locations for which the exact position is known. These points are selected to represent the environments outlined in Section 4.1. All points are surveyed prior to the trial.

The equipment required for testing is a subset of the Mobile Equipment described in Section 4.4. The stationary test setup will consist of:

1. Mobile Test Unit with integrated GPS receiver and CDPD modem. This unit is only utilized in providing the accurate clock needed to time stamp the data. At each test location, the unit will be disconnected from the vehicle and powered using a battery pack. No antenna connection will be needed.

2. A Nextel iDEN phone

3. Laptop with two serial ports connected to the MTU and the iDEN unit. The laptop runs the Comarco and TechnoCom data gathering software.

4.5 Test Center Equipment.

The Test Center equipment is utilized in gathering and analyzing the data. The equipment as depicted in Figure 4.1 consists of:

1. One desktop PC with 1 serial port, Windows'98 operating system, a floppy-disk drive, a hard disk with at least 1 GB of free disk space, a mouse and keyboard and a 17 inch or larger SVGA monitor. This PC will be used to run the data analysis software.

2. One analog dial-up line.

At a central test facility, the data reduction computer will be utilized in post processing the data gathered at the mobile, from Nextel, and the locations calculated by the LDS.

The LDS gathers all the data using the format described in Section 4.7. The LDS stores the desired information and provides the results to the test director every night or upon request by the director.

4.6 Support Equipment.

Stationary test points selected as part of these trials should be accessible at all times. However, since this may not be possible to guarantee 100% of the time, the test crews will be required to carry a compass and a measuring tape in the event that offset determination from surveyed reference points is necessary.

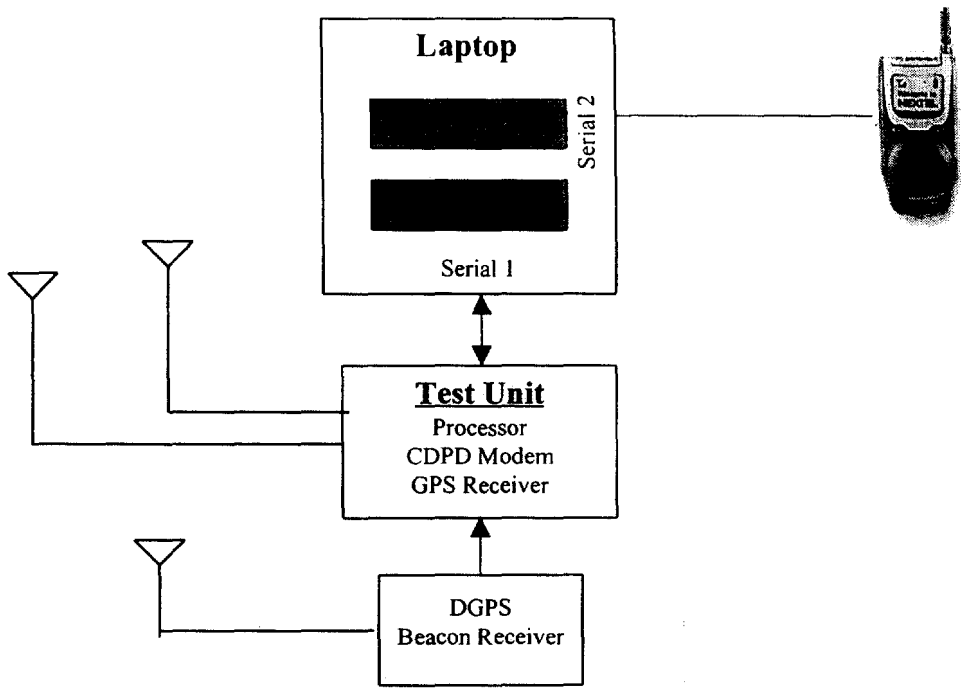

Mobile Equipment

Figure 4.1 Mobile Equipment

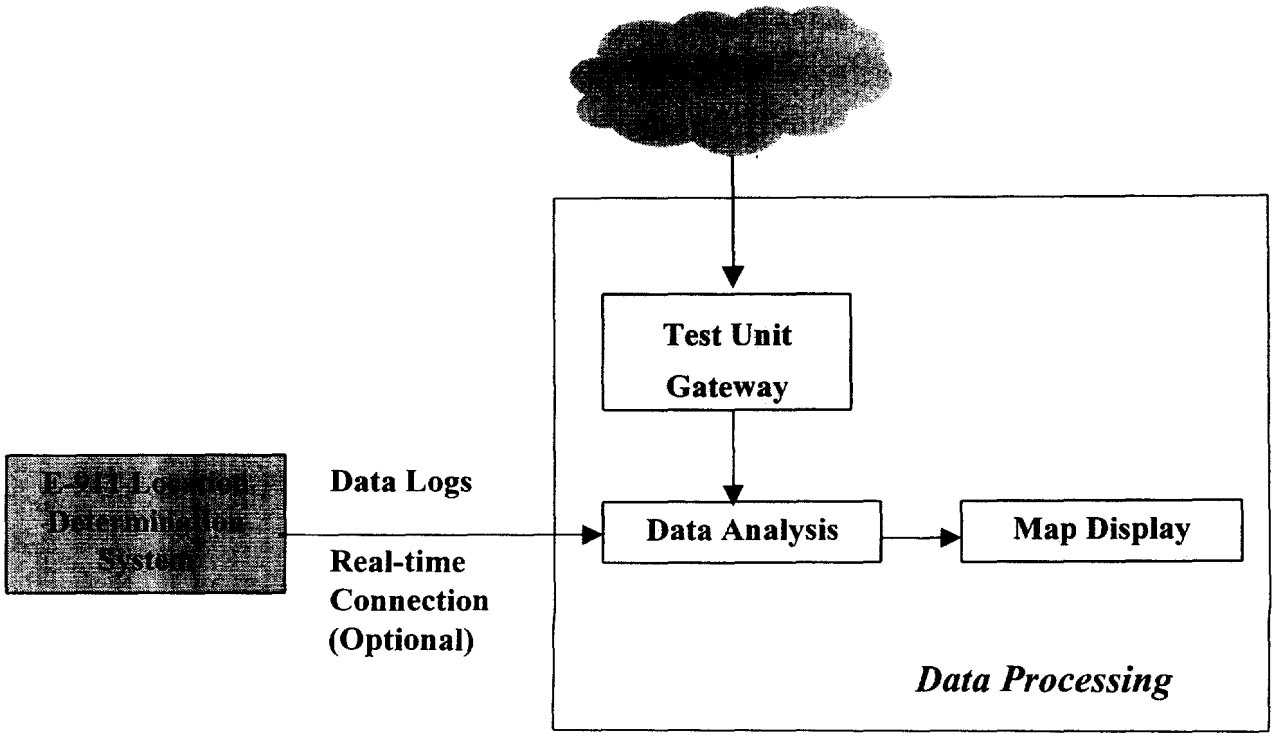

Figure 4.2 Test Center Equipment

4.7 Data Acquisition

For each test call the following data will be collected at the LDS:

1. Location Sample ID
2. Unit ID
3. Time of location determination accurate to 1/10th of a second
4. Latitude
5. Longitude
6. Number of location sensors utilized in the location determination
7. Location quality factor

The data to be recorded at the mobile will include:

1. Caller initiation message
2. Mobile location at a rate of one per second
3. Call termination message
4. Handoffs & dropped call messages
5. Time of occurrence of above messages accurate to 1/10th of a second

Nextel will record:

1. Message with Call Trace results sent to the LDS
2. Time of occurrence of above message accurate to 1/10th of a second (i.e., time it is sent to the LDS)

All data will be time stamped using GPS time.

Various test speeds will be used as appropriate in the different test phases. This will be specified in the more detailed test procedures. The speeds will generally be quantized as:

1. Stationary
2. 20-40 mph
3. 50-70 mph

4.8 Number of Repetitions

To derive test results that are statistically significant, the measurements at each test point will be repeated a certain number of times. To gain further confidence in the statistical results, while ensuring the magnitude of the overall test effort remains manageable,

multiple points will be used in each type of environment. Appendix D addresses the statistical analysis behind the chosen number of points and their aggregation. 30 calls with valid location reports will be placed at each test location as a minimum. Additionally, a minimum of 3 measurement locations per environment type will be used. The measurements at any given test location will be collected over several visits to the same test point. The results will be provided for each type of environment and will be reported with the attendant confidence interval and level as explained in Appendix D.

4.9 Call Duration

All calls will be up in conversation mode for 20 seconds. Text to be read by the test personnel will be provided to all teams.

5. TEST PLAN.

5.1 Test Preparation

5.1.1 MTU Operation

In order to verify that the MTU is provisioned and operational, a PC equipped with a terminal application must be used to send AT commands to the MTU. To connect the PC to the MTU, use a standard DB-9 male DTE cable to the MTU Functional Tester or cable harness, depending on the installation. The standard serial port configuration is 19,200 bits per second, 8 bits, no parity, 1 stop bit, and no hardware flow control. To test the functionality and operation of the unit type: `AT STATUS ALL?`

The MTU will respond with the following information:

```
COM:
Registered:          YES
Denied Reason:       N/A
Current Status:      Receive ISC
Radio Coverage:      CDPD Found
MDLP Connection:     Connect

CFG:
TEI:            (hexadecimal number)
Chan Acquired:  (decimal number from 1 to 1023)
Current RSSI:   (decimal number from -113 to -50 in dBm)
RX BLER:        (decimal number)
Cell Number:    (decimal number)
Channel List:   (decimal numbers)
```

If the registration status is NO, then wait 15 seconds and type the status command again.

Once the MTU registers, you can test communication by 'pinging' a known IP address.

To do this using the internal stack, type: **AT PING nnn.nnn.nnn.nnn**
The MTU will respond with: `Ping host (nnn.nnn.nnn.nnn)`

`Ping 64 bytes from nnn.nnn.nnn.nnn: time xxx ms`

(where xxx is the ping response time in msec., maximum of 10,000)

5.1.2 MTU Installation Procedure.

1. On the roof of the vehicle, find suitable locations for GPS antenna, cellular antenna, and the Beacon antenna.
2. Inside the vehicle find a suitable location for the laptop, MTU, and the Beacon Receiver. Note that the laptop, MTU, and the iDEN phone will be carried to the Test Locations.
3. Install GPS antenna and route cable to MTU location. The GPS antenna should have no blockage beyond 5° above the horizon.
4. Install cellular antenna and route antenna cable to MTU location.
5. Install Beacon antenna and route antenna cable to the Beacon Receiver.
6. Connect the data port of the Beacon receiver to the designated DB-9 connector of the MTU.
7. Connect the designated DB-9 connector of the MTU to Serial Port # 1 of the Laptop.
8. Connect the iDEN phone interface cable to Serial Port # 2 of the Laptop.
9. Connect the power inputs of the MTU, Beacon Receiver, and iDEN phone to the power assembly kit provided. Connect the Laptop to the output of the DC-to-AC inverter.
10. Attach 37 pin MTU wiring harness to MTU.
11. Connect cellular TNC connector and SMB GPS connector to MTU.
12. Attach beacon BNC connector to Beacon Receiver.
13. Note IP address of the MTU and Cellular number of the iDEN phone.
14. Attach main power.
15. Contact Test Director to perform an over the air test to verify operation.

The installation of the GPS antenna is critical to proper operation of MTU. For the GPS receiver to accurately compute its location, its antenna must have a clear view of the sky. The best place to mount the GPS is usually on the vehicle's highest point.

The following figure shows examples of good and poor vehicle mounting locations. When installing the GPS antenna on a vehicle roof, make sure that there are no obstructions close to the antenna that might block the view 360° to the horizon. Nothing like air horns or maker lights should block the antenna beyond 5° above the horizon. The

best location is usually near the center of the roof, although it is also desirable to locate the cellular antenna as far from the GPS antenna as is practical.

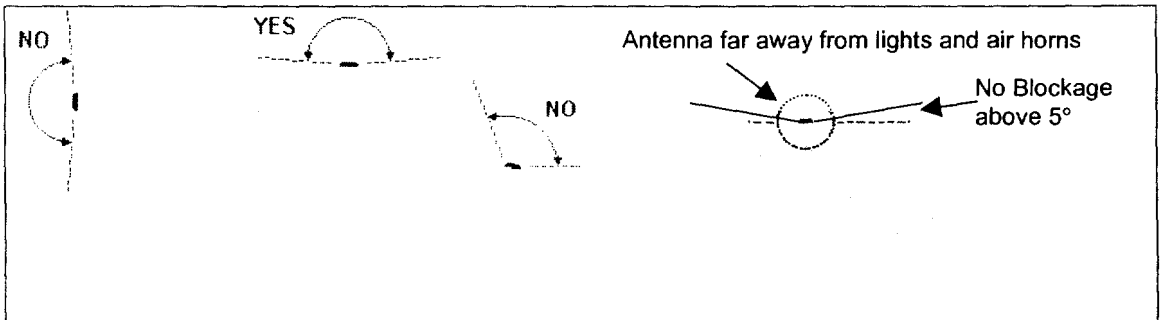

Examples of good and poor GPS antenna placement

The received signal levels at the GPS antenna from the satellites are very low in power (approximately -136 dBm), so any blockage of the antenna can affect the quality of the location computed by the receiver. Kinks or tight knots in the antenna cable can prevent the MTU from operating. When laying out the antenna cable, care should be taken so that the cable is not be subjected to crushing or strain.

The cellular antenna used by the MTU for CDPD service is a standard 3-dB gain whip. It mounts with standard NMO "Motorola" mount and requires ground plane to work properly. If possible, it should be located at least 3 feet from the GPS antenna. Ensure that the cable does not get crushed during installation.

3 dB Gain Cellular Antenna for CDPD

TechnoCom's functional tester allows installers to initiate diagnostics and display test results of the MTU in the field. The tester uses four LEDs to display the diagnostic status of the I/O lines, GPS receiver, CDPD modem, and serial interface using LEDs. A final Pass/Fail result is also shown. Using a Laptop the installer can access information such as Lat./Lon., number of GPS satellites used,

HDOP, CDPD channel and RSSI and registration status.

Functional Tester

5.1.3 Initial Compatibility Verification.

The initial compatibility verification is performed prior to the commencement of the official trial. It is assumed that the interface between Nextel and LDS has been tested and verified prior to this stage. The operation of mobile equipment, vendor infrastructure, Nextel's call trace function, and performance of analysis software is verified by performing stationary test under very favorable conditions, i.e. optimal location for LDS and GPS. The information gathered at LDS, Nextel, and the mobile is processed and analyzed. Any changes required to any subsystem will be incorporated prior to the trials.

As part of the Calibration process (See Appendix B), this test point is to be utilized by the test teams at the beginning and the end of every test day.

5.1.4 Data gathering and transfer Procedure.

The data files gathered during the test will be sent back to the Test Center using the wireless CDPD link. The files will first be compressed using PKZip or a similar file compression utility and then sent to the Test Center using FTP. The Test Center will need to provide an FTP site that is accessible from the internet so that the files may be uploaded.

5.1.4.1 Mobile Test Unit Data

For stationary test points, new files are to be generated on the laptop when the unit reaches the test location. The mobile operator places five 20 second calls once every 30 seconds. The operator then closes the file and proceeds to the next test location. The following naming convention shall be used:

Sxx-Ty-zzzz.txt

where:

xx is the Test Location number
y is the Team number
zzzz is the time of day such as 1535 to represent 3:35 PM local time.

For mobile tests, new files are to be generated on the laptop at the beginning of the test route. 20 second calls are made once every 30 seconds until the end of the test route. The operator then saves the file using the following convention:

Mxx-Ty-zzzz.txt

where:

xx is the Mobile Route Number
y is the Team number
zzzz is the time of day.

All files are stored in a directory corresponding to the date of the test. At the end of each day or on request from the Test Director, all data files are to be compressed and transferred to the Nextel server using FTP. This is accomplished via the MTU and a server accessible on the Internet.

5.1.4.2 LDS Data

The LDS will continuously gather and store data received on the two units under test. To limit the size of the files it is suggested that the files are saved on 30 minute intervals. At the end of each day or on request from the Test Director, all data files are to be compressed and transferred to the Nextel server using FTP.

5.1.4.3 Nextel Call Trace Data

Nextel will continuously gather and store data received on the two units under test. To limit the size of the files it is suggested that the files are saved on 30 minute intervals. These files are stored on the server as they become available.

5.2 Test Scenarios

Figure C-1 depicts the Nextel Test Area (NTA). The objective is to select test scenarios that represent as wide a range of operational conditions as possible within the geographic limitations of the NTA. For each test scenario the results of this trial will include but will not be limited to:

1. Accuracy of the location estimates (with statistical confidence interval and level).
2. Average processing time (i.e. delay in location estimates)
3. System reliability (yield percentage)

These results will be presented as a function of:

1. Time of day
2. Operational environment (urban/dense; suburban; by water; rural/open; indoor)

3. Speed of the caller

4. Geometry relative to the LDS equipped sites.

The stationary test location as well as test routes are selected to represent a variation of RF environments and topology.

5.2.1 Stationary Tests

Five environments have been defined for the test area, which encompass the range of environments experienced in most metropolitan areas and their surroundings. These environments are identified in Table 5.1. The color codes in the table refer to the spreadsheet in Appendix C providing the specific test locations.

Thirty calls with valid location reports will be placed at each test location as a minimum. To assure accuracy, the caller will stand directly on top of the surveyed point. The measurements at any given test location will be collected over several visits to the same test point.

Table 5-1. Environment Classifications and Proposed

Environment	Color code	# points
1 Urban/Dense		12
2 Suburban		7
3 By Water		3
4 Rural/open		5
5 Indoor		4
	Total	31

Number of Test Points in the NTA

The system accuracy and yield for in-vehicle and out of vehicle scenarios will be evaluated in urban, suburban, and rural environments. In each environment three locations will be selected and calls are placed inside and outside of the car. 60 calls per location will be placed (30 inside and 30 outside).

LDS performance will be correlated with network loading, in an effort to determine if gross impacts on LDS accuracy can be attributed to network loading.

5.2.2 Mobile Tests

The objective of this stage is to evaluate the performance of the LDS under a typical mobile environment that includes: high degree of multipath (particularly reflections), blockage, frequent call hand-offs, and heavy cellular traffic. Table 5-5, summarizes the recommended field tests, and the corresponding figures that depict the street maps.

Routes	Operating Scenarios	Reference
Route group #1	Surface Street-Suburban Area	Figure C-4
Route group #2	Middle of downtown area	Figure C-5
Route group #3	Freeway driving during high/low cellular traffic, and high/low speeds	Figure C-6 & C-7
Route group #4	Road/bridge near water and bay	Figure C-8

Table 5-5. Field test matrix for typical mobile environment testing

6. DATA ANALYSIS

The log files obtained from the LDS will contain rows of data with one row corresponding to each call. The format of the row will be as follows:

Location sample ID; Mobile Unit ID; Time of fix; latitude; Longitude; Sensor Count; Location quality factor.

Locations calculated at the LDS can be matched to the data gathered in the field during the mobile and stationary tests. The data is synchronized using a time stamp filter which assures that in mobile cases the latency and/or time offsets between the DGPS location fixes and the location system fixes do not significantly affect the test results.

In stationary test cases, the information from the surveys is used in the determination of system accuracy. Time synchronization is only utilized in the calculation of the system delays.

For each test location, the calls that result in no location fix (0 quality factor/ cell centroid position) will be separated from the remainder of the calls. Additionally, calls with location errors over 300m will be separated as outliers (but not as failed positioning attempts). Assuming, as an example, that the average error for the remaining calls is 100m, the 300 m threshold would correspond to roughly 5.5 sigma (for a Rayleigh distribution after excluding outliers[1].) The sample mean and standard deviation for the remaining points will be determined. The sample mean and variance for the superset

[1] See Appendix D.

including the outliers will also be computed. These will be compared and the confidence intervals for each case determined.

The same procedure will be repeated aggregating all the test points belonging to a certain environment. Obviously higher confidence levels and statistical accuracy will be achieved with the higher number of points as explained in appendix D. A histogram for the radial positioning error will then be generated for each environment. Exceedance statistics will also be generated (e.g., percentage of points within 100 m).

For each environment the mean and variance of the time to fix will also be computed and a histogram generated.

The results will generally be reported on a per environment basis. Additionally, an overall analysis that takes into account all of the test locations/environments will be performed and its results generated for information purposes.

Appendix A
Ground Truth Determination

A.1 Introduction

The determination of ground truth is critical in the evaluation of the accuracy of location fixes provided by an LDS. This appendix provides the methodology used in the determination of ground truth location for the different test scenarios covered in these trials. Methodologies for ground truth determination at stationary (in building and outdoors) and in-vehicle points (mobile and stationary) are provided.

A.2 Stationary Test Points (Outdoors)

A GPS receiver aided by a Coast Guard beacon receiver shall be utilized in the determination of ground truth for outdoor test points. A GPS antenna mounted on the shoulder of the test engineer shall be used while outside the vehicle.

For the duration of each test, the GPS data shall be logged at a rate of one per second. An accuracy of 50 centimeters circular error probable is expected when correction information is available. The average of all differentially corrected coordinates will be used in the determination of the reference coordinates.

In cases where GPS coverage is not optimal, a surveying company will be contracted to perform the ground truth determination. Such locations shall be marked permanently so that future tests can be conducted.

A.3 Stationary Test Points (Indoors)

A surveying company will be contracted to perform the ground truth determination for all the indoor test points. Detailed description of such locations will be provided for future discovery and testing.

A.4 In-vehicle Tests

GPS receiver aided by a Coast Guard beacon receiver shall be utilized in setting the ground truth for all in vehicle tests. For the duration of the tests, the GPS data shall be logged at a rate of one per second. An accuracy of 5 meters circular error probable is expected when correction information is available.

For stationary tests the average of all differentially corrected coordinates will be used in the determination of the reference coordinates.

For mobile tests GPS time stamps shall be used in synchronizing the DGPS data with the coordinates calculated by the LDS.

Appendix B
Data Acquisition Procedures

B.1 Introduction

This appendix provides an initial description of the data acquisition procedures during the Nextel E-911 location trials in Washington DC. Accurate, reliable analysis of the performance of the location determination technology will require a careful, coordinated collection of data at both the mobile and fixed ends of the link. Moreover, daily calibrations of the "reference location" will need to be performed to establish a precise location baseline and assure system operability.

B.2 Data acquisition at LDS

The mobile caller will initiate the xxx-xxxx call. Nextel will then send a call trace message to the LDS that includes the required channel information. Throughout the tests the duration of the calls will be kept fixed at 20 seconds.

Upon receiving the call trace message from Nextel, the LDS will initiate the data acquisition process and will start recording the call particulars as well as the estimated location. The first location meeting the quality requirements imposed by the LDS shall be time stamped and logged for evaluation by the independent observers.

The call shall be terminated after 20 seconds of conversation. The LDS is not required to perform any further location estimation beyond the first fix provided.

The recorded data will include but will not be limited to:

1. Location Sample ID
2. Unit ID
3. Time of location fix accurate to $1/10^{th}$ of a second
4. Latitude
5. Longitude
6. Number of location sensors utilized in the fix
7. Location quality factor

Furthermore, for each call Nextel will record:

1. Time call initiation trace is sent to LDS
2. Call particulars (e.g., cell, sector)

The format of the data will allow for post processing using standard spreadsheet programs. Post-processing will include combining the field-measured data, the LDS data, and Nextel's logs for comparison purposes.

B.3 Data acquisition at the mobile

The mobile unit will be driven in a set of pre-determined routes and will also be used in performing the stationary tests. The iDEN phone will initiate the calls to the test center. The LDS will estimate the location and will record the call particulars and location parameters as described in Section B2.

The purpose of data acquisition at the mobile is to facilitate the analysis of the LDS location estimates. To meet this requirement, the exact location of the mobile as a function of time will be recorded in addition to call particulars. The unit will record call attributes that include:

1. Caller initiation message
2. Mobile location at a rate of once per second
3. Call termination message
4. Handoffs & dropped messages

All messages are time stamped using GPS time with an accuracy of $1/10^{th}$ of a second.

The format of the data will allow post processing using standard spreadsheet programs.

B.4 Calibration Procedure

To assure that accuracy and operability of all components of the trial, a stationary test point at an optimal location for LDS and GPS shall be selected and precisely surveyed. This point is to be utilized by the test teams at the beginning and the end of every test day. Ten calls shall be made at this point during each visit by a team.

Appendix C.

Test Locations

Appendix D.
Statistical Basis for Proposed Measurements

The selection of the number of test attempts to perform either at a set of locations or at a given location is made in a manner that achieves statistically significant results. It is conventional to regard all deviations greater than those with probabilities of 0.05 as real, or statistically significant. This equivalently means that to establish a certain mean value for the position determination error through repeated trials, it should be established with a probability of 0.95 or greater (i.e., with 95% confidence). The positioning error for any single attempt is a random variable and the average positioning error for a set of measurements is its self a random variable. It can be expressed as falling within +/- Δ of its mean μ, with a desired level of confidence that depends on the number of trials. The required number of trials is a function of the variance or standard deviation σ of the positioning error. The larger the σ, the larger the number of trials required to achieve a certain confidence level.

To simplify the following analysis, it is convenient and often justified to assume that the average positioning error in either the X or Y direction to have a normal distribution[1]. If the sources of positioning error in the measurement attempts can be considered independent, and if the distribution of the positioning error is fairly concentrated about its mean (i.e., not too many outliers) then the central limit theorem can be invoked to arrive at a normal distribution for the error in either direction. This assumption is more confidently made when several test locations are included in the sample than when all test points are coincident. However, to a first approximation, the normal distribution could be assumed to hold as long some reasonable conditions exist, e.g., the given test location is not outside the coverage area or the signal cannot penetrate to it, etc.

Assume that the average positioning error in the X direction for a sample of n measurements to be X_{av} meters. Its probability distribution can then be expressed as $N(\mu_x, \sigma_x/\sqrt{n})$. The objective of statistical significance in the X direction then would be to chose n such that $P[\,|X_{av} - \mu_x| < \Delta_x\,] \geq 0.95$. Alternately, this can be expressed in terms of the normalized Gaussian random variable $[\,Xav - \mu_x]/(\sigma_x/\sqrt{n})$, which has zero mean and unit variance, as $P[\,|X_{av} - \mu_x| < \Delta/(\sigma_x/\sqrt{n})\,] \geq 0.95$ which yields $\Delta_x/(\sigma_x/\sqrt{n}) = 1.96$ or

$$n \geq (1.96\sigma_x/\Delta_x)^2.$$

[1] The corresponding circular location error is close to a Rayleigh with some outliers that do not conform to that distribution.

Now the question is what is a reasonable value for Δ_x? Since we do not know σ_x apriori, and can only bound it for a reasonably functioning positioning system, it is perhaps best to express Δ_x in relation to σ_x. Actually, what is of more importance is Δ_r of the radial error and its associated confidence level.

It is a good approximation to model the radial error as a Rayleigh random variable, i.e.,

$$f(r) = (r/a^2) \exp[-r^2/2a^2] \qquad r > 0$$

The mean and variance of this density are given by:

$$\mu_r = a \sqrt{(\pi/2)}$$

$$\sigma^2_r = [2 - \pi/2]\, a^2$$

which provides the relationship

$$\sigma = \mu \sqrt{(4/\pi - 1)}$$

If the mean of the circular error is $\mu_r = 100$ m (excluding the "clear outliers"), then its standard deviation $\sigma_r = 52$ m. Now $\sigma_r = \sqrt{(\sigma_x^2 + \sigma_y^2)}$, and assuming the errors in the x and y to be of identical variance (which is quite reasonable) then $\sigma_x = 36.8$ m. If we desire a measurement to 12 m radial accuracy, or roughly $\sigma_r/3$, that can be considered a $12/\sqrt{2}$ or 8.5 m in either the X or Y directions. Accordingly $\sigma_x / \Delta_x = 36.8/8.5 = 4.3$. Thus, using the normal distribution and confidence interval relationship provided earlier, n will need to be 75 samples or greater. In other words, 75 or more attempts are needed to measure the location error to within 12m with 95% confidence. Alternately, to measure the location error to within 20 m with 95% confidence 27 or more trials would be required.

So 30 repetitions of calls with valid locations appear to be adequate, but the results need to be interpreted in the context of the underlying confidence interval. An important implication is that the number of calls at a given location would have to be multiplied by the inverse of the location system yield at that point to provide the desired level of statistical confidence for that point (taken in isolation).

More importantly, from an overall trial perspective, a minimum of 75 points in any environment is required to establish the average location error with reasonable accuracy and confidence. This is provided for through the requirement of a minimum of 3 points per environment with 30 valid measurements at each.

If through actual field measurements μ_r or σ_r are found to be much higher than 100 m (after the clear outliers are removed), than a larger number of attempts n may be required

at a given point for the same confidence, or alternately more points per environment would be needed.