DOCKET FILE COPY ORIGINAL

Albert Shuldiner
Vice President & General Counsel

RECEIVED
JUN 22 2001
FCC MAIL ROOM

June 21, 2001

Ms. Magalie R. Salas
Secretary
Federal Communications Commission
445 12th Street, S.W.
Washington, DC 20554

RE: MM Docket No. 99-325

Dear Ms. Salas:

On behalf of iBiquity Digital Corporation ("iBiquity"), enclosed for filing in the above-referenced docket is a recently adopted Recommendation from the International Telecommunication Union. ITU-R Recommendation BS.1514, entitled *System for Digital Sound Broadcasting in the Broadcasting Bands Below 30 MHz*, provides guidance on factors for all Administrations to consider when implementing terrestrial digital AM broadcasting. The Recommendation endorses iBiquity's AM In-Band On-Channel system as satisfying the service requirements for digital sound broadcasting in this band. iBiquity is please to have received this endorsement from the International Telecommunication Union and encourages the Commission to include this information in this proceeding to assist the Commission's development of a domestic digital audio broadcasting standard.

Any questions concerning this matter should be directed to the undersigned.

Respectfully submitted,

Albert Shuldiner

No. of Copies rec'd 0+2
List A B C D E

8865 Stanford Boulevard • Suite 202 • Columbia MD 21045 • Phone 410 872 1536 • Fax 410 872 1560

RECOMMENDATION ITU-R BS.1514

System for digital sound broadcasting in the broadcasting bands below 30 MHz

(Question ITU-R 217/10)

(2001)

The ITU Radiocommunication Assembly,

considering

a) that there is an increasing requirement worldwide for suitable means of broadcasting high-quality monophonic or stereophonic sound to vehicular, portable and fixed receivers;

b) that listeners to LF, MF, and HF broadcasts do not yet have an opportunity to benefit from the use of digital transmissions by broadcasters;

c) that digital sound broadcasting in these bands offers the potential for new and improved services to listeners;

d) that listeners will benefit from the existence of a single worldwide standard for the transmission and reception of digital signals;

e) that receiver manufacturers can provide relevant elements of the standard recognizing the various market conditions;

f) that the present congestion in some countries of the broadcasting bands below 30 MHz causes a high level of interference and limits the number of programmes which can be transmitted;

g) that broadcasters rely heavily upon the use of these bands because of their favourable propagation conditions, particularly for wide-area coverage requirements;

h) that to facilitate the transition to digital transmission in a manner that ensures continuity of service a simulcast (combined analogue and digital transmission) solution may be necessary in addition to digital-only solutions;

j) that Recommendation ITU-R BS.1348 on service requirements for digital sound broadcasting in these bands specifies a series of requirements that are focusing system developers in several countries to overcome the current deficiencies in audio quality and signal robustness and to provide new services;

k) that subsequent to an ITU-R Call for Proposals (see Circular Letter 10/LCCE/39 dated 29 September 1999), asking for system descriptions and laboratory and field test results, two ITU-R Sector members submitted documentation on these matters which was taken into account in October 2000;

l) that the two system proponents have agreed to continue to cooperate to develop a standard for digital sound broadcasting in these bands;

m) that during its evaluation process Radiocommunication Study Group 6 concluded that a reasonable merging of various aspects of the two systems proposed would serve as the basis for the single worldwide standard suggested in Question ITU-R 217/10;

n) that Study Group 6 concluded that it would be desirable to have a common consumer digital/analogue receiver to accommodate all broadcasts in the broadcasting bands below 30 MHz;

o) that concise functional design specifications of the two proposals in *considering* k) above appear in Annexes 1 and 2, with more extensive details referenced in Appendix 1;

p) that each of the system proponents has submitted laboratory and field test results, referenced in Appendix 1 for prototype equipment, and that condensed versions of these test results, matched to evaluation criteria defined in Annex 3 are presented in Annexes 4 and 5,

recommends

1 that the system characteristics outlined in Annexes 1 and 2, with more extensive details referenced in Appendix 1, which meet the service requirements of Recommendation ITU-R BS.1348, and answer affirmatively Question ITU-R 217/10, comprise the single common digital sound broadcasting system for use in the broadcasting bands below 30 MHz;

2 that any implementation of digital sound broadcasting in the above bands should embody the system characteristics in Annex 1 or Annex 2.

ANNEX 1

Summary description of the Digital Radio Mondiale (DRM) system

1 Key features of the system design for the markets to be served by the DRM system

The DRM system, is a flexible digital sound broadcasting system for use in the terrestrial broadcasting bands below 30 MHz.

It is important to recognize that the consumer radio receiver of the near future will need to be capable of decoding any or all of several terrestrial transmissions; that is, narrow-band digital (for <30 MHz RF), wider band digital (for >30 MHz RF), and analogue for the LF, MF, HF bands and the VHF/FM band. The DRM system will be an important component within the receiver. It is unlikely that a consumer radio receiver designed to receive terrestrial transmissions with a digital capability would exclude the analogue capability.

In the consumer radio receiver, the DRM system will provide the capability to receive digital radio (sound, program related data, other data, and still pictures) in all the broadcasting bands below 30 MHz. It can function in an independent manner, but, as stated above, will more likely be part of a more comprehensive receiver – much like the majority of today's receivers that include AM and FM band analogue reception capability.

The DRM system is designed to be used in either 9 or 10 kHz channels or multiples of these channel bandwidths. Differences in detail on how much of the available bit stream for these channels is used for audio, for error protection and correction, and for data depend on the allocated band (LF, MF, or HF) and on the intended use (for example, ground wave, short distance sky wave or long distance sky wave). In other words, there are modal trade-offs available so that the system can match the diverse needs of broadcasters worldwide. As indicated in the next section, when regulatory procedures are in place to use channels of greater bandwidth than 9/10 kHz, the DRM system's audio quality and total bit stream capability can be greatly improved.

The DRM system employs advanced audio coding (AAC), supplemented by spectral band replication (SBR) as its main digital encoding. SBR improves perceived audio quality by a technique of higher baseband frequency enhancement using information from the lower frequencies as cues. OFDM/QAM is used for the channel coding and modulation, along with time interleaving and forward error correction (FEC) using multi-level coding (MLC) based on a convolutional code. Pilot reference symbols are used to derive channel-equalization information at the receiver. The combination of these techniques results in higher quality sound with more robust reception within the intended coverage area when compared with that of currently used AM.

The system performs well under severe propagation conditions, such as those encountered under long distance multipath HF sky-wave propagation, as well as under easier to cope with MF ground-wave propagation. In the latter case, maximum use is made of the AAC and SBR source coding algorithms, leading to much higher quality audio than that achieved by AM, since a minimal amount of error correction has to be employed. For many HF propagation conditions, the necessity to achieve a high degree of robustness reduces the audio quality compared to MF digital; nevertheless, the audio quality is still better than current AM quality.

The design permits the use of the DRM system within a single frequency network (SFN).

It also provides the capability for automatic frequency switching, which is of particular value for broadcasters who send the same signals at different transmission frequencies. For example, this is done routinely by large HF broadcasting organizations using AM to increase the probability of at least one good signal in the intended reception area. The DRM system can enable a suitable receiver to select the best frequency for a programme automatically without any effort on the part of the listener.

2 Brief description of the DRM system

2.1 Overall design

FIGURE 1

Block diagram of input to a transmitter

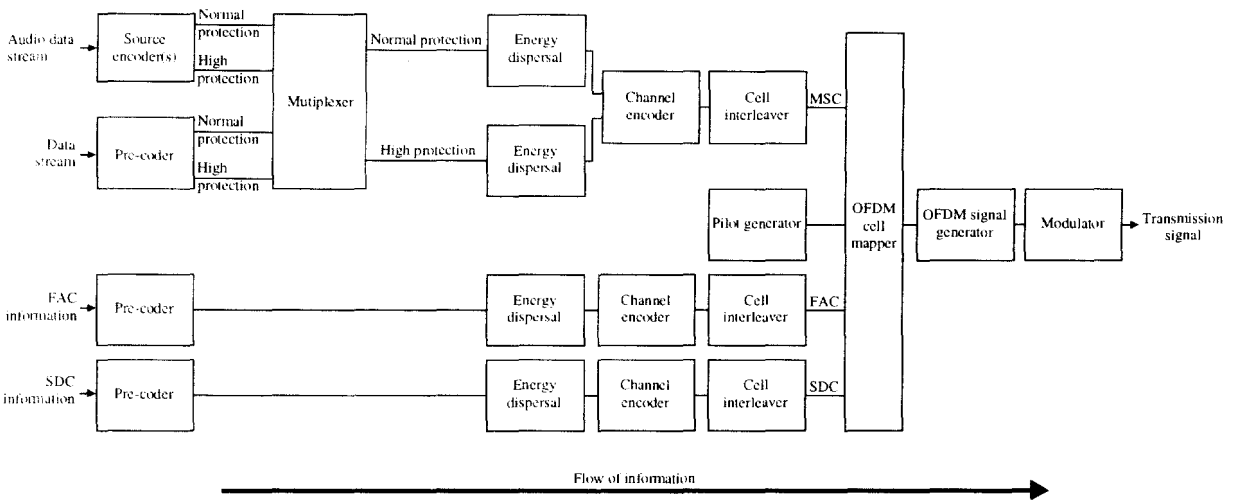

MSC: main service channel

1514-01

Figure 1 describes the general flow of the different classes of information (audio, data, etc.) from encoding on the left of the Figure to a DRM system transmitter exciter on the right. Although a receiver diagram is not included as a figure, it would represent the inverse of this diagram.

On the left are two classes of input information:

- the encoded audio and data that are combined in the main service multiplexer;
- information channels that bypass the multiplexer that are known as fast access channel (FAC) and service description channel (SDC) whose purposes are described in § 2.3.

The audio source encoder and the data pre-coders ensure the adaptation of the input streams onto an appropriate digital format. Their output may comprise two parts requiring two different levels of protection within the subsequent channel encoder.

The multiplex combines the protection levels of all data and audio services.

The energy dispersal provides a deterministic, selective complementing of bits in order to reduce the possibility that systematic patterns result in unwanted regularity in the transmitted signal.

The channel encoder adds redundant information as a means for error correction and defines the mapping of the digital encoded information into QAM cells. The system has the capability, if a broadcaster desires, to convey two categories of "bits", with one category more heavily protected than the other.

Cell interleaving spreads consecutive QAM cells onto a sequence of cells, quasi-randomly separated in time and frequency, in order to provide an additional element of robustness in the transmission of the audio in time-frequency dispersive channels.

The pilot generator injects information that permits a receiver to derive channel-equalization information, thereby allowing for coherent demodulation of the signal.

The OFDM cell mapper collects the different classes of cells and places them on a time-frequency grid.

The OFDM signal generator transforms each ensemble of cells with the same time index to a time domain representation of the signal, containing a plurality of carriers. The complete time-domain OFDM symbol is then obtained from this time domain representation by inserting a guard interval – a cyclic repetition of a portion of the signal.

The modulator converts the digital representation of the OFDM signal into the analogue signal that will be transmitted via a transmitter/antenna over the air. This operation involves frequency up-conversion, digital-to-analogue conversion, and filtering so that the emitted signal complies with ITU-R spectral requirements.

With a non-linear high-powered transmitter, the signal is first split into its amplitude and phase components (this can advantageously be done in the digital domain), and then recombined (by the action of the transmitter itself) prior to final emission.

2.2 Audio source coding

FIGURE 2

Source coding overview

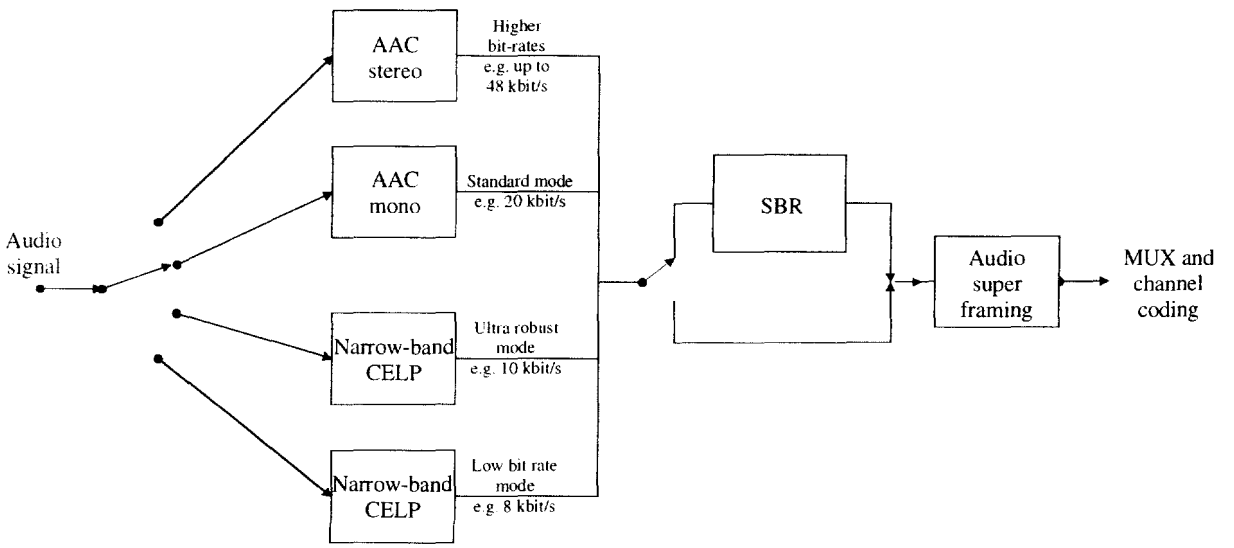

CELP: code excited linear prediction

1514-02

The source coding options available for the DRM system are depicted in Fig. 2. All of these options, with the exception of the one at the top of the Figure (AAC stereo), are designed to be used within the current 9/10 kHz channels for sound broadcasting below 30 MHz. The CELP option provides relatively low bit-rate speech encoding and the AAC option employs a subset of

standardized MPEG-4 for low bit rates (that is, up to 48 kbit/s). These options can be enhanced by a bandwidth-enhancement tool, such as the SBR depicted in the Figure. Representative output bit rates are noted in the Figure. All of this is selectable by the broadcaster.

Special care is taken so that the encoded audio can be compressed into audio superframes of constant time length (400 ms). Multiplexing and unequal error protection (UEP) of audio/speech services is effected by means of the multiplex and channel coding components.

As an example of the structure, consider the path in Fig. 2 of AAC mono plus SBR. For this, there are the following properties:

Frame length:	40 ms
AAC sampling rate:	24 kHz
SBR sampling rate:	48 kHz
AAC frequency range:	0-6.0 kHz
SBR frequency range:	6.0-15.2 kHz
SBR average bit rate:	2 kbit/s per channel

In this case, there is a basic audio signal 6 kHz wide, which provides audio quality better than standard AM, plus the enhancement using the SBR technique that extends this to 15.2 kHz. All of this consumes approximately 22 kbit/s. The bitstream per frame contains a fraction of highly protected AAC and SBR data of fixed size, plus the majority of AAC and SBR data, less protected, of variable size. The fixed-time-length audio superframe of 400 ms is composed of several of these frames.

2.3 Multiplex, including special channels

As noted in Fig. 1, the DRM system total multiplex consists of three channels: the MSC, the FAC and the SDC. The MSC contains the services, audio and data. The FAC provides information on the signal bandwidth and other such parameters and is also used to allow service selection information for fast scanning. The SDC gives information to a receiver on how to decode the MSC, how to find alternate sources of the same data, and gives attributes to the services within the multiplex.

The MSC multiplex may contain up to four services, any one of which can be audio or data. The gross bit rate of the MSC is dependent upon the channel bandwidth and transmission mode being used. In all cases, it is divided into 400 ms frames.

The FAC's structure is also built around a 400 ms frame. The channel parameters are included in every FAC frame. The service parameters are carried in successive FAC frames, one service per frame. The names of the FAC channel parameters are: base/enhancement flag, identity, spectrum occupancy, interleaver depth flag, modulation mode, number of services, reconfiguration index, and reserved for future use. These use a total of 20 bits. The service parameters within the FAC are: service identifier, short identifier, CA (conditional access) indication, language, audio/data flag, and reserved for future use. These use a total of 44 bits. (Details on these parameters, including field size, are given in the system specification.)

The SDC's frame periodicity is 1 200 ms. Without detailing the use for each of the many elements within the SDC's fields, the names of them are: multiplex description, label, conditional access, frequency information, frequency schedule information, application information, announcement

support and switching, coverage region identification, time and date information, audio information, FAC copy information, and linkage data. As well as conveying this data, the fact that the SDC is inserted periodically into the waveform is exploited to enable seamless switching between alternate frequencies.

2.4 Channel coding and modulation

The coding/modulation scheme used is a variety of coded orthogonal FDM (COFDM) which combines OFDM with MLC based on convolutional coding. These two main components are supplemented by cell interleaving and the provision of pilot cells for instantaneous channel estimation, which together mitigate the effects of short-term fading, whether selective or flat.

Taken together, this combination provides excellent transmission and signal protection possibilities in the narrow 9/10 kHz channels in the long-wave, medium-wave and short-wave broadcasting frequency bands. And it can also be effectively used at these broadcasting frequencies for wider channel bandwidths in the event that these are permitted from a regulatory standpoint in the future.

For OFDM, the transmitted signal is composed of a succession of symbols, each including a guard interval – a cyclic prefix which provides robustness against delay spread. Orthogonality refers to the fact that, in the case of the design of the DRM system, each symbol contains approximately 200 subcarriers spaced across the 9/10 kHz in such a way that their signals do not interfere with each other (are orthogonal). The precise number of subcarriers, and other parameter considerations, are a function of the mode used: ground wave, sky wave, and highly robust transmissions.

QAM is used for the modulation that is impressed upon each of the various subcarriers to convey the information. Two primary QAM constellations are used: 64-QAM and 16-QAM. A QPSK mode is also incorporated for highly robust signalling (but not for the MSC).

The interleaver time span for HF transmission is in the range of 2.4 s to cope with time- and frequency-selective fading. Owing to less difficult propagation conditions, a shortened interleaver with 0.8 s time span can be applied for LF and MF frequencies.

The multi-level convolutional coding scheme will use code rates in the range between 0.5 and 0.8, with the lower rate being associated with the difficult HF propagation conditions.

2.5 Transmitter considerations

The DRM system exciter can be used to impress signals on both linear and non-linear transmitters. It is expected that high-powered non-linear transmitters will be the normal way of serving the broadcasters. This is similar to current practice which exists for double-side-band amplitude modulation.

Because of this need, over the past few years, using the DRM system and other prototypes, effort has been spent to determine how these non-linear transmitters can be used with narrow-band digital signals. The results have been encouraging, as can be seen from recent DRM system field tests.

Briefly, the incoming signal to a Class C (non-linear amplification) transmitter needs to be split into its amplitude and phase components prior to final amplification. The former is passed via the anode

circuitry, the latter through the grid circuitry. These are then combined with the appropriate time synchronization to form the output of the transmitter.

Measurements of the output spectra show the following: the energy of the digital signal is more or less evenly spread across the 9/10 kHz assigned channel; the shoulders are steep, and drop rapidly to 40 dB or so below the spectral density level within the assigned 9/10 kHz channel, and the power spectral density levels continue to decrease at a lower rate beyond ±4.5/5.0 kHz from the central frequency of the assigned channel.

2.6 Over the air

The digital phase/amplitude information on the RF signal is corrupted to different degrees as the RF signal propagates. Some of the HF channels provide challenging situations of fairly rapid flat fading, multipath interference that produces frequency-selective fading and large path delay spreads in time, and ionospherically induced high levels of Doppler shifts and Doppler spreads.

The error protection and error correction incorporated in the DRM system design mitigates these effects to a great degree. This permits the receiver to accurately decode the transmitted digital information.

2.7 Selecting, demodulation and decoding of a DRM system signal at a receiver

A receiver must be able to detect which particular DRM system mode is being transmitted, and handle it appropriately. This is done by way of the use of many of the field entries (noted in § 2.3) within the FAC and SDC.

Once the appropriate mode is identified (and is repeatedly verified), the demodulation process is the inverse of that shown in the upper half of Fig. 1, the diagram of the transmitter blocks.

Similarly, the receiver is also informed what services are present, and, for example, how source decoding of an audio service should be performed.

ANNEX 2

In-band on-channel digital sound broadcasting (IBOC DSB) system for operation below 30 MHz

1 IBOC DSB system

The in-band on-channel (IBOC) digital sound broadcasting (DSB) system is designed to operate in both a "hybrid" and "all-digital" mode. The mode of operation depends on the broadcasting frequency, the existing use of the spectrum and the service requirements of the broadcaster. The hybrid mode of operation permits simultaneous broadcast of identical program material in both an analogue and digital format within the channel currently occupied by the analogue signal. The

all-digital mode provides enhanced capabilities for operation in the same channel after removal of the existing analogue signal or where the channel is not currently used for analogue broadcasts.

The IBOC DSB system is comprised of four basic components: the codec, which encodes and decodes the audio signal; FEC coding and interleaving which provides robustness through redundancy and diversity; the modem, which modulates and demodulates the signal; and blending, which provides a smooth transition from the digital to either the existing analogue signal, in the case of hybrid operations, or a back-up digital signal, in the case of all-digital operations.

In addition to the improved audio quality, the IBOC DSB system also provides data services. There are three basic IBOC DSB data services: dedicated fixed rate, adjustable rate, and opportunistic variable rate.

In dedicated fixed-rate services, the data rate is set and cannot be changed by the broadcaster. Specifically, the iDAB data service (IDS) continuously offers an array of low-bandwidth data services similar to those currently provided by the radio broadcast data system (RBDS). The IDS effectively uses a fixed amount of system capacity, leaving the balance for adjustable levels of audio, parity, and other data services.

Adjustable-rate services operate at a fixed rate, for a pre-determined period. However, unlike fixed-rate services, the broadcaster has the option of adjusting the data rate, trading data throughput for audio quality or robustness. For instance, the encoded audio bit rate could be reduced (in finite steps) to allow increased data throughput, at the expense of digital audio quality.

Opportunistic variable-rate services offer data rates that are tied to the complexity of the encoded digital audio. Highly complex audio requires more throughput than simpler passages. The audio encoder dynamically measures audio complexity and adjusts data throughput accordingly, without compromising the quality of the encoded digital audio.

1.1 System components

1.1.1 Codec

The IBOC DSB system uses the AAC codec supplemented by SBR. This delivers high quality "FM-like" stereo audio within the bandwidth constraints imposed on operations below 30 MHz. To further enhance the robustness of the digital audio beyond that provided by FEC and interleaving, special error concealment techniques are employed by the audio codecs to mask the effects of errors in the input bit-stream. Furthermore, the audio codec bit-stream format provides the flexibility of allowing future enhancements to the basic audio coding techniques.

1.1.2 Modulation techniques

The IBOC DSB system uses QAM. QAM has a bandwidth efficiency that is sufficient for transmission of "FM-like" stereo audio quality as well as providing adequate coverage areas in the available bandwidth.

The system also uses a multi-carrier approach called OFDM. OFDM is a scheme in which many QAM carriers can be frequency-division multiplexed in an orthogonal fashion such that there is no interference among the carriers. When combined with FEC coding and interleaving, the digital

signal's robustness is further enhanced. The OFDM structure naturally supports FEC coding techniques that maximize performance in the non-uniform interference environment.

1.1.3 FEC coding and interleaving

FEC coding and interleaving in the transmission system greatly improve the reliability of the transmitted information by carefully adding redundant information that is used by the receiver to correct errors occurring in the transmission path. Advanced FEC coding techniques have been specifically designed based on detailed interference studies to exploit the non-uniform nature of the interference in these bands. Also, special interleaving techniques have been designed to spread burst errors over time and frequency to assist the FEC decoder in its decision-making process.

A major problem confronting systems operating below 30 MHz is the existence of grounded conductive structures that can cause rapid changes in amplitude and phase that are not uniformly distributed across the band. To correct for this, the IBOC DSB system uses equalization techniques to ensure that the phase and amplitude of the OFDM digital carriers are sufficiently maintained to ensure proper recovery of the digital information. The combination of advanced FEC coding, channel equalization, and optimal interleaving techniques allows the IBOC DSB system to deliver reliable reception of digital audio in a mobile environment.

1.1.4 Blend

The IBOC DSB system employs time diversity between two independent transmissions of the same audio source to provide robust reception during outages typical of a mobile environment. In the hybrid system the analogue signal serves as the backup signal, while in the all-digital system a separate digital audio stream serves as the backup signal. The IBOC DSB system provides this capability by delaying the backup transmission by a fixed time offset of several seconds relative to the main audio transmission. This delay proves useful for the implementation of a blend function. During tuning, blend allows transition from the instantly acquired back-up signal to the main signal after it has been acquired. Once acquired, blend allows transition to the back-up signal when the main signal is corrupted. When a signal outage occurs, the receiver blends seamlessly to the backup audio that, by virtue of its time diversity with the main signal, does not experience the same outage.

Digital systems depend on an interleaver to spread errors across time and reduce outages. Generally longer interleavers provide greater robustness at the expense of acquisition time. The blend feature provides a means of quickly acquiring the back-up signal upon tuning or re-acquisition without compromising full performance.

1.2 Operating modes

1.2.1 Hybrid MF mode

In the hybrid waveform, the digital signal is transmitted in sidebands on either side of the analogue host signal as well as beneath the analogue host signal as shown in Fig. 3. The power level of each OFDM subcarrier is fixed relative to the main carrier as indicated in Fig. 3. The OFDM carriers, or digital carriers, extend approximately ±14.7 kHz from the AM carrier. The digital carriers directly beneath the analogue signal spectrum are modulated in a manner to avoid interference with the analogue signal. These carriers are grouped in pairs, with a pair consisting of two carriers that are

equidistant in frequency from the AM carrier. Each pair is termed a complementary pair and the entire group of carriers is called the complementary carriers. For each pair, the modulation applied to one carrier is the negative conjugate of the modulation applied to the other carrier. This places the sum of the carriers in quadrature to the AM carrier, thereby minimizing the interference to the analogue signal when detected by an envelope detector. Placing the complementary carriers in quadrature to the analogue signal also permits demodulation of the complementary carriers in the presence of the high level AM carrier and analogue signal. The price paid for placing the complementary carriers in quadrature with the AM carriers is that the information content on the complementary carriers is only half of that for independent digital carriers.

FIGURE 3

Hybrid MF IBOC DSB power spectral density

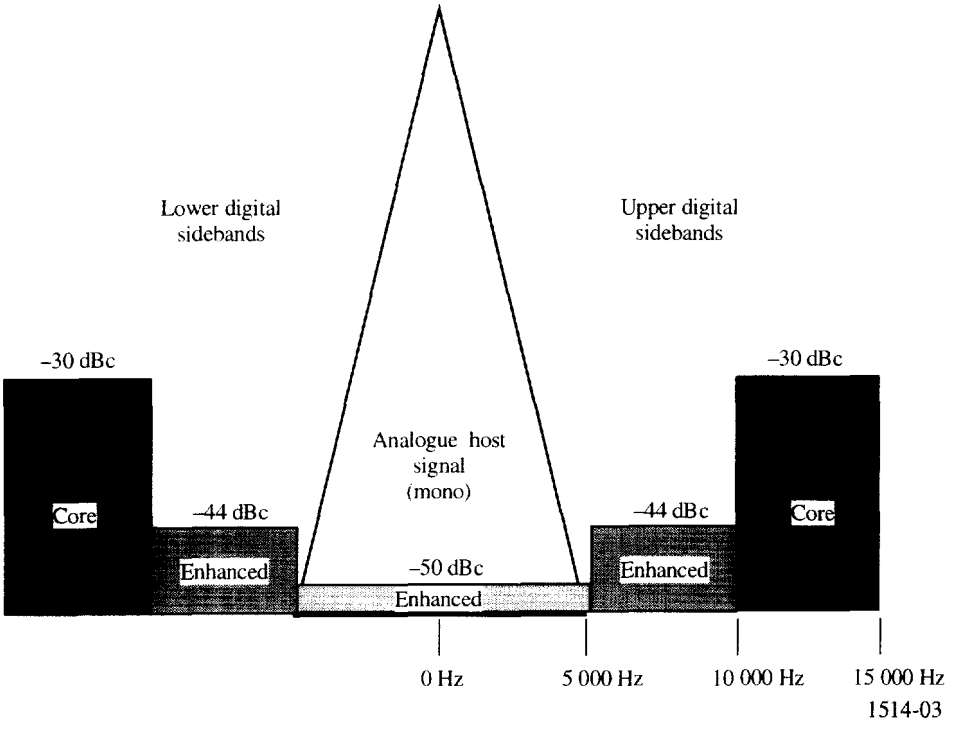

The hybrid mode is designed for stations operating at MF in areas where it is necessary to provide for a rational transition from analogue to digital. The hybrid mode makes it possible to introduce the digital services without causing harmful interference to the existing host analogue signal.

To maximize the reception of the digital audio, the IBOC DSB system uses a layered codec where the compressed audio is split into two separate information streams: core and enhanced. The core stream provides the basic audio information whereas the enhanced stream provides higher quality and stereo information. The FEC coding and placement of the audio streams on the OFDM carriers is designed to provide a very robust core stream and a less robust enhancement stream. For the hybrid system the core information is placed on high-powered carriers ±10 to 15 kHz from the analogue carrier while the enhanced information is placed on the OFDM carriers from 0 to ±10 kHz.

To protect the core audio stream from interference and channel impairments the IBOC DSB system uses a form of channel coding with the special ability to puncture the original code in various overlapping partitions (i.e., main, backup, lower sideband and upper sideband). Each of the four overlapping partitions survives independently as a good code. The lower and upper sideband partitions allow the IBOC DSB system to operate even in the presence of a strong interferer on either the lower or upper adjacent, while the main and backup partitions allow the IBOC DSB system to be acquired quickly and be robust to short-term outages such as those caused by grounded conductive structures.

In the hybrid system the core audio throughput is approximately 20 kbit/s while the enhanced audio throughput adds approximately 16 kbit/s.

1.2.2 All-digital MF mode

The all-digital mode allows for enhanced digital performance after deletion of the existing analogue signal. Broadcasters may choose to implement the all-digital mode in areas where there are no existing analogue stations that need to be protected or after a sufficient period of operations in the hybrid mode for significant penetration of digital receivers in the market place.

As shown in Fig. 4, the principal difference between the hybrid mode and the all-digital mode is deletion of the analogue signal and the increase in power of the carriers that were previously under the analogue signal. The additional power in the all-digital waveform increases robustness, and the "stepped" waveform is optimized for performance under strong adjacent channel interference.

FIGURE 4

All-digital MF IBOC DSB power spectral density

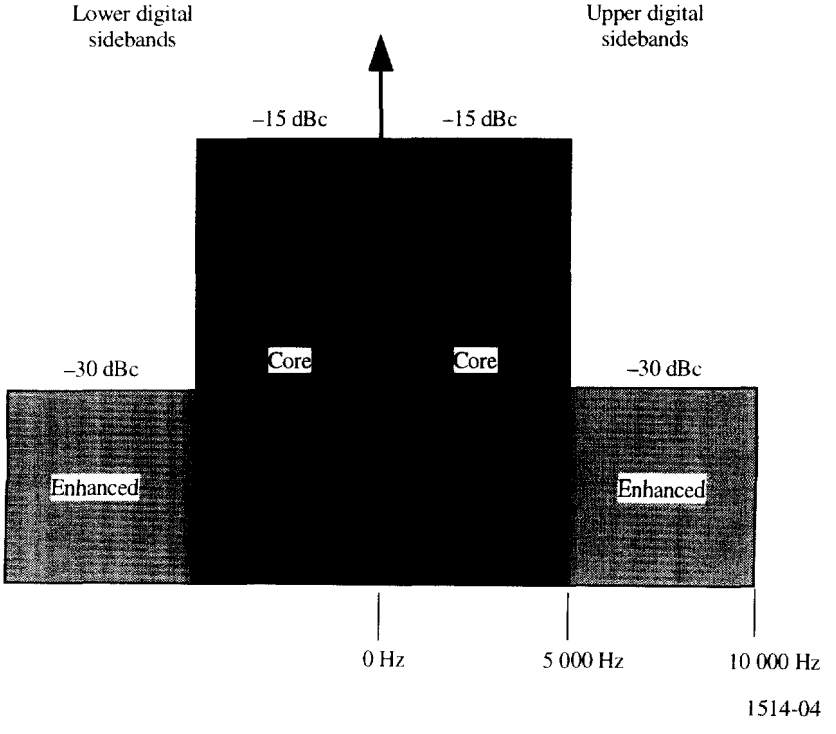

The same layered codec and FEC methods, with identical rates (i.e. ~20 kbit/s for the core audio and ~16 kbit/s for the enhanced audio), are used in the all-digital system as is used in the hybrid system. This simplifies the design of a receiver having to support both systems.

1.2.3 Generation of the signal

A functional block diagram of the hybrid MF IBOC DSB transmitter is shown in Fig. 5. The input audio source on the studio transmitter link feeds an L + R monaural signal to the analogue MF path and a stereo audio signal to the DSB audio. The DSB path digitally compresses the audio signal in the audio encoder (encoder) with the resulting bit stream delivered to the FEC encoder and interleaver. The bit stream is then combined into a modem frame and OFDM modulated to produce a DSB baseband signal. Diversity delay is introduced in the analogue MF path and passed through the station's existing analogue audio processor and returned to the DSB exciter where it is summed with the digital carriers. This baseband signal is converted to magnitude Δ and phase φ for amplification in the station's existing analogue transmitter (see Note 1).

NOTE 1 – Details such as data insertion and synchronization have been omitted here for simplicity.

FIGURE 5

Hybrid MF IBOC DSB transmitter block diagram

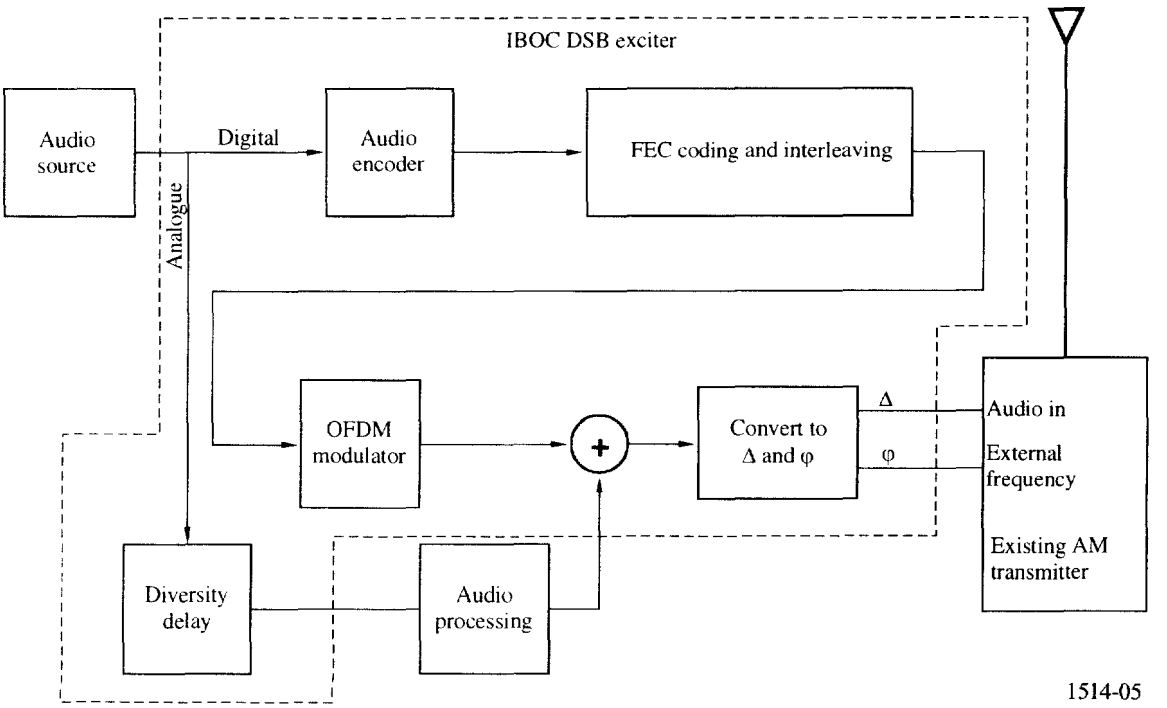

Several solid-state transmitters have been shown to have frequency response, distortion, and noise parameters that are sufficient to reproduce an IBOC hybrid waveform. The system has operated for many hours using a current production amplitude modulated transmitter for IBOC DSB transmission.

A similar approach is used for the all-digital system operating at MF. In the all-digital system, however, the analogue transmission path does not exist.

1.2.4 Reception of the signal

A functional block diagram of an MF IBOC receiver is presented in Fig. 6. The signal is received by a conventional RF front end and converted to IF, in a manner similar to existing analogue receivers. Unlike typical analogue receivers, however, the signal is filtered, A/D converted at IF, and digitally down converted to baseband in-phase and quadrature signal components. The hybrid signal is then split into analogue and DSB components. The analogue component is then demodulated to produce a digitally sampled audio signal. The DSB signal is synchronized and demodulated into symbols. These symbols are deframed for subsequent deinterleaving and FEC decoding. The resulting bit stream is processed by the audio decoder to produce the digital stereo DSB output. This DSB audio signal is delayed by the same amount of time as the analogue signal was delayed at the transmitter. The audio blend function blends the digital signal to the analogue signal if the digital signal is corrupted and is also used to quickly acquire the signal during tuning or reacquisition.

FIGURE 6

Hybrid MF IBOC typical receiver block diagram

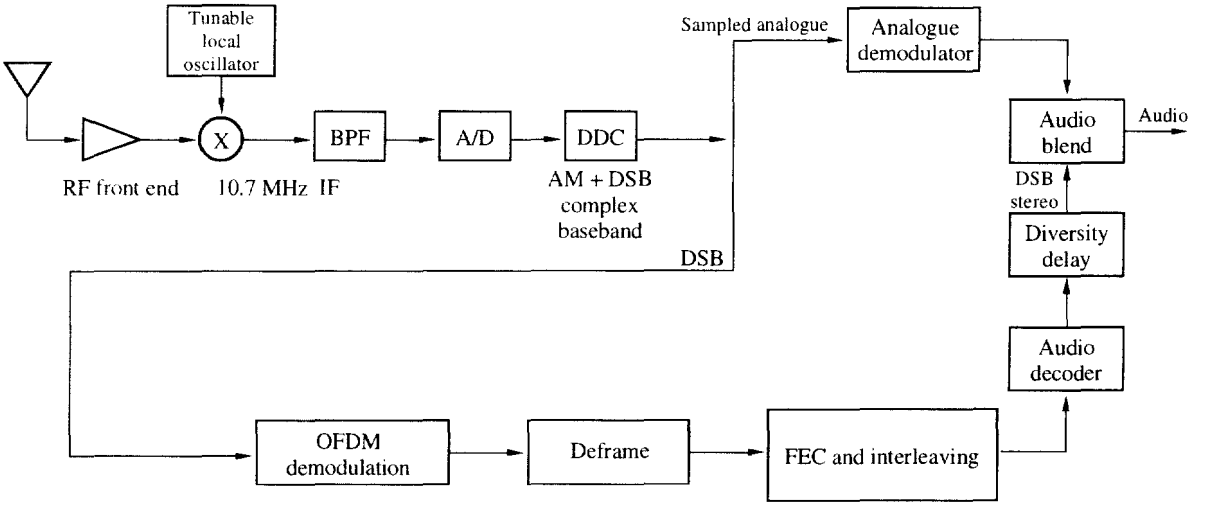

BPF: band pass filter
DDC: digital down conversion

1514-06

Noise blanking is an integral part of the IBOC receiver and is used to improve digital and analogue reception. Receivers use tuned circuits to filter out adjacent channels and intermodulation products. These tuned circuits tend to "ring", or stretch out short pulses into longer interruptions. A noise blanker senses the impulse and turns off the RF stages for the short duration of the pulse, effectively limiting the effects on the analogue "listenability," of ringing. Short pulses have a minimal effect on the digital data stream and increases "listenability of the analogue signal" (see Note 1).

NOTE 1 – The data paths and the noise blanker circuit are not shown for simplicity.

A similar approach is used for the all-digital mode except the analogue reception and demodulation and audio blend are not performed.

ANNEX 3

Evaluation criteria

Links between Question ITU-R 217/10 and the major criteria:

Studies decided in Question ITU-R 217/10	Major criteria
Decides 1	1, 2, 3, 6, 8, 11, 12
Decides 2	5, 8, 10
Decides 3	1, 2, 3, 6, 8, 9, 11, 13
Decides 4	4, 5, 8, 10
Decides 5	6, 9, 13, 14
Decides 6	7, 13, 14

Evaluation criteria

1 Unimpaired codec audio quality

2 Transmission circuit reliability

3 Coverage area and graceful degradation

4 Compatibility with new and existing transmitters

5 Channel planning considerations

6 Single frequency network operation

7 Receiver cost and complexity

8 Interference

9 Rapid tuning and channel acquisition

10 Compatibility with existing analogue formats

11 Spectrum efficiency

12 Single standard

13 Bench marking with existing AM services

14 Data broadcasting

15 Modularity.

1 Definitions of evaluation criteria

Criterion 1 – Unimpaired codec audio quality

The measured subjective perception of the basic input source coded compressed audio signal without induced noise and other transmission problems.

Criterion 2 – Transmission circuit reliability

The subjective and objective audio quality of the system under realistic conditions of actual transmission and reception. This takes into account the ability of the modulation waveform, error correction, etc. of the system design to provide satisfactory performance under different propagation conditions; these propagation conditions should be specified.

Criterion 3 – Coverage area and graceful degradation

Estimated actual coverage area for a given power level for the system under various propagation conditions. Coverage area will be defined as those surface area segments where the decoded signal is acceptable for the intended market.

Criterion 4 – Compatibility with new and existing transmitters

The ability to transmit the system waveform efficiently using either:

- currently available transmitter and antenna combinations with little or no modification required to the equipment;
- transmitter and antenna equipment specifically designed to carry it;
- transmitter and antenna equipment specifically designed to carry it and existing analogue formats.

The ability of such configurations to operate with acceptable levels of spurious emissions.

NOTE 1 – Many broadcasters will want or need to use their existing analogue broadcasting plant to carry the new digital services for a considerable time.

Criterion 5 – Channel planning considerations

Current channelization and interference rules will initially be important constraints even if studies and developments enable changes to be made in the future through the correct regulatory process.

System possibilities therefore need at least to be evaluated against existing rules for bandwidth occupancy, out-of-band emissions, spurious emissions, interference effects etc.

Criterion 6 – Single frequency network operation

The ability of any new system to operate as a single frequency network needs to be assessed. Many broadcasters consider this to be a desirable feature.

Criterion 7 – Receiver cost and complexity

The possibility of both basic and advanced receivers needs to be considered. The receiver cost is obviously related to other criteria – an approximate cost estimate will be required for each criterion and variant.

Criterion 8 – Interference

The subjective and objective audio quality of the system operating with co- and/or adjacent channel interference from either digital or analogue sources. This should take into account both the ability of the signal to overcome interference in its own service areas and its propensity to interfere with other broadcasts outside it.

Criterion 9 – Rapid tuning and channel acquisition

Listeners are accustomed to little or no delay when switching on or tuning a radio receiver. The system design must therefore address:

- the ease with which the listener can select the wanted station or signal;
- the speed to acknowledge a request to select or change a channel;
- the speed to acquire audio lock;
- gaps (if any) in the audio signal when changing to an alternative or stronger source of the wanted signal.

Criterion 10 – Compatibility with existing analogue formats

During the transition phase between the present analogue broadcasting environment and a future digital one, digital and analogue services will have to exist side by side. Certain issues need to be addressed to facilitate this:

- co- and adjacent channel interference (see Criterion 8 above);
- the ability for broadcasters to retain existing analogue audiences through simulcasting while the digital receiver base is built up;
- the ability for the digital system to operate within existing regulatory constraints.

Criterion 11 – Spectrum efficiency

The system should offer more efficient use of the radio spectrum than existing analogue services. A more spectrally efficient system will offer equivalent performance in a lower bandwidth or better performance in the same bandwidth.

Criterion 12 – Single standard

It is accepted that any system will benefit from optimized parameters for use in different frequency bands or under different propagation conditions; ground wave and sky wave for example.

A single standard will, however:

- use the same fundamental building blocks (e.g. audio coding system) albeit with potentially different operational parameters (e.g. bit rate) for different propagation circumstances;
- allow a receiver design that will accommodate all modes of operation automatically without undue replication of facilities.

Criterion 13 – Bench marking with existing AM services

A set of representative measurements to be taken of existing analogue systems so that meaningful comparisons can be made with the systems under test.

Criterion 14 – Data broadcasting

The ability to carry additional data services alongside or even instead of audio services. Such data services might or might not be related to the audio service.

Criterion 15 – Modularity

The capability of being adapted to a larger bandwidth, step by step, channel bundling.

2 Definitions of the characteristics on which test measurements should be made

2.1 E_b/N_0 at BER = 1×10^{-4}

The bit error rate (BER) threshold of 1×10^{-4} has been defined in order to provide a "transparent" transmission channel for guaranteeing the audio integrity. The transmitted signal is adjusted so that the received BER after error correction is better than 1×10^{-4} and then a measure is taken of the E_b/N_0.

Alternatively measurement can be taken above and below this threshold and the E_b/N_0 at a BER = 1×10^{-4} is obtained by interpolation.

2.2 Doppler shift, Doppler spread and delay spread

Doppler shift, Doppler spread and delay spread are three propagation conditions encountered that may affect reception:

- Doppler shift refers to a frequency difference between a received and emitted signal because of relative motion between source and receiver. Sky-wave propagation can also cause frequency shift;

- Doppler spread refers to the maximum difference between Doppler shifts when there is more than one signal received via different transmission paths;
- delay spread refers to the maximum difference in arrival times at the receiver when there is more than one signal received via different transmission paths.

2.3 Co- and adjacent channel interference (all combinations)

It will be necessary to have values of protection ratios for the cases of:

- digital signals interfering with digital signals;
- digital signals interfering with analogue signals;
- analogue signals interfering with digital signals.

2.4 Synchronization and access (signal acquisition)

The listener does not want to have to wait for a long time while the receiver is synchronizing with the received signal in order to give access to the service. So it is necessary to measure the time between power on and listening to the programme.

2.5 Receiver complexity/power consumption/cost

One of the most important considerations will be the manufacturing cost of the consumer receiver which will be influenced by the system complexity. The complexity of the chipset, and so its cost, is a criterion of choosing the best way to realize a function (demodulation, channel decoding, error protection, etc.).

2.6 Transmitter efficiency

Average power out of the transmitter/average power into the transmitter. How much power is needed for the same coverage as the analogue transmission?

2.7 Audio quality at maximum bit rate

In a standard channel, with the lower protection scheme, it is possible to broadcast the best audio quality (maximum bit rate allocated to the compressed audio).

2.8 Top audio quality for hierarchical system

It is possible to have more than one protection scheme for the data (including audio data). The least protected will provide the highest audio quality in the best transmission conditions.

2.9 Minimum audio quality for hierarchical system

It is possible to have more than one protection scheme for the data (including audio data). The most highly protected will guarantee the availability of the signal in the worst transmission conditions.

2.10 Audio quality for analogue modulation

The broadcasting of the digital signal must not disturb the analogue signal broadcast either in the same channel (simulcast) or in the adjacent channels (multicast or different content).

2.11 Speech coding

In the output requirements some broadcasters requested to have several languages (speech only content) broadcast at the same time with dedicated speech encoding. It is necessary to check that the system is able to manage this multi-language broadcasting capability.

2.12 Transition from AM to digital

The proposed system has to be capable of managing a smooth transition between full analogue and full digital broadcasting. This includes simulcast and multicast capability.

2.13 Comparison with AM for LF, MF and HF

In any case the digital system has to provide improvements to the analogue one. So it is necessary to compare all the measurable parameters such as coverage, reliability of the signal, availability of the signal, audio quality (bandwidth, dynamic range, distortion, etc.) in all the AM bands.

2.14 Realistic simulcast possibility

Several broadcasters who have only one channel available will need to broadcast at the same time analogue and digital signals (simulcast).

Evaluation criteria No. 1 to No. 15

1: Unimpaired codec audio quality
2: Transmission circuit reliability
3: Coverage area and graceful degradation
4: Compatibility with new and existing transmitters
5: Channel planning considerations
6: Single frequency network operation
7: Receiver cost and complexity
8: Interference
9: Rapid tuning and channel acquisition
10: Compatibility with existing analogue formats
11: Spectrum efficiency
12: Single standard
13: Bench marking with existing AM services
14: Data broadcasting
15: Modularity

§	System test measurements	No. 1	No. 2	No. 3	No. 4	No. 5	No. 6	No. 7	No. 8	No. 9	No. 10	No. 11	No. 12	No. 13	No. 14	No. 15
2.1	E_b/N_0 at BER = 1×10^{-4}		x	x				x	x	x				x	x	
2.2	Doppler shift, Doppler spread and delay spread		x	x			x	x						x		
2.3	Co- and adjacent channel interference (all combinations)		x	x	x	x	x	x	x	x	x	x		x	x	x
2.4	Synchronization and access (signal acquisition)		x	x			x	x	x	x				x	x	x
2.5	Receiver complexity/power consumption/cost	x	x	x			x	x	x	x	x		x	x	x	
2.6	Transmitter efficiency		x	x	x		x		x		x	x		x		x
2.7	Audio quality at maximum bit rate	x	x	x		x	x	x						x		
2.8	Top audio quality for hierarchical system	x	x	x				x								
2.9	Minimum audio quality for hierarchical system	x	x	x				x								
2.10	Audio quality for analogue modulation	x	x	x			x	x	x	x						
2.11	Speech coding	x	x	x			x	x	x				x	x		
2.12	Transition from AM to digital			x	x	x	x	x	x		x	x	x			x
2.13	Comparison with AM for LF, MF and HF	x	x	x			x		x	x		x	x	x	x	x
2.14	Realistic simulcast possibility	x		x	x	x	x	x	x	x	x	x	x	x	x	x

ANNEX 4

Summary of the performance (see Note 1) of the DRM system based on the criteria contained in Annex 3

NOTE 1 – This Annex provides a summary of the DRM system's performance based on the results of laboratory and field tests referenced in Appendix 1.

1 Unimpaired audio codec quality

The DRM system uses AAC and CELP source coding, with an augmentation option of the AAC by SBR. With the exception of the augmentation, the performance of these codecs at the bit rates used by the DRM system is documented elsewhere. The performance measurements include subjective listening experiments using Recommendation ITU-R BS.1284. This Recommendation defines a 5-grade scale from bad 1 to excellent 5 for the evaluation.

The system's unimpaired quality for AAC is noticeably superior to that of double sideband analogue quality. As a point of reference, the AAC at 24 kbit/s attains a subjective listening level of 4.2 for music, whereas the unimpaired analogue modulation attains a level of less than 3 for the same audio input. This provides a significant improvement over the performance level of current AM broadcasts. The enhancement accomplished using AAC + SBR further increases this difference in performance making it comparable to monophonic FM.

2 Transmission circuit reliability

The robustness of the DRM system was determined using a variety of propagation conditions both in the laboratory and in the field.

The propagation conditions simulated in the laboratory were based upon several years of observation of multipath, etc. conditions by various investigators. This included the measurements on propagation made early in 2000 by DRM system developers for a variety of ionospheric propagation paths ranging from short distances to over 15 000 km. This ensured that sky-wave propagation could be adequately represented in the laboratory models.

A further extensive series of field tests were carried out during July and August using a DRM system prototype. Propagation paths were arranged to use a variety of conditions that would be encountered during normal broadcast operations.

On the tested circuits, both the delay spread and the frequency dispersion challenged the narrow-band OFDM signal. No deterioration in system performance could be identified however, with respect to excessive values of Doppler or delay spread. Consequently, it can be assumed that the system design limits were not exceeded and are adequate for the purpose.

As described in the field test section, the repetitive test sequence included standard double sideband analogue transmissions and several digital transmission modes. These digital modes used different levels of digital modulation (16- and 64-QAM) and error correction bit allocations. In all cases the signals were transmitted within a 10 kHz bandwidth for short-wave transmissions and within a 9 kHz bandwidth for medium-wave transmissions. It was therefore possible to compare the performance of the different modes with each other and with analogue transmissions for each path.

The performance of the digital transmissions was significantly better than the analogue transmissions, in the sense of maintaining the original audio quality, under noise and multipath conditions that frequently made the analogue reception unattractive to a listener.

There are two primary reasons for this:

- The digital signal can survive a certain degree of co-channel and adjacent channel interference, the limits of which are stated in the laboratory test report. Down to these limits of the signal-to-interference ratio, the audio quality remains completely unimpaired.

- The OFDM signal can counter selective fading very well and, in combination with time interleaving and error correction techniques, permits a high level of uninterrupted performance under those kind of multipath conditions that cause "self-generated" interference.

Generally, when a digital receiver actually experiences a dropout detectable by a human, the analogue signal reception is very poor.

3 Coverage area and graceful degradation

Medium wave coverage using ground wave propagation was as expected. That is, coverage is at least as good as that for analogue modulation at transmitted power levels of the order of 5 dB less than that of an analogue signal.

For reasons described in § 4, digital power should be held to be around 7 dB less than that of analogue transmissions under typical situations connected with channel planning in the medium wave band. Therefore, it can be concluded that DRM system coverage capability for use within the medium wave band will be similar to that which currently exists for analogue transmissions.

The short wave field tests were carried out using the nominal transmitter power rating for the AM sequences. For the digital sequences the average power level was 10 dB below the transmitter peak envelope power. The value of 10 dB is a result of the crest factor, which is a DRM system parameter. Since in AM operation, the average output power generally is 6 dB below the PEP the average DRM system output is 4 dB less than AM power for a comparable situation.

Short wave coverage has been estimated by the use of the analogue and digital reception data associated with the field tests conducted during July and August 2000. These "point estimates" in space/time show that useful coverage using the DRM system design results in coverage at least as great as that for analogue reception using digital transmission power roughly 4 dB less than analogue transmission.

The DRM system includes a number of digital modulation modes to enable the transmission operator to select a mode with a degree of robustness best suited to the expected propagation. The receivers will be capable of automatically detecting which mode is in use.

The test sequence included two levels of modulation (64- and 16-QAM). As expected, the results show that the more robust 16-QAM signal, with added error protection and correction, could perform better than the 64-QAM signal at lower signal to noise ratios and under more difficult propagation conditions.

4 Compatibility with new and existing transmitters

The field tests, conducted since December 1999, involved the use of four Class C and one linear short-wave transmitter, and one linear medium wave transmitter. The Class C transmitters were of three different manufacturers. Each of these was able to accept the OFDM signal and transmit it.

Linear transmitters are able to accept the OFDM signal at their input and amplify and transmit the signal directly. However non-linear transmitters require the OFDM signal to be generated at the output of the transmitter by applying separate amplitude and phase signals to the transmitter. To ensure the OFDM signal is correctly generated the two paths through the transmitter must be time aligned and this is generally achieved by delaying the amplitude signal with respect to the phase signal before its application to the transmitter.

The generated OFDM signal has a spectrum that has approximately constant spectral density within the chosen 9 or 10 kHz channel. The signal level then rapidly falls off at the upper and lower bounds (the "shoulders") of the channel. This fall off level has been measured as 35 dB during the trials, and for optimized transmitter systems this level will be 50 dB below the peak value.

The "shoulder" attenuation depends on the type and design of the transmitter. In general the most rapid shoulder attenuation is obtained from the most modern non-linear transmitters, as they have wider modulator bandwidth (usually using a solid state modulator) and better linearity. These are the two most important factors in determining the transmitted spectrum shape.

5 Channel planning considerations

This criterion and Criterion 8 (§ 8 – Interference) are closely related. A more detailed discussion is given there.

Based upon the measurements made in the laboratory and the analysis of them, it can be concluded that, with proper consideration of digital power levels, analogue and digital signals can "co-exist" in the same band. In other words, protection ratios are such that a 10 kHz digital signal can be accommodated within a short wave band and a 9 kHz signal within the medium wave band.

There are several possibilities within the totality of the short wave broadcasting bands, however, that should be carefully studied in so far as the introduction of a digital service is concerned. As an example, in addition to permitting digital audio to occupy channels adjacent to analogue audio, it may turn out to be desirable to dedicate a portion of a short wave sub-band to digital audio.

6 Single frequency network operation

No testing was conducted associated with this criterion, nevertheless as this system is based on an OFDM system with a guard interval it is implicitly suited for single frequency network operation. This OFDM capability has been demonstrated during the past several years with other systems in other spectral bands. Special care has to be taken during the network planning however, to ensure that the delay differences between all transmitted signals towards the service area are within the system design limits.

7 Receiver cost and complexity

For consumer marketing reasons, digital reception capability for these frequency bands is expected to be incorporated as part of a receiver, and not as a sole, stand alone receiver. This is an extension to the typical radio of today that includes AM and FM bands.

Therefore, the antenna, front end, speakers, and casing are, in a sense, multipurpose. The digital signal functionality for the AM bands becomes a "value added" feature of the receiver. Its complexity lies in the digital processing required. It is anticipated that the DRM system processing can reside in one "chip". This might include employing developments made in other digital broadcast and transmission fields in order to use as many common elements as possible.

8 Interference

Careful tests were made in the laboratory to establish a basis to obtain quantitative data on the usual interference variables:

- co-channel and adjacent channel for
- digital-to-digital, analogue-to-digital and digital-to-analogue. (Detailed results of the tests and related analysis are presented in Document 6-6/6, 15 September 2000, on pages 19-37, Section 3.3.3.2.).

The key result is this: the necessary protection ratios applicable to interference to DRM from analogue, from DRM to analogue and between DRM signals are related to the existing analogue-analogue protection ratios in such a way that the following is possible. The permitted power level of an existing or hypothetical analogue transmission which respects existing established analogue protection criteria is first determined. If this analogue transmission is then replaced by a DRM signal whose power level is 7 dB lower, then other existing transmissions will neither receive nor cause unacceptable interference. This simple procedure is derived from the extensive measurements referenced in Appendix 1, [4].

It may be noted that the digital signals are somewhat more robust, and hence require lower protection ratios than the values required for analogue-to-analogue protection.

9 Rapid tuning and channel acquisition

Ground wave medium wave reception requires only 800 ms time interleaving. Therefore, due to the signal structure with the three different channels for signalling and data it needs an average of 1.6 s for the acquisition until audio is delivered.

Sky wave mode reception on short wave uses a time interleaving of about 2.4 s to be applied to the transmitted data to mitigate audio distortions that would otherwise be caused by the varying transmission channel. Due to this longer interleave and more difficult propagation channels the average acquisition time will be 3.6 s until audio can be delivered. A station label transmitted in the signalling data section can be decoded after typically 1.6 s however.

10 Compatibility with existing analogue formats

The aspects of this criterion are considered in Sections 8, 11, and 15.

11 Spectrum efficiency

The designers of the DRM system have adhered to the need to contain a digital signal to within its assigned channel bandwidth. The shoulders at the edge of the assigned channel are very steep, and the power spectral density rapidly reaches a level more than 35 dB below that within the assigned channel. This directly helps with spectral efficiency because interference beyond a 4.5/5 kHz separation from the channel centre is minimized.

Currently the ITU-R's master register of seasonal short wave transmission includes more than one transmission for the same program into a target area for some broadcasts. This is done to increase the chance of a good reception signal. The more robust digital audio should eventually reduce this need. This will be a major factor in spectral efficiency improvement. It must be recognized, however, that during an introductory period for digital reception, a significant amount of analogue short wave transmission will continue to be required because there will only be a small base of digital receivers. Thus, this major improvement in spectral efficiency, although it will be real, will not be realized in the near term.

For both medium wave and some aspects of short wave broadcasting, the single frequency network concept is attractive for certain markets. This is another potential spectral efficiency gain and, as the one mentioned above, it will only be realizable when the digital receiver population in the target broadcast area has reached a high level.

12 Single standard

The DRM system includes multiple modes of operation for different broadcasting conditions. This permits a single standard to be denoted for digital broadcasting in the bands below 30 MHz.

13 Bench marking with existing AM services

As described throughout this summary report, the performance of the DRM system has been compared to that of double sideband AM within the same channel bandwidths.

14 Data broadcasting

Reference is made to the summary system description for the DRM system and the more detailed draft system specification that was submitted to the ITU-R in January 2000. They note the range of

data throughput possible with the DRM system within a 9/10 kHz channel. In effect this capability, that is inherent in the design, is part of a trade-off between audio quality, robustness and the available capacity for data broadcasting. The system allows a range of data rates that can use between 0 and 100% of the transmitted net data capacity.

15 Modularity

The DRM system design also contains means to take advantage of larger channel bandwidths should this opportunity be available in the future. In particular, the availability of 18/20 kHz bandwidths per channel would significantly increase the audio quality and data broadcasting potential.

ANNEX 5

Summary of the performance (see Note 1) of the IBOC DSB system based on the criteria contained in Annex 3

NOTE 1 – This Annex provides a summary of the IBOC DSB system's performance based on the results of laboratory and field tests referenced in Appendix 1.

1 Unimpaired audio codec quality

The IBOC DSB system uses AAC source coding augmented by SBR. Because the performance and quality of AAC have been adequately documented elsewhere, no further analysis of this issue has been provided.

2 Transmission circuit reliability

The IBOC DSB system incorporates extensive redundancy to enhance circuit reliability. The digital system includes fully redundant sidebands on each side of the analogue signal. This allows for transmission of identical digital information on each side of the existing analogue signal. Thus, the loss of either sideband will not result in the total loss of the signal. This is particularly useful for increasing resistance to adjacent channel interference. The system's placement of carriers is also designed to promote greater reliability. In the all-digital system the digital subcarriers placed immediately adjacent to the main carrier constitute the "core" carriers and are able to deliver 20 kbit/s of digital information. The outer digital carriers on either side farthest away from the main carrier comprise the "enhanced" system. When operating in the enhanced mode, the system is able to deliver 36 kbit/s of digital information. This flexible approach ensures the reliable reception of, at minimum, the core information and, in more favorable conditions, the enhanced level of information.

3 Coverage area and graceful degradation

The field tests of the IBOC DSB system conducted in Cincinnati, Ohio, demonstrate the extensive coverage area of the MF hybrid system. Overall, the system coverage in the field was demonstrated to extend approximately 90 km from the transmitter. The field strength where the system begins to blend frequently from digital to the back-up analogue signal is approximately at 1 mV/m. The signal no longer blends back to digital at approximately 0.6 mV/m. Because the IBOC DSB system incorporates the analogue signal as a back-up and allows for seamless blending between the digital and analogue signal, the system always will provide coverage at least as great as that provided by the existing analogue signal. The Cincinnati tests confirm the system's ability to maintain coverage until the loss of analogue coverage. The tests also confirm the extensive and reliable digital signal for much of the system's coverage area.

The IBOC DSB system also incorporates a blend function to switch between the digital and analogue signals built into the system. At a certain error rate, the modem gracefully blends from the digital signal to the analogue signal to maintain continued coverage. This blend function enhances coverage in two ways. First, it extends coverage in areas where analogue coverage may exceed the coverage of the digital signal. The blend feature, combined with the back-up analogue makes it possible to extend coverage without annoying distortions for the listeners. Second, the blend function provides a means for graceful degradation of the digital signal. The blend to analogue avoids the "cliff effect" common to many digital signals where a loss of the signal leads to an abrupt loss of coverage. The IBOC DSB system's blend function permits a graceful degradation both at the edge of digital coverage and where impairments or interference corrupt the digital signal at an area closer to the transmitter.

4 Compatibility with new and existing transmitters

The IBOC DSB system has been tested using a variety of commercially available transmitters. The field tests conducted in Cincinnati, Ohio, used an existing commercial transmitter. Similar tests have been conducted using transmitters of two other manufacturers, all of which have exhibited full compatibility with the IBOC DSB system. Almost all existing transmitter manufacturers have analysed the attributes of the IBOC DSB system and determined the system's compatibility with existing transmitters as well as transmitters under development.

5 Channel planning considerations

The IBOC DSB system operating in the hybrid mode is designed to enable simultaneous transmission of the analogue and digital signal in the same band. This will have no impact on existing channel planning for a 9 kHz or 10 kHz MF signal.

6 Single frequency network operation

The IBOC DSB system was not tested using a single frequency network. Nonetheless, the OFDM system is easily adapted for SFN operation consistent with other SFN systems that have been implemented.

7 Receiver cost and complexity

The IBOC DSB system integrates digital radio for operation both in the MF band and in the VHF/FM band. This will allow manufacturers to include the IBOC DSB system for operation in the MF band at only a marginal cost above that required for VHF/FM band digital radio. This will mirror the existing cost structure for AM/FM radios.

8 Interference

The IBOC DSB system is designed to permit the introduction of the digital signal while minimizing the impact on existing analogue signals. Simulations and testing of actual system hardware demonstrate the system's ability to withstand co- and adjacent channel interference.

9 Rapid tuning and channel acquisition

The IBOC DSB provides instant channel acquisition and tuning. The system incorporates a blend feature between the main digital signal and a back-up analogue signal. Upon tuning to a station, the receiver immediately acquires the analogue signal. The system then gracefully blends to full digital performance. This blend feature ensures immediate acquisition and continuation of the rapid channel acquisition listeners have come to expect from analogue broadcasts.

In the all-digital mode, fast tuning is accomplished by using a backup digital signal. This signal can be acquired as fast as 0.2 ms depending on the implementation.

10 Compatibility with existing analogue formats

The IBOC DSB system is designed to ensure a smooth transition for the introduction of digital radio without the need for new spectrum or the need to eliminate analogue broadcasts. The hybrid system provides full compatibility of the digital broadcast with the host analogue signal as well as co- and adjacent channel station digital and analogue signals. The ability to support analogue and digital broadcasting on the same channel will allow broadcasters to simulcast programming during the transition to digital broadcasting. This will allow broadcasters to introduce digital broadcasting without jeopardizing their existing audience and will allow regulators to adopt digital broadcasting without the need for new frequency allocations or the issuance of new station licenses.

11 Spectrum efficiency

The IBOC DSB system's ability to support digital broadcasting without impact to the existing analogue signal is inherently spectrally efficient. Using the existing bandwidth of MF broadcasts, the IBOC DSB system is able to offer enhanced audio quality and improved robustness over that provided with existing analogue systems.

12 Single standard

The IBOC DSB system provides flexibility to operate in different modes to accommodate the needs of listeners in different regions. In addition, the IBOC DSB system is compatible with the IBOC DSB system in the VHF/FM band. Thus the system is able to serve as a standard for DSB operating below 30 MHz.

13 Bench marking with existing AM services

The IBOC DSB system has been field tested in comparison with existing MF broadcasts in the United States of America operating in the same channel as the IBOC DSB system. Those tests have demonstrated the benefits offered by the IBOC DSB system.

14 Data broadcasting

The IBOC DSB system incorporates several options for data broadcasting. The system design permits the broadcast of programme associated data as a replacement for existing analogue radio data services. The system also has capacity for 4 to 16 kbit/s of data broadcasting, depending on conditions within the service area. The system design provides sufficient flexibility to allow broadcasters to further enhance the data broadcasting capabilities depending on the trade-offs made concerning audio quality and reliability.

15 Modularity

The IBOC DSB system incorporates sufficient flexibility to take advantage of wider bandwidth, should it become available.

APPENDIX 1

References and Bibiography

ITU-R Call for Proposals, referred to in *considering* k), and the source of the evaluation criteria reproduced in Annex 3:

[1] ITU-R Circular Letter 10/LCCE/39.

Two proposals responding to the Call for Proposals, including functional design specifications, as mentioned in *considering* k) and o):

[2] Document 10-6/10 (17 January 2000). DRM proposal for a digital radio system for application in the broadcasting bands below 30 MHz. (Source: DRM.)

[3] Document 10-6/12 (21 January 2000). IBOC DSB system for operation below 30 MHz. (Source: United States of America.)

Brief system descriptions and full reports of the results of laboratory and field tests supplied by the two proponents in response to the Call for Proposals, mentioned in *considering* k) and p), and of which Annexes 4 and 5 are condensed versions:

[4] Document 6-6/6 (15 September 2000). Summary description of DRM system and laboratory and field tests. (Source: DRM.)

[5] Document 6-6/7 (11 October 2000). IBOC DSB system for operation below 30 MHz. (Source: United States of America.)

Other relevant ITU-R documentation:

[6] Document 10/128, 11/206 (13 April 2000). System recommendation for digital sound broadcasting at frequencies below 30 MHz.

[7] Document 10-6/17 (12 April 2000). Chairman's Report of TG 10/6 meeting held in Geneva, 25-27 January 2000.