BOSTON
CHICAGO
FRANKFURT
HAMBURG
HONG KONG
LONDON
LOS ANGELES
MOSCOW
NEW JERSEY

Latham & Watkins
ATTORNEYS AT LAW
WWW.LW.COM

NEW YORK
NORTHERN VIRGINIA
ORANGE COUNTY
SAN DIEGO
SAN FRANCISCO
SILICON VALLEY
SINGAPORE
TOKYO
WASHINGTON, D.C.

ORIGINAL

June 25, 2001

EX PARTE OR LATE FILED

RECEIVED

JUN 25 2001

FEDERAL COMMUNICATIONS COMMISSION
OFFICE OF THE SECRETARY

BY HAND DELIVERY

Ms. Eloise Gore
Cable Services Bureau
Federal Communications Commission
445 Twelfth Street, S.W.
Washington, D.C. 20554

Re: DIRECTV, Inc.; CS Docket Nos. 00-96, 99-363; EX PARTE

Dear Ms. Gore:

On behalf of DIRECTV, Inc. ("DIRECTV"), this letter addresses certain questions raised and provides supplemental information requested by the staff of the Cable Services Bureau during a meeting with DIRECTV representatives on June 1, 2001.

Good Quality Signal

Q: *DIRECTV has urged that a "good quality signal" in the satellite carrier context be defined by the Commission as one meeting the requirements of GRE-338 CORE, TV-1 <20 route miles, and argued that the Commission should not simply incorporate the off-air standard from the cable television must carry regime. Can this proposed TV-1 standard be met via over-the-air transmission?*

A: DIRECTV believes that a number of broadcast stations can come close to achieving a TV-1 quality signal via off-air transmission. A direct TV-1 quality fiber link from a station's master control to a DIRECTV local receive facility will have a 67dB signal-to-noise ratio. In attempting to meet such a standard, a station transmitting its signal over the air will need to improve its "as-received" signal-to-noise ratio. If a strong, high quality broadcast signal is received at DIRECTV's local receive facility, DIRECTV believes that a signal-to-noise ratio of approximately 60 dB is achievable by the broadcaster with the addition of commercial noise reduction equipment that is relatively inexpensive. It is also possible that additional equipment would not have to be added by the broadcaster, since DIRECTV provides commercial noise reduction and ghost canceling equipment as a part of its system design. Noise can be reduced further by concatenating additional equipment or by operating the same equipment at more

555 ELEVENTH STREET, N.W., SUITE 1000 • WASHINGTON, D.C. 20004-1304
TELEPHONE: (202) 637-2200 • FAX: (202) 637-2201

No. of Copies rec'd 0+1
List ABCDE

aggressive settings. While a 60 dB signal-to-noise ratio admittedly is slightly less than a TV-1 standard in terms of signal quality, it is close enough to TV-1 (and superior enough to the cable off-air standard adopted in the current rule) to be an acceptable compromise for stations attempting to provide a "good quality signal" over the air for purposes of satellite carrier retransmission.

Stations with weaker off-air signals at the local receive facility may not be able to meet the TV-1 (or 60 dB) standard via off-air transmission. For these stations, TV-1 signal quality can be achieved either through terrestrial microwave or fiber optic cable transmission at minimal cost. For example, as DIRECTV has pointed out, the broadcasters themselves have estimated that the average cost of leasing a TV-1 line is $1,150/month, or $13,800 per year. Using the broadcasters' estimate, it is difficult to characterize a yearly expense of approximately $14,000 in order to secure satellite carriage throughout the DMA as unfair or prohibitively expensive.[1]

It bears reiterating that a "good quality signal" for satellite carriage purposes is not and should not mean the same thing as a "good quality signal" in the cable carriage context. As opposed to the poorer picture and sound quality provided by analog cable systems, DBS systems are entirely digital and offer noticeably clearer pictures and better sound to subscribers as a *standard* feature of the service. Congress knew this when it enacted the SHVIA, and the fundamental underpinning of the local-into-local regime set up by the SHVIA is the notion that satellite carriers should be given every opportunity to compete as vigorously as possible with incumbent cable television operators. Therefore, in defining the standard for the "good quality signal" that a broadcaster must provide to a satellite carrier's designated local receive facility, it makes little sense for the Commission to adopt a signal quality standard used by cable operators, which are the very incumbents for whom Congress and the Commission are seeking to promote competition against in terms of price and service, including *signal quality*. It is illogical to conclude that Congress intended the historical quality and competitive benefits associated with high quality satellite-distributed signals to suffer in providing for local-into-local service, or for the local broadcast signal being retransmitted by satellite to be of inferior signal quality relative to *every other channel* being carried on the satellite system.

---

1 In addition, DIRECTV reiterates that the obligation to deliver a good quality signal to the satellite carrier's designated local receive facility is one of the very few requirements that the SHVIA places on broadcasters seeking mandatory carriage, and in this regard, the statute does not place any limits on the expenses that broadcasters are required to bear in order to deliver a good quality signal to the local receive facility. It is therefore not appropriate in any event for the Commission to use such costs as a basis for adopting a less stringent signal quality standard for local broadcasters than is the norm in the context of satellite transmission.

Q: *What is the test method to measure TV-1 signal quality?*

A: Conventional TV test equipment such as the Tektronix VM-700 is used to make an automated measurement. There are several requirements within the TV-1 standard but the most important for this application is signal-to-noise. This would be measured by analyzing the residual noise on an unused line in the vertical interval. With the appropriate weighting filter selected, the resultant signal-to-noise ratio is measured and reported.

The measurement of signal-to-noise is quite simple. In most cases, the measurement can be made during normal programming as an in-service test. Other tests within the TV-1 standard require special test signals (such as a tone to test audio circuits) which can be scheduled during a maintenance window.

Q: *What is the effect on the satellite carrier's compressed digital signals if an inferior signal quality standard (less than TV-1) is adopted?*

A: The fundamental basis for digital video compression is to identify and eliminate redundant picture information. If one frame of video is very similar to the next, only a small amount of "difference" information is required for the second frame. The same concept of sending only the difference is also used to reduce horizontal and vertical information.

Noise is the enemy of compression. Although the picture may have a high degree of redundancy, if noise is present, the video becomes difficult to compress. To a compression system, it is difficult to differentiate between intended activity in a scene and background noise. Excessive background noise will consume valuable transmission capacity thus causing the desired picture to be degraded.

Statistical multiplexing is commonly used to gain the best compression efficiency for multiple channels. If one channel is noisier than the others, it will demand more capacity and cause deterioration or degradation to other local-into-local stations broadcast in the same market. Tests in DIRECTV's lab show that one channel with a 50 dB weighted signal-to-noise ratio will consume 25% more bandwidth than the same program with a 67dB signal-to-noise ratio.

Allocation Of The Costs Between Broadcasters And Satellite Carriers Of Delivering A Good Quality Signal

The current rule requires the broadcaster to provide a certain signal level at the "input terminals of the signal processing equipment." 47 C.F.R. § 76.66(g)(2). In the satellite carriage context, this would mean the input to any signal preamplifiers in the antenna downlead. Thus, the demarcation point for a station to hand off a "good quality signal" must be at the preamplifier input, which in our case is a junction box at the point where the downleads enter the building.

As indicated during the June 1 meeting, DIRECTV wishes to pass through to broadcasters the costs incurred on the broadcaster side of the demarcation point at the local receive facility. These costs would be borne by each broadcaster on a pro rata basis. DIRECTV requests clarification that this is a permissible approach.

Q: *Please supply a schematic or processing diagram laying out the configuration of a sample local receive facility, roof equipment, masts, antennas, down leads, preamplifiers, junction box, connection to the signal processing equipment, etc., for purposes of further understanding DIRECTV's request for clarification on this point.*

A: Rooftop schematics are attached.

By way of further background, DIRECTV has used several criteria in selecting the local receive facility locations in its local channel cities. An ideal site consists of the following:

1. Has good (in the satellite context) to excellent off-air reception for all high power stations in the DMA;

2. Has the ability to lease roof rights for our terrestrial TV and DBS downlink antennas;

3. Is on the trunk network for the long haul fiber provider selected;

4. Has rack space and power available for our collection equipment; and

5. Has a robust and reliable infrastructure for carrying our signals (such as uninterruptable and backed up power sources and physically diverse redundant egress/ingress for the signal paths).

In balancing the above requirements, it is often difficult to meet all of them fully. In surveying its local receive facility locations, DIRECTV spent considerable effort to select locations that have the best off-air reception for the most stations. However, it is usually not possible to find a site that has acceptable off-air reception for all stations in the DMA.

Once DIRECTV has located a site that meets its technical requirements, DIRECTV begins the process of negotiating roof rights and costs. Depending on the city and the physical distribution of the stations' transmitters, DIRECTV may have between one and three antenna masts for its reception needs. These requirements are relayed to DIRECTV's backhaul provider, which enters into an agreement with the building management company and/or the building owner. The process is quite time consuming and complex given the number of disparate organizations involved and their relative interest level.

Once roof rights are negotiated with the building owner, DIRECTV may be required to go through a city permitting process, depending on the locality. After that, there is some building construction required for the mounting of the antenna masts and drilling and running of conduit for the downlead cables. At this point, DIRECTV contracts with a system integration contractor to actually install the antenna masts, the antennas and the junction box.

The non-recurring costs for the process described above vary considerably among cities, and range from $1,000 to $45,000, with the average being $15,000. Average monthly recurring costs for maintaining the antenna system's roof rights would be approximately $2,500. When such costs are prorated among many stations in a market, the recurring and non-recurring charges passed on to each broadcaster would be minimal. For a market with ten stations, for example, using average cost numbers of $15,000 non-recurring costs and $2,500 recurring costs per antenna system, a single station in the market would be charged a one-time, non-recurring charge of $1,500, and a recurring charge of $250 per month.

Q: *Will all of the antennas and other rooftop equipment will be used only for must carry stations?*

A: Rooftop equipment, in fact, will be shared between the must carry and retransmission consent stations. Although DIRECTV's primary method of receipt of its retransmission consent stations is TV-1 fiber, there are a few stations (4 or 5) that have no fiber infrastructure, so DIRECTV is forced to bring in the primary feed off-air. In addition, DIRECTV has configured the off-air receiving equipment to supply a backup off-air feed for all retransmission consent stations in case of a failure on the TV-1 circuit. DIRECTV would prorate the costs to the must carry stations for the off-air equipment based upon ALL of the users (whether primary or backup users). In this sense, must carry stations benefit from the presence of the retransmission consent stations.

Q: *Are DIRECTV's retransmission consent station feeds being aggregated at a central location? Will they be transitioned to the local receive facility now that these have been established?*

A: Currently, all of DIRECTV's retransmission consent signals are aggregated in the local city and backhauled to one of DIRECTV's two broadcast centers in Castle Rock, CO and Los Angeles, CA. Over the next six months, DIRECTV will be transitioning these signals to new equipment in the local channel cities that also has the capability to include the must carry stations, which DIRECTV will "turn on" on January 1, 2002. This new equipment is located at the local receive facility locations identified on DIRECTV's web site. In some cases, this is the same address as the location of DIRECTV's current retransmission consent equipment.

Q: *Will DIRECTV have an uplink in every DMA? If not, how many uplinks will there be, and how are signals transported to the uplinks?*

A: There will be two uplink sites, from DIRECTV's existing broadcast centers in Los Angeles and Castle Rock. Each site will uplink approximately half of DIRECTV's 41 local channel markets. All video compression of local channels will take place at the local receive facility, where all of the signals from stations in the DMA are collected. The encoded and multiplexed signal stream will then be transported to one of the two broadcast uplink centers on a wideband fiber-optic circuit. The signals will then be scrambled for conditional access purposes and uplinked to the satellite.

We hope that this information is responsive to the questions raised. Due to the "real-time" urgency necessitated by the process of establishing local receive facilities in DIRECTV's local channel cities, DIRECTV requests any guidance that the Commission can provide, formal or informal, regarding the cost allocation issues mentioned above as soon as possible.

Thank you for your consideration. Please do not hesitate to contact the undersigned should you or the Bureau require additional information.

Respectfully submitted,

James H. Barker
of LATHAM & WATKINS

Counsel for DIRECTV, Inc.

Attachment

cc: Distribution

TYPICAL DIRECTV
LCF OFF-AIR ANTENNA DESIGN

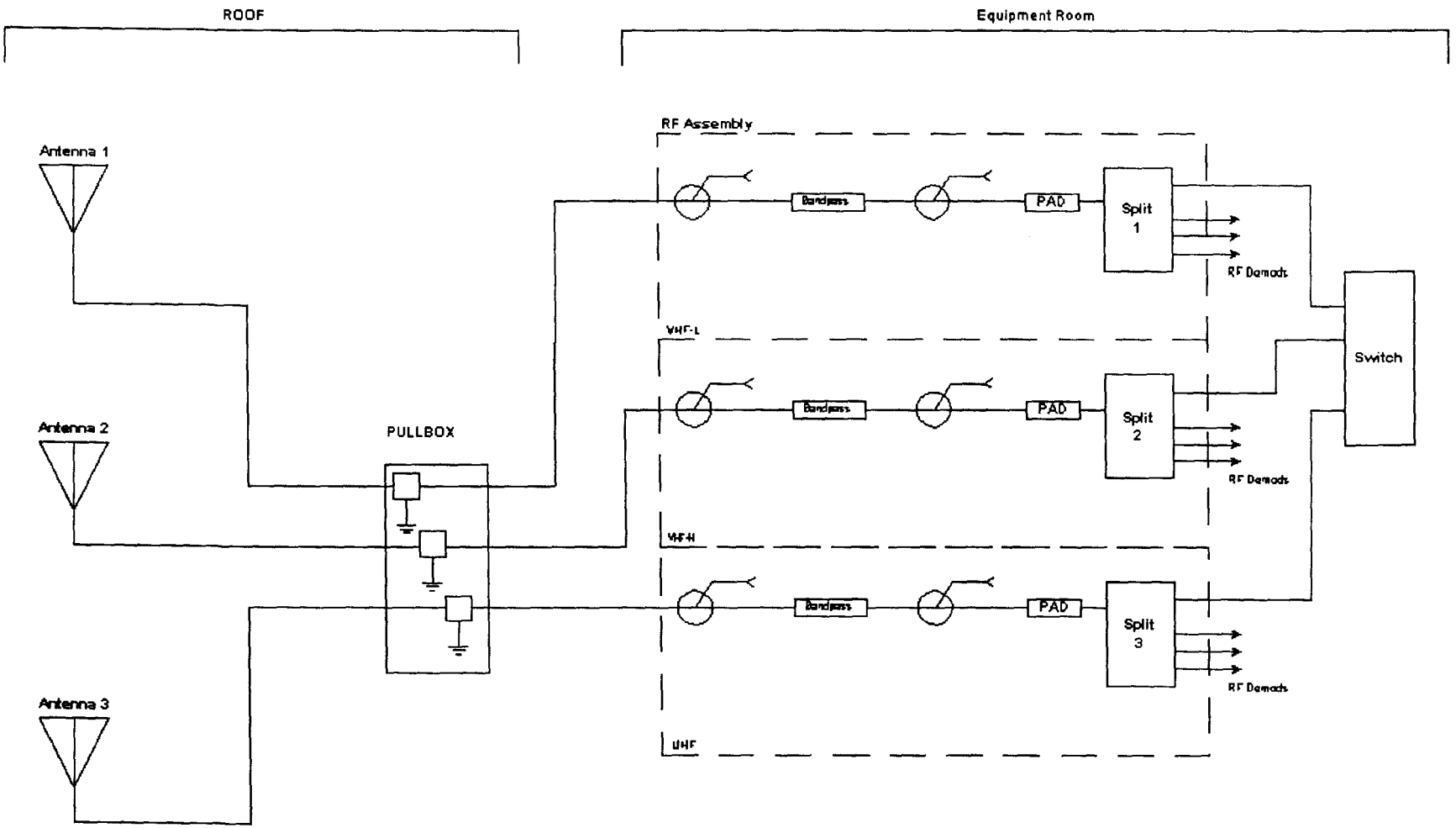

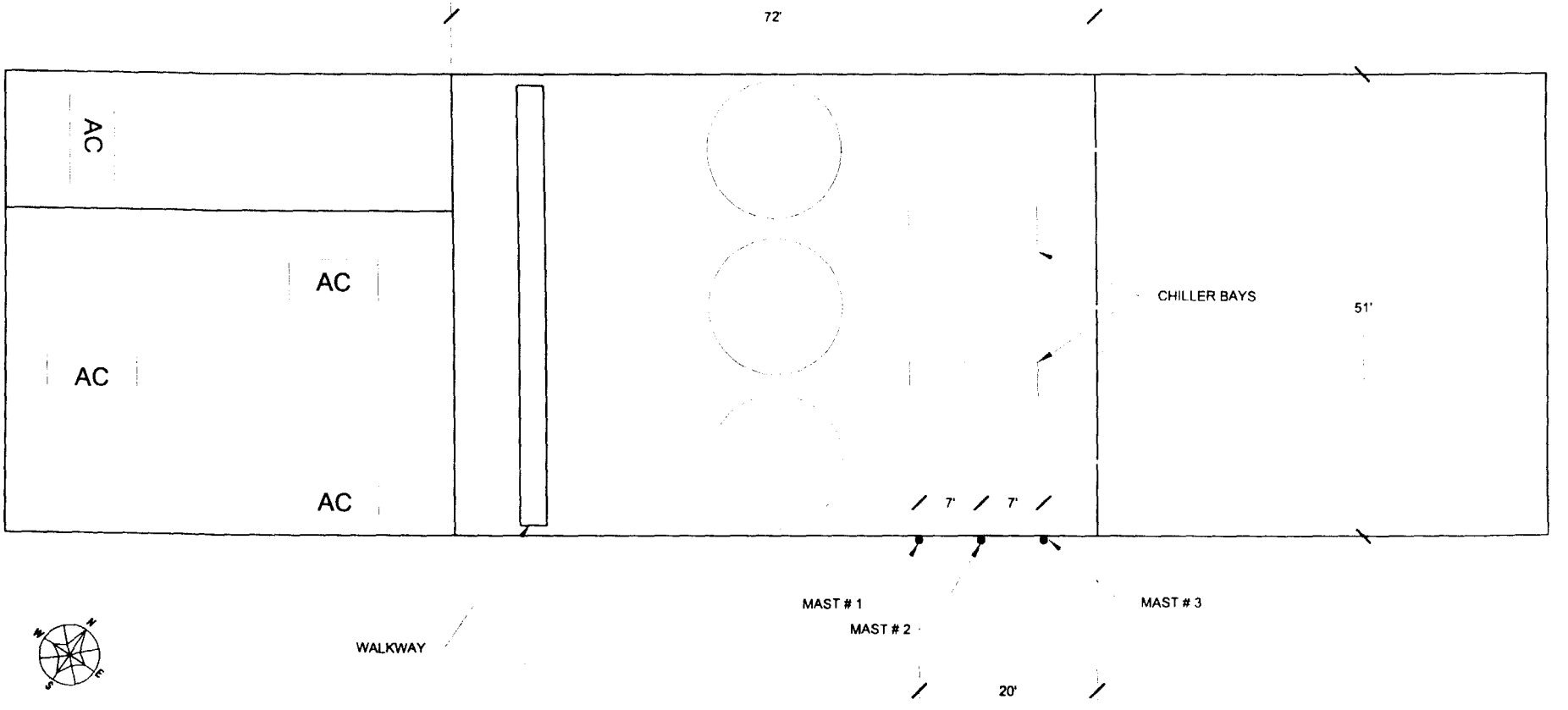

NationalTeleConsultants ENGINEERING FACILITY DESIGN SYSTEM FABRICATION 700 NORTH BRAND BOULEVARD GLENDALE, CALIFORNIA 91203 (818) 265-4400	CLIENT DIRECTV **Spotbeam Ground Segment**	DESIGNED WTS — DATE 22 FEB 01 DRAWN G. ORTIZ — DATE 22 FEB 01 CHECKED G. JONES — DATE 23 FEB 01 APPROVED J. SCHOEDLER — DATE 23 FEB 01 REV — REVISED BY — DATE THE DESIGNS REPRESENTED HEREBY ARE AND SHALL REMAIN THE PROPERTY OF NATIONAL TELECONSULTANTS, INC	TITLE DIRECTV LOCAL COLLECTION FACILITY ROOFTOP LAYOUT and MAST LOCATIONS ATLANTA, GEORGIA SCALE NONE — SHEET 1 OF 1 PROJECT NUMBER 3602 — DRAWING AT-ROOF

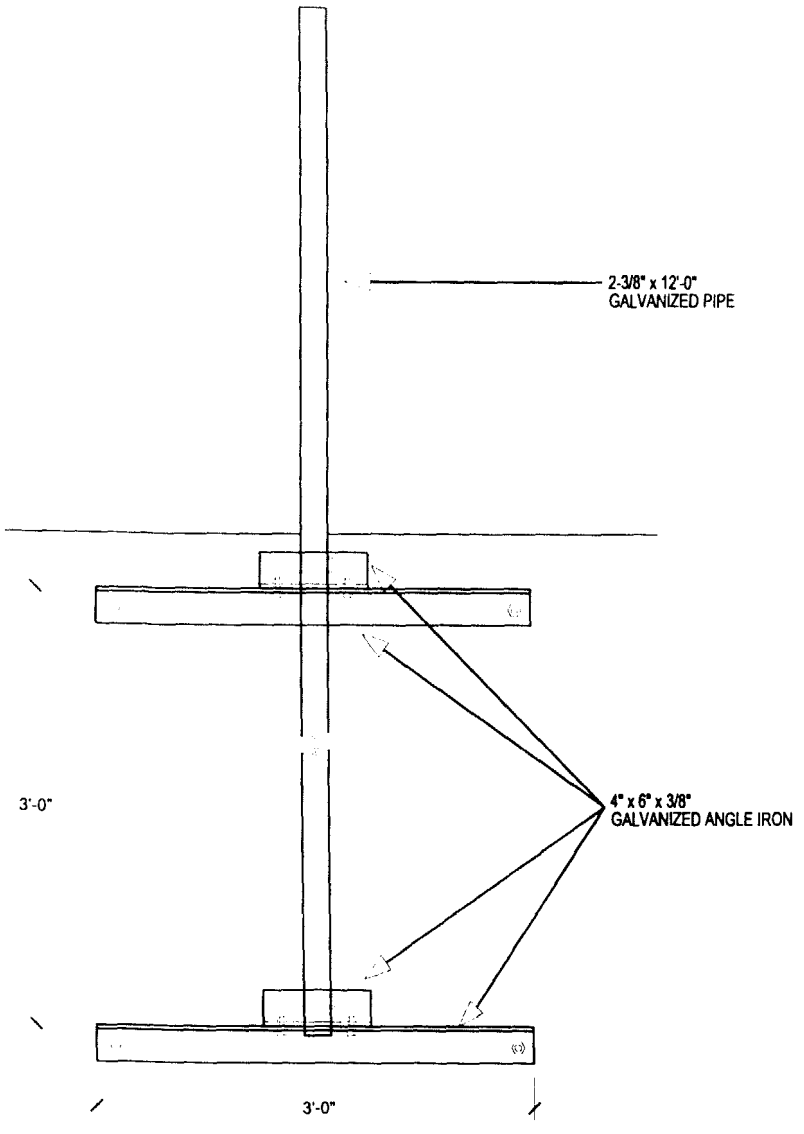

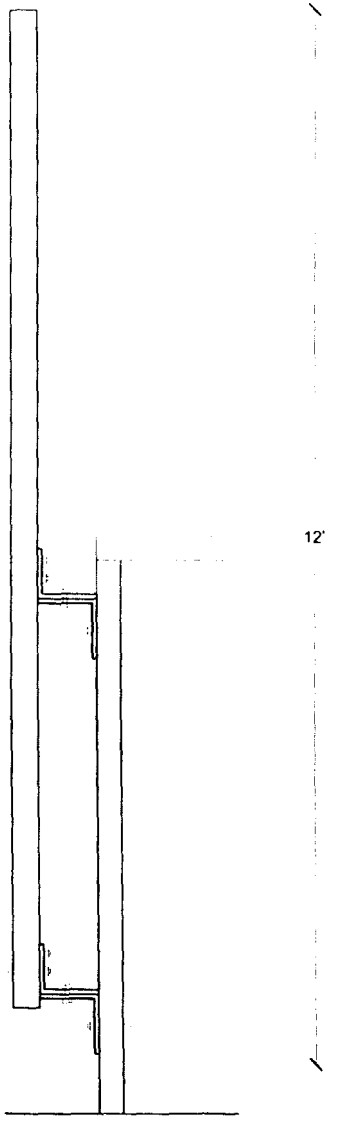

NOTE: MOUNTING METHOD IS SUGGESTED ARRANGEMENT ONLY. ACTUAL MOUNT DETAILS ARE THE RESPONSIBILITY OF THE LOCAL FACILITILTY PROVIDER.

NationalTeleConsultants

ENGINEERING
FACILITY DESIGN
SYSTEM FABRICATION

700 NORTH BRAND BOULEVARD
GLENDALE, CALIFORNIA 91203
(818) 265-4400

CLIENT

DIRECTV

Spotbeam
Ground Segment

DESIGNED	W.T.S.	DATE	06 FEB 01
DRAWN	H. CHAUNCEY	DATE	06 FEB 01
CHECKED		DATE	
APPROVED		DATE	

REV	REVISED BY	DATE

THE DESIGNS REPRESENTED HEREBY ARE AND SHALL REMAIN THE PROPERTY OF NATIONAL TELECONSULTANTS, INC.

TITLE

DIRECTV
LOCAL COLLECTION FACILITY
ANTENNA MAST
MOUNT DETAIL
ATLANTA, GEORGIA

SCALE NONE	SHEET 1 OF 1
PROJECT NUMBER 3602	DRAWING AT - MOUNT

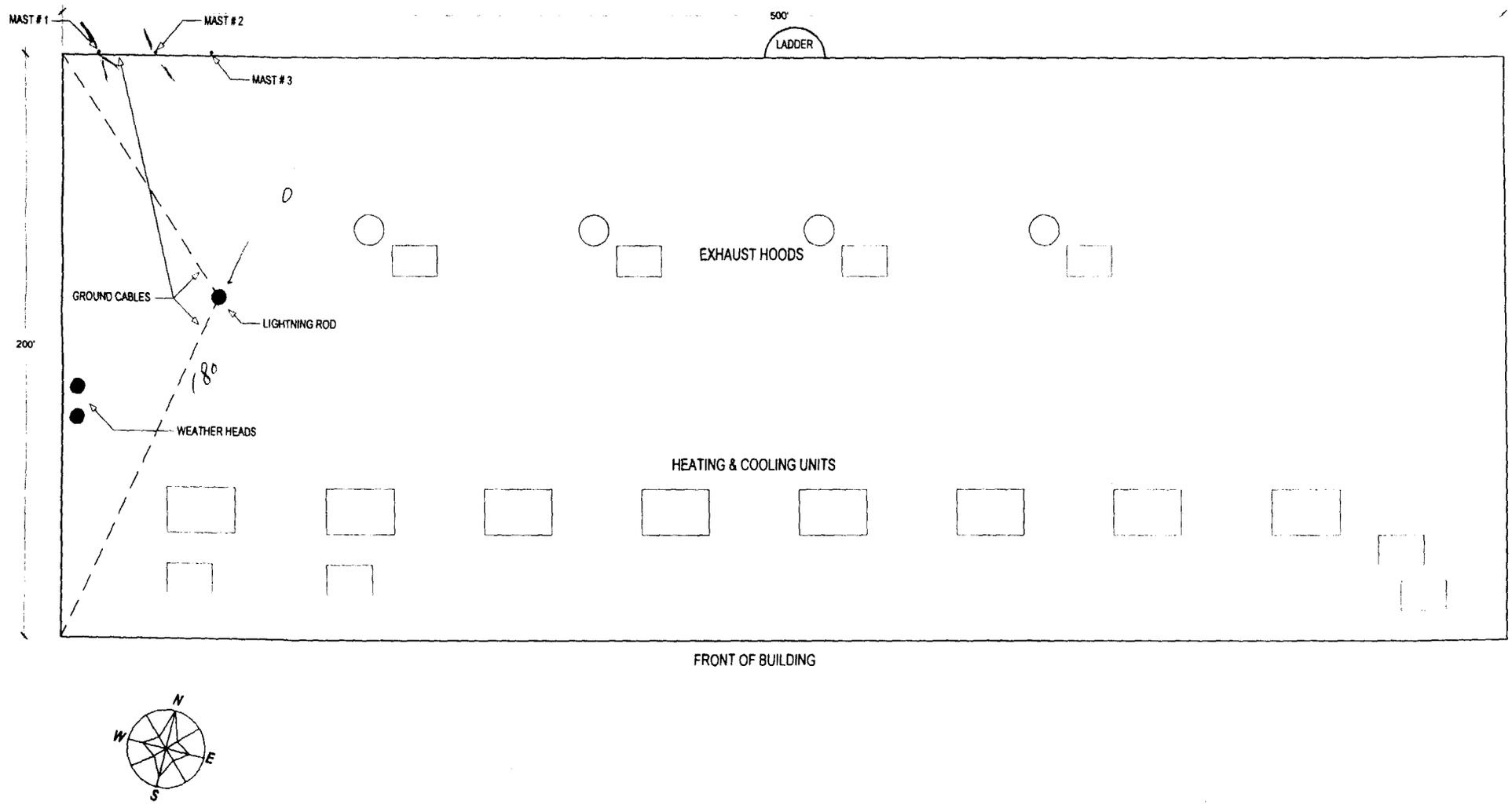

NationalTeleconsultants

ENGINEERING
FACILITY DESIGN
SYSTEM FABRICATION

700 NORTH BRAND BOULEVARD
GLENDALE, CALIFORNIA 91203
(818) 265-4400

CLIENT

DIRECTV

Spotbeam Ground Segment

DESIGNED	W.T.S.	DATE	01 FEB 01
DRAWN	H. CHAUNCEY	DATE	01 FEB 01
CHECKED	E. GORDON	DATE	
APPROVED		DATE	

REV	REVISED BY	DATE

THE DESIGNS REPRESENTED HEREBY ARE AND SHALL REMAIN THE PROPERTY OF NATIONAL TELECONSULTANTS, INC

TITLE

DIRECTV
LOCAL COLLECTION FACILITY
ROOFTOP LAYOUT and
MAST LOCATIONS
- GREENSBORO, N. CAROLINA -

SCALE NONE	SHEET 1 OF 1
PROJECT NUMBER 3602	DRAWING GO - ROOF

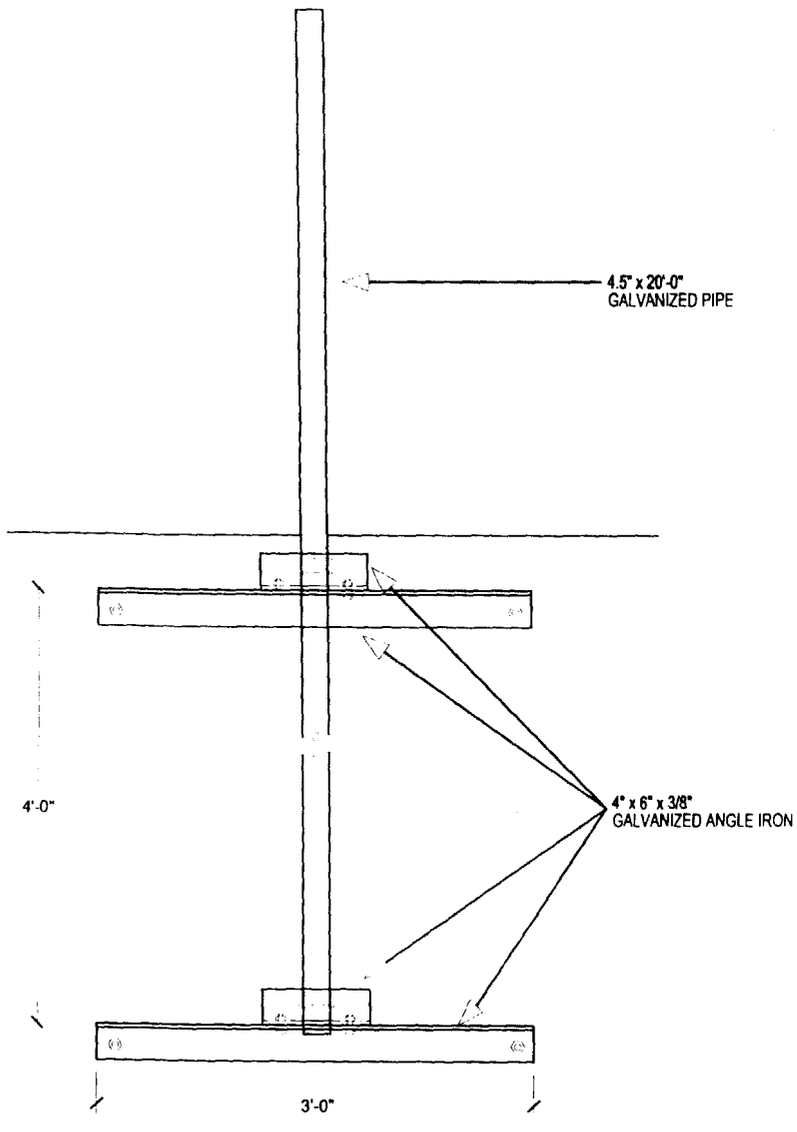

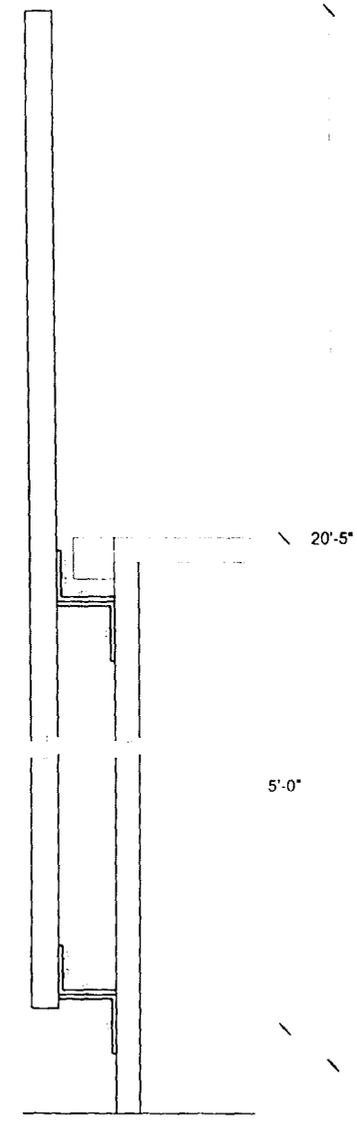

NOTE: MOUNTING METHOD IS SUGGESTED ARRANGEMENT ONLY. ACTUAL MOUNT DETAILS ARE THE RESPONSIBILITY OF THE LOCAL FACILITILTY PROVIDER.

NationalTeleConsultants

ENGINEERING
FACILITY DESIGN
SYSTEM FABRICATION

700 NORTH BRAND BOULEVARD
GLENDALE, CALIFORNIA 91203
(818) 265-4400

CLIENT

DIRECTV

Spotbeam
Ground Segment

DESIGNED W.T.S.	DATE 06 FEB 01	TITLE DIRECTV LOCAL COLLECTION FACILITY ANTENNA MAST MOUNT DETAIL GREENSBORO, N. CAROLINA	
DRAWN H. CHAUNCEY	DATE 06 FEB 01		
CHECKED	DATE		
APPROVED	DATE		
REV / REVISED BY	DATE	SCALE NONE	SHEET 1 OF 1
THE DESIGNS REPRESENTED HEREBY ARE AND SHALL REMAIN THE PROPERTY OF NATIONAL TELECONSULTANTS, INC		PROJECT NUMBER 3602	DRAWING GO - MOUNT