Element Type 12: 4 Wire Disconnect – (UNE Loop)

Definition: A 4 Wire circuit is a designed point-to-point circuit that requires special operational parameters (i.e., more demanding frequency response, envelope delay, noise, etc.) over and above that required by a normal 2 wire POTS type circuit.

Objective: Disconnect a 4 Wire Local Loop service for a CLEC customer.

Environment: Disconnect UNE-Loop (see Model description for UNE-Loop description)

Key Drivers of Cost:
Variable Input
- Labor Rate
- Variable Overhead
- Fallout
- Copper Loop Percentage
- Average Trip Time
- Number of Work Activities per Trip
- CO Staffed Ratio

Work Value Input
- Manual Work Step Times

High Level Process Overview:

Transmission Type: Analog x Digital x.
Unbundled Loop: Yes x No __.
Examples of service used on this element type:
HDSL
DDS
VF Data
PBX Tie Trunks

Time Estimates: Activity times are based on estimates provided by a panel of Subject Matter Experts.

Sample Output: See Attachment A

Detailed Work Activities: See Attachment B

Detailed Work Activity Descriptions:

Technical Description:
4 Wire Loop
One exception to non-designed loops is the 4 Wire loop, which by its very nature, constitutes a designed service/circuit. If the 4 Wire loop serves the end-user from the same CO or wire center, SMAS test points are modeled with the appropriate 4 Wire crossconnects.

Disconnect on Copper:
- Use of WFA
- Pull and analyze the order (NTEC)
- Pull and analyze the order (SSC)
- 4-Work Activities per trip
- Trip time to non-staffed CO
- Travel time within staffed CO (NTEC)
- Monitor circuit for traffic busy and correct assignment

- Disconnect cross-connects on SMAS test points
- Disconnect cross-connects on LDPF (Cosmic-Type) frame
- Close the order (NTEC)
- Close the order (SSC)

Fallout:
It is assumed that fallout of the order will occur 2% of the time to the CPC Center because it is a designed service. The activities include the following:
- Pull and analyze the order
- Clear the jeopardy

4 Wire TR-303 IDLC Loop (same CO)

Disconnect on IDLC:
- Use of WFA
- Pull and analyze the order (SSC)
- Close the order (SSC)

NOTE: The disconnect function is performed in a flow-through manner, remotely from an OSS.

Element Type 13: 2 Wire Cross Connect at the FDI – (Migration)

Definition: This element type is used in loop unbundling. Loop unbundling is where a new entrant uses a portion of the loop plant (i.e., either the feeder or the distribution). Loop unbundling is further described in Section 22.

Objective: Migrate a 2 Wire Local Loop service from the ILEC to a CLEC..

Environment: Migration 2 Wire Cross Connect (see Model Description for Migration description)

Key Drivers of Cost:
Variable Input

- Labor Rate
- Variable Overhead
- Fallout
- Copper Loop Percentage
- Average Trip Time
- Number of Work Activities per Trip
- Set Up/Tear Down Times

Work Value Input

- Manual Work Step Times

High Level Process Overview:

Transmission Type: Analog x Digital x.
Unbundled Loop: Yes x No __.
Examples of service used on this element type:
1 FB, 1 MB
1 FR, 1 MR
ISDN/BRI

Time Estimates: Activity times are based on estimates provided by a panel of Subject Matter Experts.

Sample Output: See Attachment A

Detailed Work Activities: See Attachment B

Detailed Work Activity Descriptions:

2 Wire FDI (Sub-loop)

Technical Assumption: The cross connection for Feeder Distribution Interface (FDI) assumes manual activity in the field. The study presumes that the technician can perform additional work activities such as maintenance, routines, and other provisioning activities per trip. The work activities could be at the same location or within the general area (e.g., F2 through F9 or the immediate Distribution Area). The study also assumes set-up. In this case, set-up is assumed to be setting up safety cones in the location. The study also assumes that the technician uses computerized field equipment called a Lucent Field Access System (FAS) or equivalent. In addition, the study assumes a Lucent 42 cabinet with binding posts. The 42 cabinet is a dual entrance cabinet. This allows the new entrant and ILEC separate access to the cabinet and Feeder and or Distribution Terminations. While there are other types of cross connects (punch-down termination, etc.), the binding post was assumed, even though the time for cross connect is greater, because of the quality and reliability needed for customer service.

Migration:

- Binding Post Terminations (2 wires)
- 42 Type SAI/FDI Cabinet (dual entrance)
- Use of WFA/FAS
- Additional tasks per trip, (per geographic area, i.e., F-2 to F-9)
- Pull and analyze the order
- Trip time
- Set-up time and tear-down time
- Continuity test
- Terminate cross-connect
- Close the order

Fallout:

It is assumed that fallout of the order will occur 2% of the time. Manual assistance will be required from a center called the Loop Assignment Center ("LAC"). The activities include the following:

1. pull and analyze the order
2. clear the jeopardy

Element Type 14: 2 Wire Disconnect at the FDI

Definition: This element type is used in loop unbundling. Loop unbundling is where a new entrant uses a portion of the loop plant (i.e., either the feeder or the distribution). See Section 22 for a detailed description of loop unbundling.

Objective: Disconnect a 2 Wire Local Loop at the FDI for a CLEC customer.

Environment: Disconnect 2 Wire Cross Connect (see Model Description for Disconnect description)

Key Drivers of Cost:
Variable Input
- Labor Rate
- Variable Overhead
- Fallout
- Average Trip Time
- Number of Work Activities per Trip
- Set Up/Tear Down Time

Work Value Input
- Manual Work Step Times

High Level Process Overview:

Transmission Type: Analog x Digital x.
Unbundled Loop: Yes x No __.
Examples of service used on this element type:
POTS or ISDN BRI
1 MR, 1MB
1 FR, 1 FB

The following details the manual activities of the Cost Model.
- Manual: Steps 107-115 would require manual intervention. This work would be performed by the personnel in the following work centers: SSI&M OSP and LAC.

Time Estimates: Activity times are based on estimates by a panel of Subject Matter Experts.

Sample Output: See Attachment A

Detailed Work Activities: See Attachment B

Detailed Work Activity Descriptions:

Technical Assumption:
The cross connection for Feeder Distribution Interface (FDI) assumes manual activity in the field. The study presumes that the technician performs additional work activities such as maintenance, routines, and other provisioning activities per trip. The work activities could be at the same location or within the general area (e.g., F2 through F9 or in the immediate Distribution Area. The study also assumes set-up and tear-down at the work location. In this case, set-up is assumed to be setting up safety cones in the location. The study also assumes that the technician uses computerized field equipment called a Lucent Field Access System (FAS) or equivalent. In addition, the study assumes a Lucent 42 cabinet with binding posts. The 42 Type cabinet is a dual entrance cabinet. This allows the new entrant and ILEC separate access to the cabinet and Feeder and or Distribution Terminations. While there are other types of cross connects (punch-down termination, etc.), the binding post was assumed, even though the time for cross connect is greater, because of the quality and reliability needed for customer service.

Disconnect:

- Binding Post Terminations (2 wires)
- 42 Type SAI/FDI Cabinet (dual entrance)
- Use of WFA/FAS
- Pull and analyze the order (IM/OSP)
- An average of 2-Orders per trip (per geographic area, i.e., F-2 to F-9)
- Trip time
- Set-up time and Tear-down time
- ANI (continuity) verification
- Disconnect cross-connect at the FDI
- Close the order

Fallout:

It is assumed that fallout of the order will occur 2% of the time. Manual assistance will be required from a center called the Loop Assignment Center ("LAC"). The activities include the following:

1. pull and analyze the order
2. clear the jeopardy

Element Type 15: 4 Wire Cross Connect at the FDI – (Migration)

Definition: This element type is used in loop unbundling. Loop unbundling is where a new entrant uses a portion of the loop plant (i.e., either the feeder or the distribution). Loop unbundling is further described in Section 22.

Objective: Move an existing 4 Wire cross connect service from an ILEC to a new entrant (CLEC).

Environment: UNE-Loop (see Model Description for Migrate/UNE-Loop description.)

Key Drivers of Cost:
Variable Input
- Labor Rate
- Variable Overhead
- Fallout
- Average Trip Time
- Number of Work Activities per Trip
- Set Up/Tear Down Time

Work Value Input
- Manual Work Step Times

High Level Process Overview:

Transmission Type: Analog x Digital x.
Unbundled Loop: Yes x No __.

Examples of services used on this element type:
Digital Data Service (DDS)
VF Data
PBX Tie Trunk
HDSL

Time Estimates: Activity times are based on estimates provided by a panel of Subject Matter Experts.

Sample Output: See Attachment A

Detailed Work Activities: See Attachment B

Detailed Work Activity Descriptions:

Technical Assumption:
The cross connection for Feeder Distribution Interface (FDI) assumes manual activity in the field. The study presumes that the technician performs more than one work activity per trip. The study also assumes set-up and tear-down. In this case, set-up is assumed to be setting up safety cones in the location. The study also assumes that the technician uses computerized field equipment called a Lucent Field Access System (FAS) or equivalent. In addition, the study assumes a Lucent 42 cabinet with binding posts. The 42 cabinet is a dual entrance cabinet. This allows the new entrant and ILEC separate access to the cabinet and Feeder and or Distribution Terminations. While there are other types of cross connects (punch-down termination, etc.), the binding post was assumed, even though the time for cross connect is greater, because of the quality and reliability needed for customer service.

Migration:

- Binding Post Terminations (4 wires)
- 42 Type SAI/FDI Cabinet (dual entrance)
- Use of WFA/FAS
- Pull and analyze the order (IM/OSP, NTEC & SSC)
- Negotiate customer release (CLEC to ILEC)
- More than 1 activity per trip (per geographic area, i.e., F-2 to F-9)
- Trip time to FDI
- Set-up time and tear down time at FDI
- Terminate cross-connect - binding post at FDI
- Close the order (NTEC, IM/OSP & SSC)

Fallout:

It is assumed that fallout of the order will occur 2% of the time. Manual assistance will be required from a center called the CPC Center. The activities include the following:

1. pull and analyze the order
2. resolve the fallout

Element Type 16: 4 Wire Disconnect at the FDI

Definition: This element type is used in loop unbundling. Loop unbundling is where a new entrant uses a portion of the loop plant (i.e., either the feeder or the distribution). See Section 22 for a detailed description of loop unbundling.

Objective: Disconnect a 4 Wire cross connect service for a CLEC customer.

Environment: Disconnect 4 Wire Cross Connect (see Model Description for Disconnect description)

Key Drivers of Cost:
Variable Input
- Labor Rate
- Variable Overhead
- Fallout
- Average Trip Time
- Number of Work Activities per Trip
- Set Up/Tear Down Time

Work Value Input
- Manual Work Step Times

High Level Process Overview:

Transmission Type: Analog x Digital x.
Unbundled Loop: Yes x No__
Examples of service used on this element type:
DDS
HDSL
VF Data
PBX Tie Trunk

Time Estimates: Activity times are based on estimates by a panel of Subject Matter Experts.

Sample Output: See Attachment A

Detailed Work Activities: See Attachment B

Detailed Work Activity Descriptions:

Technical Assumption:
The cross connection for Feeder Distribution Interface (FDI) assumes manual activity in the field. The study presumes that the technician performs more than one work activity per trip on average. The study also assumes set-up and tear-down time. In this case, set-up is assumed to be setting up safety cones in the location. The study also assumes that the technician uses computerized field equipment called a Lucent Field Access System (FAS) or equivalent. In addition, the study assumes a Lucent 42 Type cabinet with binding posts. The 42 Type cabinet is a dual entrance cabinet. This allows the new entrant and ILEC separate access to the cabinet and Feeder and or Distribution Terminations. While there are other types of cross connects (punch-down termination, etc.), the binding post was assumed, even though the time for cross connect is greater, because of the quality and reliability needed for customer service.

Disconnect:

- Binding Post Terminations (4 wires)
- 42 SAI/FDI Cabinet (dual entrance)
- Use of WFA/FAS
- Pull and analyze the order - SSC and IM/OSP
- An average of 2 orders per trip (per geographic area, i.e., F-2 to F-9)
- Trip time
- Set-up time and breakdown time
- Disconnect cross-connect at the FDI - Binding post
- Close the order - SSC and IM/OSP

Fallout:

It is assumed that fallout of the order will occur 2% of the time. Manual assistance will be required from a center called the Loop Assignment Center ("LAC"). The activities include the following:

- pull and analyze the order
- clear the jeopardy

Element Type 17: 2 Wire Cross Connect at 6 line NID - (Migration)

Definition: 6 Line NID (Network Interface Device) can accommodate six 2 Wire circuits. See the technical description for specific details.

Objective: Migrate a 2 Wire Cross Connect at a 6 Line NID for a CLEC customer.

Environment: Cross Connect at a NID (see Model Description for Installation description)

Key Drivers of Cost:
Variable Input
- Labor Rate
- Variable Overhead
- Fallout
- Average Trip Time
- Number of Work Activities per Trip
- Set Up/Tear Down Time

Work Value Input
- Manual Work Step Times

High Level Process Overview:

Transmission Type: Analog x Digital__.
Unbundled Loop: Yes x No __.
Examples of services used on this element type:
Residence Line 1FR, 1MR
Business Line 1FB, 1MB
ISDN/BRI

Sample Output: See Attachment A

Detailed Work Activities: See Attachment B

Detailed Work Activity Descriptions:

Technical Description:
The fundamental function of the NID is to separate the customer's facilities from the carrier's facilities. In a typical residential setting, the NID is a small box just outside or inside the house where the telephone company connects to the customer's inside wiring. In a business setting or for a large residential building such as an apartment building, the concept is the same, but the box is bigger and has multiple connections. The NID provides a protective ground connection, provides protection against lightning and other high voltage surges, and is capable of terminating cables such as twisted pair cable. The NID network element is illustrated in the exhibit below.

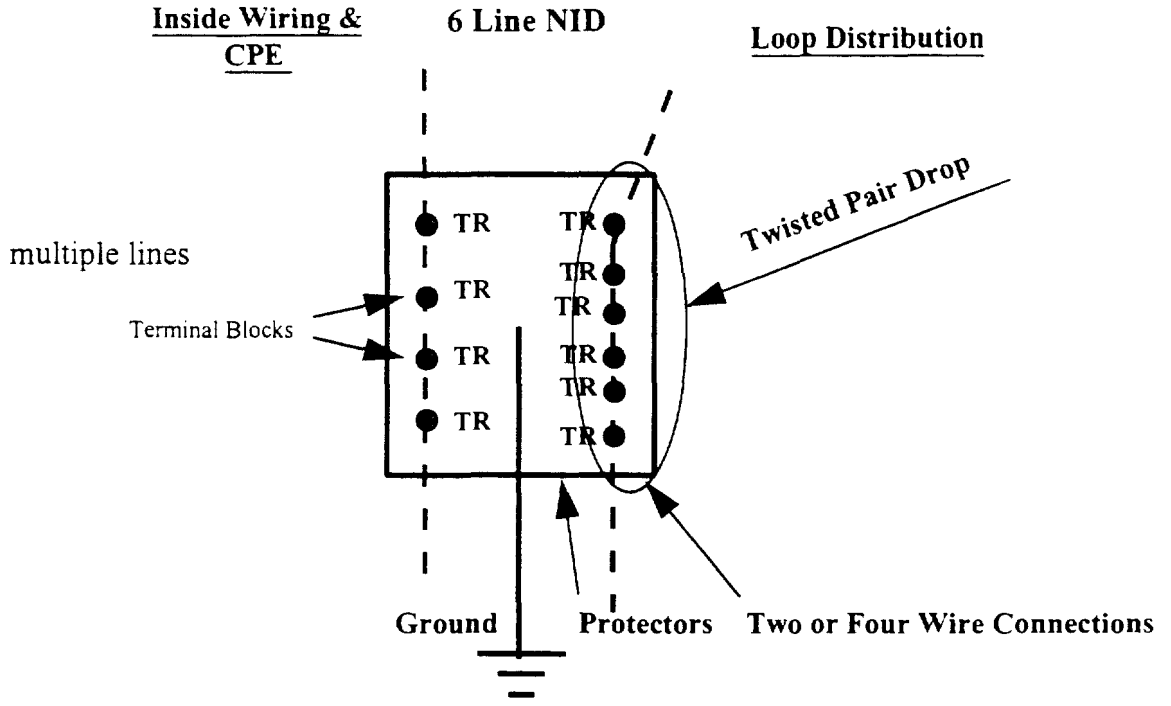

- Technical Assumptions: The installation of the 2 Wire NID assumes a forward looking 6-Line NID, with manual activity at the customer's premise. The study assumes that the technician performs one work activity per trip. The study also assumes that the technician uses a computerized field equipment called a Lucent Field Access System (FAS) or similar system.
- Estimated time for the rearrangement of the end user customer wiring at the NID is associated with a new entrant request of ILEC to do this work. However the new entrant should have the option of either completing the work itself, or sub-contracting with a third party or ILEC.

Installation:
- Use of WFA and FAS
- 1-Work Activity per trip
- Pull and analyze the order (I&M)
- Trip time to customer premise
- Set-up time and tear down time
- Customer contact to gain access
- Rearrange 2 wire termination on NID
- ANI continuity verification
- Close the order

Element Type 18: Channelized DS1 Virtual Feeder to RT - Remote Terminal (Install)

Definition: Channelized Loop is a virtual circuit within a wider bandwidth facility. (DS1 or VT-1 within a higher bandwidth optical SONET facility such as OC-3).

Objective: Install a Channelized DS1 Virtual Feeder Loop for a CLEC customer in order to begin the migration of and augmentation of DS0 channels (e.g., 1-24).

Environment: UNE-Loop - Install (see Model Description for Install UNE-Loop description)

Key Drivers of Cost:
Variable Input
- Labor Rate
- Variable Overhead
- Fallout
- CO Staffed Ratio
- Average Trip Time
- Number of Work Activities per Trip

Work Value Input
- Manual Work Step Times

High Level Process Overview:

Transmission Type: Analog__ Digital x.
Unbundled Loop: Yes x No__
Examples of service used on this element type:
POTS, ISDN BRI (Virtual DS0's in a DS1)
Special Services (e.g., 4-wire)
DS1 Service

Time Estimates: Activity times are based on estimates by a panel of Subject Matter Experts.

Sample Output: See Attachment A

Detailed Work Activities: See Attachment B

Detailed Work Activity Descriptions:

Installation:
- Use of WFA and FAS
- Pull and analyze the order (FMAC)
- 4 Work Activities per trip
- Travel time to non-staffed CO
- Travel time within the CO
- Install 5 wire DSX cross-connect jumper
- Conduct continuity test (quasi random signal source - QRSS - QRSS) verification
- Retrieve and analyze performance monitoring data
- Perform intrusive test as required
- Close the order

Fallout:
It is assumed that fallout of the order will occur 2% of the time. Manual assistance will be required from a center called the CPC Center. The activities include the following:

- pull and analyze the order
- resolve the fallout condition

2 Wire Unbundled TR-303 (IDLC) Loop (> 9kft.)

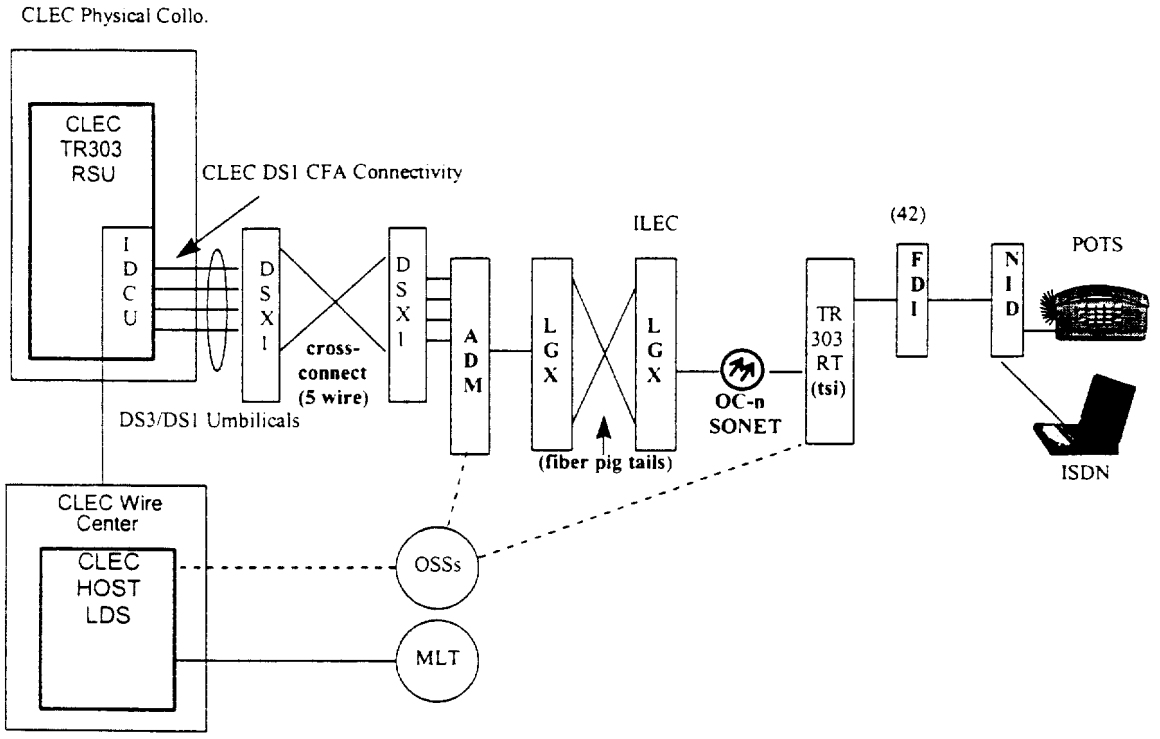

Channelized DS1 Virtual Feeder to Remote Terminal (RT)

Element Type 19: Channelized DS1 Virtual Feeder to RT - Remote Terminal (Disconnect)

Definition: Channelized Loop is a virtual circuit within a wider bandwidth facility. (e.g., DS1 or VT-1 within a higher bandwidth facility such as OC-3)

Objective: Disconnect a Channelized DS1 Virtual Feeder Loop service for a CLEC customer.

Environment: UNE-Loop - Disconnect (see Model Description for Install UNE-Loop description)

Key Drivers of Cost:
Variable Input
- Labor Rate
- Variable Overhead
- Fallout
- CO Staffed Ratio
- Average Trip Time
- Number of Work Activities per Trip

Work Value Input
- Manual Work Step Times

High Level Process Overview:

Transmission Type: Analog x Digital x.

Unbundled Loop: Yes x No __.

Examples of service used on this element type:
POTS, ISDN BRI (Virtual DS0's in a DS1)
Special Services (e.g., 4-wire)
DS1 Service

Time Estimates: Activity times are based on estimates by a panel of Subject Matter Experts.

Time Estimates: Activity times are based on estimates by a panel of Subject Matter Experts.

Sample Output: See Attachment A

Detailed Work Activities: See Attachment B

Detailed Work Activity Descriptions:

Disconnect:
- Use of WFA and FAS
- Pull and analyze the order (FMAC)
- 4 Work Activities per trip
- Travel time to non-staffed CO
- Travel time within the CO
- Remove 5 wire DSX cross-connect jumper
- Close the order

Fallout:

It is assumed that fallout of the order will occur 2% of the time. Manual assistance will be required from a center called the CPC Center. The activities include the following:

- pull and analyze the order
- resolve the fallout condition

Note: Electronic crossconnect deletion (disconnect) in SONET ADM in CO is accomplished in a flow-through manner via upstream OSS Systems (e.g., TIRKS, NSDB, OPS/INE).

Element Type 20: DS1 Interoffice Transport – (Install)

Definition: DS1 is a 1.544 Mb/s digital transmission medium which has the capacity of 24 virtual DS0 circuits (e.g., voice or data circuits).

Objective: Install a DS1 Interoffice Transport service for a CLEC customer.

Environment: DS1 Interoffice Transport (see Model Description for Install DS1 description)

Key Drivers of Cost:
Variable Input
- Labor Rate
- Variable Overhead
- Fallout
- CO Staffed Ratio
- Average Trip Time
- Number of Work Activities per Trip

Work Value Input
- Manual Work Step Times

High Level Process Overview:

Transmission Type: Analog__ Digital x.
Unbundled Loop: Yes__ No__
Examples of service used on this element type:
DS1 between an ILEC and a CLEC

Time Estimates: Activity times are based on estimates by a panel of Subject Matter Experts.

Sample Output: See Attachment A

Detailed Work Activities: See Attachment B

Detailed Work Activity Descriptions:

Technical Description:
The following assumptions were made for DS1 Transport:
- This non-recurring cost was developed to provide the new entrant the ability to install and purchase the capacity for DS1 Transport. The assumptions include that all DS1, DS3 Connecting Facility Assignment (CFA) terminations (also known as Expanded Interconnection Channel Terminations (CFA)) are less than 655 and 450 feet, respectively. There are no ORBs, M1/3 Mux, DSXs; cross connects, adjunct test equipment, and adjunct performance monitoring units since they are inherent in DCS/EDSX .
- The study assumes that the SONET rings are in place.
- With respect to the placement of the Plug-in or channel-units, the costs are recovered elsewhere.
- IOF Technology assumes SONET and depending on speed, UPSR and BLSR self-healing rings (see figure below).

SONET RINGS

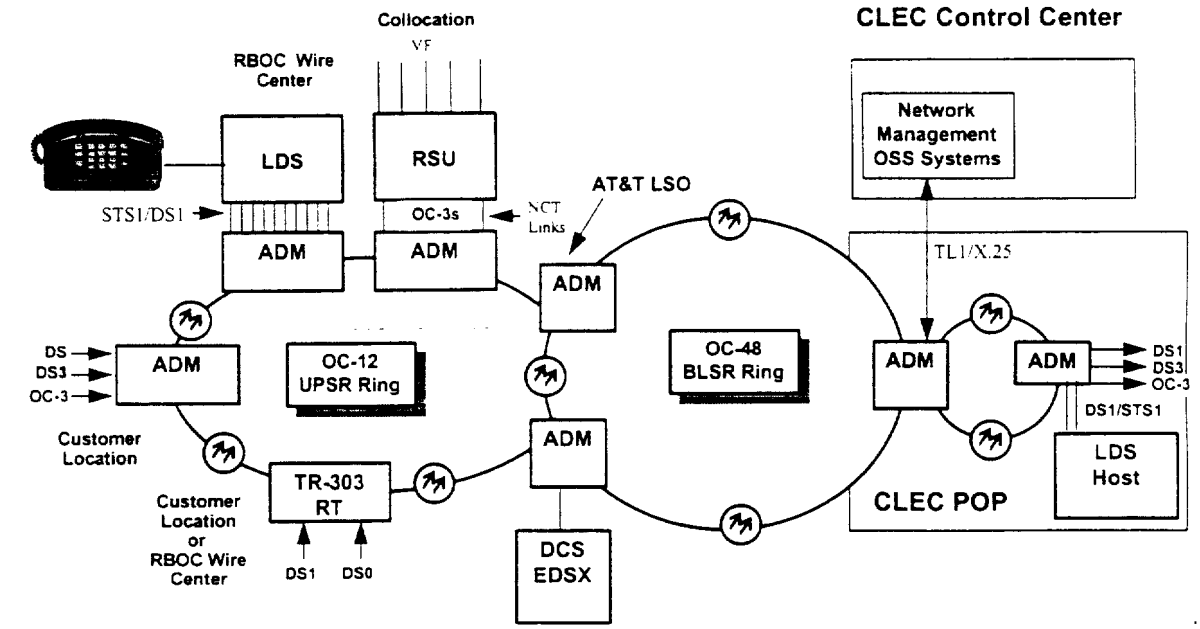

- The DCS technology assumption includes 3/3 DCS/EDSX and/or 3/1 DCS dropping from SONET ring via the ADM. SONET Plug-in equipment assumes that the DS3 or STS-1 virtual connections (28) between the SONET Mux and DCS (W-DCS/EDSX or W-DCS) is shared. Additional SONET Plug-in equipment is also assumed if SONET ring used is OC-48, since additional low speed shelves may be required. This is the connection between high-speed and low-speed multiplexers which are needed to reach the DS1 level.
- Crossconnects are electronic, via upstream remote OSS systems (CPU time)
- It was assumed that DS1 was virtual (i.e. VT1.5) over SONET Ring. It also assumed that cross connects are performed electronically, in a flow-through manner via upstream OSS systems. This cross connect will take 50 ms. CPU time with an acknowledgment response within 2 seconds.
- The study also assumes that the performance monitoring for Error Seconds (ES), Bit Error Rate (BER), Cyclical Redundancy Check (CRC), Unavailable Seconds (UAS), Severely Error Seconds (SES), and Automatic Protection Counts (APC) have been set (per Bellcore GR-253-CORE, a module of the TSGR)[47] Quad cards have also been assumed. The costs for time to install Quad cards is recovered elsewhere.
- Another assumption of a DS1 or DS3 terminating on a DCS is that no DSX or associated manual cross connect is required because the DCS - if installed properly - should be cabled or hardwired to the office repeater bay ("ORB")[48] or Fiber Multiplexer (SONET Mux) without a DSX. All new-connects, disconnects, edits, and rearrangements (rolls) are transaction based and flow through automatically via upstream OSS over a standard TL1/X.25 interface in approximately 2.0 seconds (see Bellcore GR-199-CORE. Section 2, Pg. 2-5).[49]

---

47 Bellcore GR-253-CORE; SONET Requirements and Objectives (A module of the TSGR)

48 ORBs are required when LBO exceed the pulse template for DS1 (655') or DS3 (450'). Source - Bellcore TSGR.

49 Bellcore OTGR, FR-439, (TR-TSY-000199/GR-199-CORE; TL1 Specifications on Memory Administration).

- Using the most forward-looking technology for IOF Transport such as EDSX/DCS (see exhibit below), there would be no need to run manual DS1 or DS3 cross-connects to the DSX every time a customer changed providers since the software based/stored program control technology would allow for flow-through provisioning and maintenance from upstream operations support systems ("OSS") right down to the network elements in a matter of seconds with little or no human intervention required.
- FMAC is considered to be plant control office (PCO) and maintenance control office (MCO) control office, therefore no SSC involvement is required.

DS1 TRANSPORT

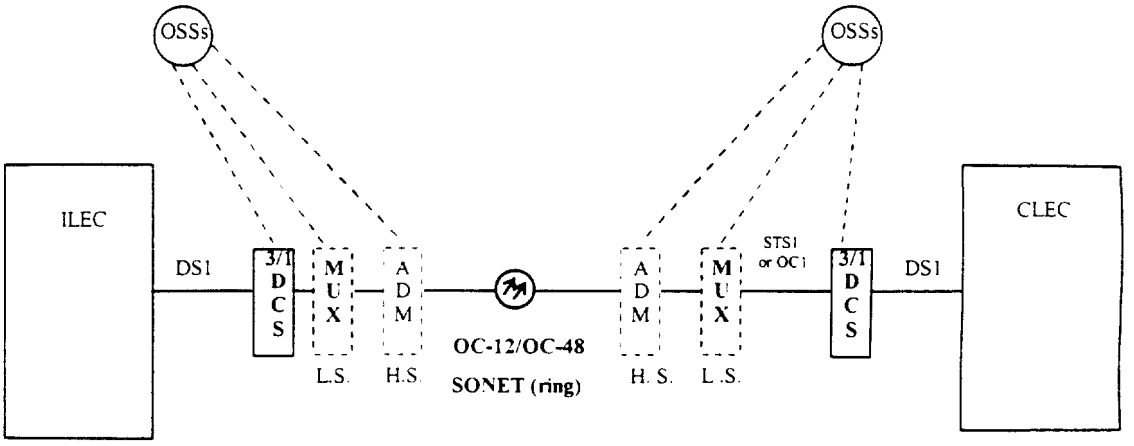

L S. = Low Speed SONET Mux.

H. S. = High Speed SONET Mux.

Installation:

- Use of WFA
- Pull and analyze the order (FMAC)
- 4-Work Activities per trip
- Trip time to non-staffed CO : R
- Install plug-in equipment on high speed SONET Mux (cost recovered elsewhere)
- Install plug-in equipment low speed SONET Mux (cost recovered elsewhere)
- OSS (OPS/INE) CPU electronic cross-connect/mapping time for 1 DCS and 2 SONET ADM/LTE (cost recovered elsewhere)
- Continuity test (QRSS) from ITS / DTAU
- Retrieve and analyze PM data (NMA) test (BER, ES, etc), 100% of the time
- Perform Intrusive test due to unacceptable PM data (TOS) , 5% of the time
- Close the order (FMAC)

Fallout:

It is assumed that fallout of the order will occur 2% of the time to the CPC Center because it is a DS1 designed service. The activities include the following:

- Pull and analyze the order
- Clear the jeopardy

Element Type 21: DS1 Interoffice Transport – (Disconnect)

Definition: DS1 is a 1.544 Mb/s digital transmission medium which has the capacity of 24 virtual DS0 circuits (e.g., voice or data circuits).

Objective: Disconnect a DS1 Interoffice Transport service for a CLEC customer.

Environment: DS1 Interoffice Transport (see Model Description for Install DS1 description)

Key Drivers of Cost:
Variable Input
- Labor Rate
- Variable Overhead
- Fallout
- CO Staffed Ratio
- Average Trip Time
- Number of Work Activities per Trip

Work Value Input
- Manual Work Step Times

High Level Process Overview:

Transmission Type: Analog__ Digital x.
Unbundled Loop: Yes__ No__
Examples of service used on this element type:
DS1 between an ILEC and a CLEC
Voice, Data, Special Services, etc.

Time Estimates: Activity times are based on estimates by a panel of Subject Matter Experts.

Sample Output: See Attachment A

Detailed Work Activities: See Attachment B

Detailed Work Activity Descriptions:

Technical Description:
The following assumptions were made for DS1 Transport:
- This non-recurring cost was developed to provide the new entrant the ability to install and purchase the capacity for DS1 Transport. The assumptions include that all DS1, DS3 Connecting Facility Assignment (CFA) terminations (also known as Expanded Interconnection Channel Terminations (CFA) are less than 655 and 450 feet, respectively. There are no ORBs, M1/3 Mux, DSXs; cross connects, adjunct test equipment, and adjunct performance monitoring units since they are inherent in DCS/EDSX .
- The study assumes that the SONET rings are in place.
- With respect to the placement of the Plug-in or channel-units, the costs are recovered elsewhere.
- IOF Technology assumes SONET and depending on speed, UPSR and BLSR self-healing rings (see figure below).
- The DCS technology assumption includes 3/3 DCS/EDSX and/or 3/1 DCS dropping from SONET ring via the ADM. SONET Plug-in equipment assumes that the DS3 or STS-1 virtual connections (28) between the SONET Mux and DCS (W-DCS/EDSX or W-DCS) is shared. Additional SONET Plug-in equipment is also assumed if SONET ring used is OC-48, since additional low speed shelves may be required. This is the connection between high-speed and low-speed multiplexers which are needed to reach the DS1 level.

- Crossconnects are electronic, via upstream remote OSS systems (CPU time)
- It was assumed that DS1 was virtual (i.e. VT1.5) over SONET Ring. It also assumed that cross connects are performed electronically, in a flow-through manner via upstream OSS systems. This cross connect will take 50 ms. CPU time with an acknowledgment response within 2 seconds.
- The study also assumes that the performance monitoring for Error Seconds (ES), Bit Error Rate (BER), Cyclical Redundancy Check (CRC), Unavailable Seconds (UAS), Severely Error Seconds (SES), and Automatic Protection Counts (APC) have been set (per Bellcore GR-253-CORE, a module of the TSGR)[50] Quad cards have also been assumed. The costs for time to install Quad cards is recovered elsewhere.
- Another assumption of a DS1 or DS3 terminating on a DCS is that no DSX or associated manual cross connect is required because the DCS - if installed properly - should be cabled or hardwired to the office repeater bay ("ORB")[51] or Fiber Multiplexer (SONET Mux) without a DSX. All new-connects, disconnects, edits, and rearrangements (rolls) are transaction based and flow through automatically via upstream OSS over a standard TL1/X.25 interface in approximately 2.0 seconds (see Bellcore GR-199-CORE. Section 2, Pg. 2-5).[52]
- Using the most forward-looking technology for IOF Transport such as EDSX/DCS (see exhibit below), there would be no need to run manual DS1 or DS3 cross-connects to the DSX every time a customer changed providers since the software based/stored program control technology would allow for flow-through provisioning and maintenance from upstream operations support systems ("OSS") right down to the network elements in a matter of seconds with little or no human intervention required.
- FMAC is considered to be plant control office (PCO) and maintenance control office (MCO) control office, therefore no SSC involvement is required.

Disconnect:

- Flow-through assumed on disconnect from TIRKS to NSDB, and NSDB to OPS/INE.
- OSS (OPS/INE) CPU electronic disconnect of cross-connect time for 1 DCS and 2 SONET ADM/LTE (cost recovered elsewhere)
- Verification of disconnects via COMPL/CTAG autonomous messages from DCS and SONET ADM to OSS.

Fallout:

It is assumed that fallout of the order will occur 2% of the time to the CPC Center because it is a DS1 designed service. The activities include the following:

- Pull and analyze the order
- Clear the jeopardy

---

50 Bellcore GR-253-CORE; SONET Requirements and Objectives (A module of the TSGR)

51 ORBs are required when LBO exceed the pulse template for DS1 (655') or DS3 (450'). Source - Bellcore TSGR.

52 Bellcore OTGR, FR-439, (TR-TSY-000199/GR-199-CORE: TL1 Specifications on Memory Administration).

Element Type 22: DS3 Interoffice Transport – (Install)

Definition: DS3 is a 44.736Mb/s digital transmission medium which has the virtual capacity of 28 DS1's or 672 DS0 voice or data circuits.

Objective: Install a DS3 Interoffice Transport service for a CLEC customer.

Environment: DS3 Interoffice Transport (see Model Description for install DS3 description)

Key Drivers of Cost:
Variable Input
- Labor Rate
- Variable Overhead
- Fallout
- CO Staffed Ratio
- Average Trip Time
- Number of Work Activities per Trip

Work Value Input
- Manual Work Step Times

High Level Process Overview:

Transmission Type: Analog__ Digital x.
Unbundled Loop: Yes__ No __.
Examples of service used on this element type:
DS3 between an ILEC and a CLEC
Virtual DS1s

Time Estimates: Activity times are based on estimates provided by a panel of Subject Matter Experts.

Sample Output: See Attachment A

Detailed Work Activities: See Attachment B

Detailed Work Activity Descriptions:

Technical Description:
The following assumptions were made for DS3 Transport:
- This non-recurring cost was developed to provide the new entrant the ability to install and purchase the capacity for DS3 Transport. The assumptions include that all DS1, DS3 Connecting Facility Assignment (CFA) terminations (also known as Expanded Interconnection Channel Terminations (CFA)) are less than 655 and 450 feet, respectively. There are no ORBs, M1/3 Mux, DSXs; cross connects, adjunct test equipment, and adjunct performance monitoring units since they are inherent in DCS/EDSX.
- The study assumes that the SONET rings are in place (see DS1 transport for SONET diagram).
- For placement of the Plug-in or channel-unit the costs are recovered under recurring charges. Also included in this task is the technician placing his/her wrist strap on to guard against any ESD problems.
- Technology assumes SONET and depending on speed, UPSR and BLSR self-healing rings.
- The DCS technology assumption includes 3/3 DCS/EDSX and/or 3/1 DCS dropping from SONET ring. SONET Plug-in equipment assumes that the DS3 or STS-1 are virtual.
- Crossconnects are electronic via upstream, remote OSS systems.
- Rationale: The assumption of a DS3 terminating on a DCS is that no DSX or associated manual cross connect is required because the DCS - if installed properly - should be cabled or hardwired to

the office repeater bay ("ORB")[53] or Fiber Multiplexer (SONET Mux) without a DSX. All new-connects, disconnects, edits, and rearrangements (rolls) are transaction based and flow through automatically via upstream OSS over a standard TL1/X.25 interface in approximately 2.0 seconds (see Bellcore GR-199-CORE. Section 2, Pg. 2-5).[54]

- Using the most forward-looking technology such as EDSX/DCS, there would be no need to run manual DS3 cross-connects to the DSX every time a customer changed providers since the software based/stored program control technology would allow for flow-through provisioning and maintenance from upstream operations support systems ("OSS") right down to the network elements in a matter of seconds with little or no human intervention required.
  The study also assumes that the performance monitoring for Error Seconds (ES), Bit Error Rate (BER), Cyclical Redundancy Check (CRC), Unavailable Seconds (UAS), Severely Error Seconds (SES), and Automatic Protection Counts (APC) have been set (per Bellcore GR-253-CORE, a module of the TSGR)[55].
  It is further assumed that DS3 was virtual over SONET Ring. It also assumed that cross connects are performed electronically, in a flow-through manner via upstream OSS systems.
  This cross connect will take 50 ms. CPU time with an acknowledgment response within 2 seconds. (see Bellcore GR-199-CORE. Section 2, Pg. 2-5).[56]
- This non-recurring charge was developed to provide the new entrant the ability to install and purchase the capacity for DS3 Transport (see figure below).

DS3 TRANSPORT

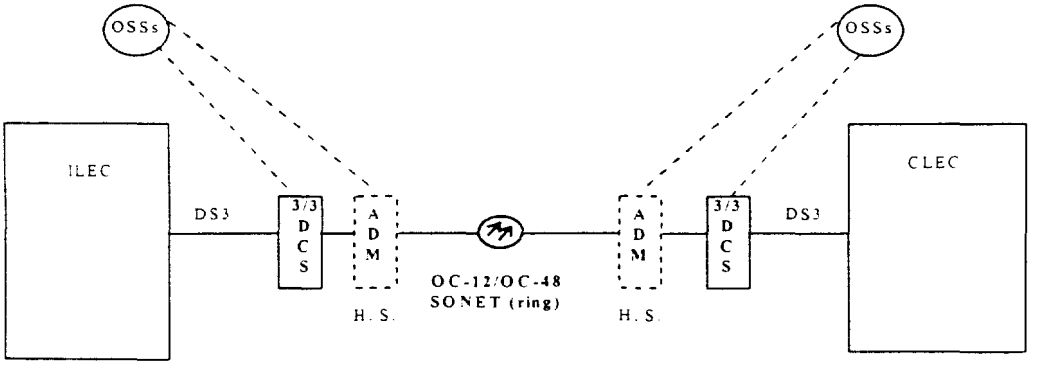

H. S. = High Speed SONET Mux.

Installation:

---

53 ORBs are required when LBO exceed the pulse template for DS1 (655') or DS3 (450').

54 Bellcore OTGR, FR-439, (TR-TSY-000199/GR-199-CORE; TL1 Specifications on Memory Administration).

55 Bellcore GR-253-CORE: SONET Requirements and Objectives (a module of the TSGR).

56 Bellcore OTGR, FR-439, (TR-TSY-000199/GR-199-CORE; TL1 Specifications on Memory Administration).

- Use of WFA
- Pull and analyze the order (FMAC)
- Trip time to non-staffed CO : R
- Install plug-in equipment on high speed SONET Mux (Cost recovered elsewhere)
- Install plug-in equipment on DCS (Cost recovered elsewhere)
- OSS (OPS/INE) CPU electronic cross-connect/mapping time for 1 DCS and 1 SONET ADM/LTE.
- Perform remote B3ZS test
- Retrieve and analyze PM data (NMA) test (BER, ES, etc) for 100% of the time
- Perform Intrusive test as required : R
- Continuity verification cross-office test done via COMPL/CTAG response included in 2 second (4 second total for DCS and SONET ADM/LTE) acknowledgment response
- Close the order (FMAC)

Fallout:
It is assumed that fallout of the order will occur 2%of the time to the CPC Center because it is a DS3 designed service. The activities include the following:

- Pull and analyze the order
- Clear the jeopardy

Other EDSX/DCS Assumptions for DS1 and DS3 Transport:
According to Bellcore SR-TSV-002275, BOC Notes on the LEC Network, Issue 2 (April 1994), Section 9.2.2.2, pages 9-7 and 9-8[57]: "EDSXs are software controlled alternatives to the manual DSX. . . DCSs are software -controlled devices considered to be intelligent network elements because they can provide the following features:

- Remote Provisioning and rearrangement of the digital interconnections;
- Continuous service monitoring;
- Automatic equipment and facilities protection (self-healing capabilities); and
- Remote test access."

Example: In the case of a DS1 terminating on a DCS or EDSX, no physical DSX or crossconnect is required. At the time of construction (EF&I) the DCS or EDSX should be cabled via CFA directly to the CLEC collocation space or SONET ADM. Done this way, the CFA is effectively accomplished at the time the infrastructure is built. Once the infrastructure is in place, the cross connect takes place electronically in a mater of 2 seconds[58] in a mechanized flow-through manner via upstream OSS systems. Again, all new connects, disconnects, and rearrangements can then be accomplished in a flow-through manner from Operations Support Systems over a standard TL1/X.25 interface within 2 seconds (See Bellcore Technical Reference GR-199-CORE).

[57] Bellcore SR-TSV-002275, BOC Notes on the LEC Network, Issue 2 (April 1994), Section 9.2.2.2, pages 9-7 and 9-8.

[58] Reference Bellcore GR-199-CORE

Element Type 23: DS3 Interoffice Transport – (Disconnect)

Definition: DS3 is a 44.736Mb/s digital transmission medium which has the virtual capacity of 28 DS1's or 672 DS0 voice or data circuits.

Objective: Disconnect a DS3 Interoffice Transport service for a CLEC customer.

Environment: DS3 Interoffice Transport (see Model Description for install DS3 description)

Key Drivers of Cost:
Variable Input
- Labor Rate
- Variable Overhead
- Fallout
- CO Staffed Ratio
- Average Trip Time
- Number of Work Activities per Trip

Work Value Input
- Manual Work Step Times

High Level Process Overview:

Transmission Type: Analog__ Digital x.
Unbundled Loop: Yes__ No __.
Examples of service used on this element type:
DS3 between an ILEC and a CLEC

Time Estimates: Activity times are based on estimates provided by a panel of Subject Matter Experts.

Sample Output: See Attachment A

Detailed Work Activities: See Attachment B

Detailed Work Activity Descriptions:

Technical Description:
The following assumptions were made for DS3 Transport:
- This non-recurring cost was developed to provide the new entrant the ability to install, disconnect, and purchase the capacity for DS3 Transport. The assumptions include that all DS1, DS3 Connecting Facility Assignment (CFA) terminations (also known as Expanded Interconnection Channel Terminations (CFA)) are less than 655 and 450 feet, respectively. There are no ORBs, M1/3 Mux, DSXs; cross connects, adjunct test equipment, and adjunct performance monitoring units since they are inherent in DCS/EDSX.
- The study assumes that the SONET rings are in place (see DS1 transport for SONET diagram).
- For placement of the Plug-in or channel-unit the costs are recovered under recurring charges. Also included in this task is the technician placing his/her wrist strap on to guard against any ESD problems.
- Technology assumes SONET and depending on speed, UPSR and BLSR self-healing rings.
- The DCS technology assumption includes 3/3 DCS/EDSX and/or 3/1 DCS dropping from SONET ring. SONET Plug-in equipment assumes that the DS3 or STS-1 are virtual.
- Crossconnects are electronic via upstream, remote OSS systems.
- Rationale: The assumption of a DS3 terminating on a DCS is that no DSX or associated manual cross connect is required because the DCS - if installed properly - should be cabled or hardwired to

the office repeater bay ("ORB")[59] or Fiber Multiplexer (SONET Mux) without a DSX. All new-connects, disconnects, edits, and rearrangements (rolls) are transaction based and flow through automatically via upstream OSS over a standard TL1/X.25 interface in approximately 2.0 seconds (see Bellcore GR-199-CORE. Section 2, Pg. 2-5).[60]

- Using the most forward-looking technology such as EDSX/DCS, there would be no need to run manual DS3 cross-connects to the DSX every time a customer changed providers since the software based/stored program control technology would allow for flow-through provisioning and maintenance from upstream operations support systems ("OSS") right down to the network elements in a matter of seconds with little or no human intervention required.
  The study also assumes that the performance monitoring for Error Seconds (ES), Bit Error Rate (BER), Cyclical Redundancy Check (CRC), Unavailable Seconds (UAS), Severely Error Seconds (SES), and Automatic Protection Counts (APC) have been set (per Bellcore GR-253-CORE, a module of the TSGR)[61].
  It is further assumed that DS3 was virtual over SONET Ring. It also assumed that cross connects are performed electronically, in a flow-through manner via upstream OSS systems.
  This cross connect will take 50 ms. CPU time with an acknowledgment response within 2 seconds. (see Bellcore GR-199-CORE. Section 2, Pg. 2-5).[62]
- This non-recurring charge was developed to provide the new entrant the ability to install and purchase the capacity for DS3 Transport (see figure below).

Disconnect:

- Flow-through assumed on disconnect from TIRKS to NSDB, and NSDB to OPS/INE.
- OSS (OPS/INE) CPU electronic disconnect of cross-connect time for 1 DCS and 2 SONET ADM/LTE (cost recovered elsewhere)
- Verification of disconnects via COMPL/CTAG autonomous messages from DCS and SONET ADM to OSS.

Fallout:

It is assumed that fallout of the order will occur 2% of the time to the CPC Center because it is a DS1 designed service. The activities include the following:

- Pull and analyze the order
- Clear the jeopardy

Other EDSX/DCS Assumptions for DS1 and DS3 Transport:

According to Bellcore SR-TSV-002275, BOC Notes on the LEC Network, Issue 2 (April 1994), Section 9.2.2.2, pages 9-7 and 9-8[63]: "EDSXs are software controlled alternatives to the manual DSX. . . DCSs

---

59 ORBs are required when LBO exceed the pulse template for DS1 (655') or DS3 (450').

60 Bellcore OTGR, FR-439, (TR-TSY-000199/GR-199-CORE: TL1 Specifications on Memory Administration).

61 Bellcore GR-253-CORE; SONET Requirements and Objectives (a module of the TSGR).

62 Bellcore OTGR, FR-439, (TR-TSY-000199/GR-199-CORE: TL1 Specifications on Memory Administration).

are software -controlled devices considered to be intelligent network elements because they can provide the following features:

- Remote Provisioning and rearrangement of the digital interconnections;
- Continuous service monitoring;
- Automatic equipment and facilities protection (self-healing capabilities); and
- Remote test access."

Example

In the case of a DS3 terminating on a DCS or EDSX, no physical DSX or crossconnect is required. At the time of construction (EF&I) the DCS or EDSX should be cabled via CFA directly to the CLEC collocation space or SONET ADM. Done this way, the CFA is effectively accomplished at the time the infrastructure is built. Once the infrastructure is in place, the cross connect takes place electronically in a mater of 2 seconds[64] in a mechanized flow-through manner via upstream OSS systems. Again, all new connects, disconnects, and rearrangements can then be accomplished in a flow-through manner from Operations Support Systems over a standard TL1/X.25 interface within 2 seconds (See Bellcore Technical Reference GR-199-CORE).

[63] Bellcore SR-TSV-002275, BOC Notes on the LEC Network, Issue 2 (April 1994), Section 9.2.2.2, pages 9-7 and 9-8.

[64] Reference Bellcore GR-199-CORE

Element Type 24: 2 Wire Loop, Different (Foreign) Central Office – (Migration)

Definition: A 2 Wire designed point-to-point designed circuit that is similar in design to a 2-wire FX circuit in that it is multiplexed up to a DS1 Transport on AD4 (Z office) and DCS (A office), and transported to another office where the CLEC physically collocates.

Objective: Migrate a 2 Wire Local Loop service for a CLEC customer in a different Central Office.

Environment: Migration UNE-Loop (see Model description for UNE-Loop description)

Key Drivers of Cost:
Variable Input
- Labor Rate
- Variable Overhead
- Fallout
- CO Staffed Ratio
- Average Trip Time
- Number of Work Activities per Trip

Work Value Input
- Manual Work Step Times

High Level Process Overview:

Transmission Type: Analog x Digital x.
Unbundled Loop: Yes x No __.
Examples of service used on this element type:
POTS, ISDN BRI (Virtual DS0's in a DS1)
FX
1MR, 1MB
1FR, 1MB

Time Estimates: Activity times are based on estimates by a panel of Subject Matter Experts.

Sample Output: See Attachment A

Detailed Work Activities: See Attachment B

Detailed Work Activity Descriptions:

Technical Description:
There may be situations where the CLEC may choose not to collocate in the same wire center serving the end user customer. This circuit, by its nature constitutes a designed circuit. If the 2-wire loop serves the end-user from a different CO or wire center, SMAS test points are modeled with unitized SMAS in the AD4 (ADTS). DS1 Inter Office Facilities (IOF) are used.
In the event that channel banks are a necessity (provided over what is considered DS0 Transport), as is the case of a 2-wire loop (analog or digital) served from a different CO or wire center than the end-user is currently served from (or physical collocation in a different wire center), a forward-looking automated D4 such as an AD4 Automated Digital Terminal System (ADTS[65]) should be assumed in the Z-office or wire center serving the end-user customer. An AD4 is considered a Processor Controlled Network Element (PCNE), supports multi-function channel units, and can be provisioned, monitored, tested, and inventoried from upstream ILEC legacy OSS systems. In this scenario, the SMAS points are assumed to

65 ADTS requirements and objectives can be found in Bellcore's TR-TSY-000174.

be unitized with the associated maintenance-connectors and cabling hardwired into the AD4 seven (7) foot or eleven (actually 11'6") foot bays (see Exhibits below). Conversely, it is also assumed that in the office where the CLEC has decided to collocate (A-office), that the DS1 IOF is terminated on a DCS, and that a DS1 CFA is handed off to the collocated space from the DCS. Consequently, the crossconnect (DS1) in the DCS is assumed to be electronic (CPU time) and flows-through from upstream OSS systems (TIRKS, NSDB, OPS/INE).
As a result of a designed service, the upstream OSS systems (e.g., TIRKS/FEPS) and appropriate work groups (e.g., NTEC,) are also assumed. *Finally, in the above scenario (different CO), the multiplexed (to DS0) DS1 and associated Multiplexer (AD4) is considered to be a DS1/DS0 Transport element.*

Migration:
- Use of WFA
- Pull and analyze the order (NTEC)
- Pull and analyze the order (SSC)
- 4-Work Activities per trip
- Trip time to non-staffed CO
- Travel time within the CO
- Negotiate customer release (CLEC and ILEC)
- Monitor circuit for traffic busy and correct assignment
- Check dial tone and ANI
- Terminate cross-connects on SMAS test points on toll frame
- Terminate cross-connects on LDPF (Cosmic-Type) frame
- Conduct testing - 1000hz (copper only)
- Conduct dial tone and ANI test
- Close the order (NTEC)
- Close the order (SSC)

Fallout:
It is assumed that fallout of the order will occur 2% of the time to the CPC Center because it is a designed service. The activities include the following:
- Pull and analyze the order
- Resolve the fallout

2/4 Wire Copper Loop Different CO (Combined with DS0 Transport)

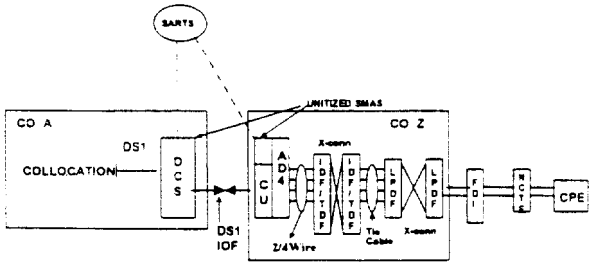

Notes: The IDF/TDF and LDPF (Cosmic-Type) are illustrated as 2 appearances on one frame to identify the cross-connect. If circuit is ISDN/BRI in the above example (different CO), then it is assumed that 3 BRITE Channel Units are installed as opposed to 1 FX Channel Unit installed if it is a POTS voice circuit.

Element Type 25: 2 Wire Loop, Different (Foreign) Central Office – (Install)

Definition: A 2 Wire designed point-to-point designed circuit that is similar in design to a 2-wire FX circuit in that it is multiplexed up to a DS1 Transport on AD4 (Z office) and DCS (A office), and transported to another office where the CLEC physically collocates.

Objective: Install a 2 Wire Local Loop service for a CLEC customer in a different Central Office (CO) or wire center.

Environment: Installation UNE-Loop (see Model description for UNE-Loop description)

Key Drivers of Cost:
Variable Input
- Labor Rate
- Variable Overhead
- Fallout
- Copper Loop Percentage
- Average Trip Time
- Number of Work Activities per Trip
- CO Staffed Ratio

Work Value Input
- Manual Work Step Times

High Level Process Overview:

Transmission Type: Analog x Digital x.
Unbundled Loop: Yes x No __.
Examples of service used on this element type:
Foreign Exchange (FX)
POTS, ISDN/BRI
1MR, 1MB
1FR, 1FB

Time Estimates: Activity times are based on estimates by a panel of Subject Matter Experts.

Sample Output: See Attachment A

Detailed Work Activities: See Attachment B

Detailed Work Activity Descriptions:

Technical Description:
There may be situations where the CLEC may choose not to collocate in the same wire center serving the end user customer. This circuit, by its nature constitutes a designed circuit. If the 2-wire loop serves the end-user from a different CO or wire center, SMAS test points are modeled with unitized SMAS in the AD4 (ADTS). DS1 Inter Office Facilities (IOF) are used.
In the event that channel banks are a necessity (provided over what is considered DS0 Transport), as is the case of a 2-wire loop (analog or digital) served from a different CO or wire center than the end-user is currently served from (or physical collocation in a different wire center), a forward-looking automated D4 such as an AD4 Automated Digital Terminal System (ADTS[66]) should be assumed in the Z-office or wire center serving the end-user customer. An AD4 is considered a Processor Controlled Network Element

66 ADTS requirements and objectives can be found in Bellcore's TR-TSY-000174.

(PCNE), supports multi-function channel units, and can be provisioned, monitored, tested, and inventoried from upstream ILEC legacy OSS systems. In this scenario, the SMAS points are assumed to be unitized with the associated maintenance-connectors and cabling hardwired into the AD4 seven (7) foot or eleven (actually 11'6") foot bays (see Exhibits below). Conversely, it is also assumed that in the office where the CLEC has decided to collocate (A-office), that the DS1 IOF is terminated on a DCS, and that a DS1 CFA is handed off to the collocated space from the DCS. Consequently, the crossconnect (DS1) in the DCS is assumed to be electronic (CPU time) and flows-through from upstream OSS systems (TIRKS, NSDB, OPS/INE).
As a result of a designed service, the upstream OSS systems (e.g., TIRKS/FEPS) and appropriate work groups (e.g., NTEC) are also assumed. *Finally, in the above scenario (different CO), the multiplexed (to DS0) DS1 and associated Multiplexer (AD4) is considered to be a DS1/DS0 Transport element.*

Installation:
- Use of WFA
- 4-Work Activities per trip
- Pull and analyze the order (NTEC)
- Pull and analyze the order (SSC)
- Trip time to non-staffed CO
- Travel time within the CO
- Terminate wire wrap cross-connects to AD4 ADTS Channel Bank/unitized SMAS
- Terminate cross-connects on LDPF (Cosmic-Type) frame
- Conduct testing - 1000hz
- Conduct continuity test (dial tone and ANI)
- Close the order (NTEC)
- Close the order (SSC)

Fallout:
It is assumed that fallout of the order will occur 2% of the time to the CPC Center because it is a designed service. The activities include the following:
- Pull and analyze the order
- Clear the jeopardy - Manual design process

Notes: The IDF/TDF and LDPF (Cosmic-Type) are illustrated as 2 appearances on one frame to identify the cross-connect. If circuit is ISDN/BRI in the above example (different CO), then it is assumed that 3 BRITE Channel Units are installed as opposed to 1 FX Channel Unit installed if it is a POTS voice circuit.