CONTENTS

1. SUMMARY 5
2. SCOPE 6
2.1 Document Organization 6
3. OBJECTIVE 8
4. RFI POLICY, GUIDELINES, LIMITATIONS AND TIMESCALES 9
4.1 Intellectual Property Rights Matters 9
4.2 RFI Policy 9
5. CONFIDENTIALITY OF INFORMATION 10
5.1 Confidentiality of Verbal Information 10
6. FORMAT OF RESPONSE INFORMATION 11
7. INTRODUCTION 12
7.1 Purpose 12
7.2 Background 13
7.3 Market Environment 14
7.4 Development Drivers 18
8. BELLSOUTH'S REQUIREMENTS 20
8.1 PSAP Requirement 20
8.2 BellSouth Preferred Solution 22
9. LOCATION TECHNOLOGY SOLUTIONS 30
9.1 Impact on Wireless Network 30
9.2 Technology Requirements 33
9.3 Timing 36
9.4 Alternative Solutions 36
9.5 Secondary System Considerations 37
10. CHECKLIST OF RFI QUESTIONS 39

APPENDICES

APPENDIX A REFERENCES **52**

APPENDIX B GLOSSARY **53**

APPENDIX C MAILING LIST **56**

LIST OF FIGURES

Figure 8.1 A Network-Centric Solution *23*

Figure 8.2 A Mobile Subscriber Terminal based Solution *24*

Figure 9.1 Spectrum of Network Integration *30*

Figure 9.2 Technology/Performance Issues Map *33*

1. SUMMARY

The purpose of this document is to solicit information about the technical feasibility of providing wireless caller location for E911 emergency services. Information is sought from suppliers of technology, hardware, software, network and operational support infrastructure and subscriber terminals within the emerging and broader wireless telecommunications industry.

Currently, wireless services do not provide adequate caller location information to allow intelligent routing of an emergency 911 call to an appropriate PSAP or response agency through the PSTN. Indeed, in many emergency situations the caller is not aware of their exact location or is suffering additional disorientation caused by the emergency. This lack of location information often extends the call process and delays the dispatch of the proper response agency.

Fundamentally, there are two issues to be addressed for wireless services to provide wireline-compatible emergency 911 information. First, the mobile nature of wireless telecommunications and the unique characteristics of radio communications make location information difficult to determine. Second, once the location information is known, it has to be transferred seamlessly and rapidly through the interconnecting networks to the appropriate rapid response agency. Before high quality location information can be advantageously used to satisfy the requirements of routing to the appropriate PSAP service provider for a timely response, a number of advances must be made in wireless telecommunications systems, the associated interconnecting networks, and the PSAP systems themselves.

The choice of which location technology is 'best' suited for the 911 application is a complex question that has to be evaluated with the application requirements firmly in view. The impact on the wireless network infrastructure will determine the optimal suitability of the myriad of technologies under development.

Due to the complexities of the existing and emerging wireless marketplace (multi-standards environment and multiplicity of service providers), BellSouth believes that the preferred solution for incorporating wireless location functionality is likely to be 'network-centric'. With approximately 30 million cellular subscribers, and growth rates that lead to a doubling of that number along with an additional 10 million PCS subscribers by the year 2000, the installed subscriber terminal base is an important consideration. The level of network integration, it is recognized, will change with time as improved performance location technology becomes commercially feasible. However, a mobile subscriber terminal based solution, on a going forward basis, may provide additional capabilities or advantages. A subscriber terminal based solution will have significant hurdles to overcome, such as size, weight, battery life, cost, etc.

This RFI seeks to answer some the critical questions regarding the impact of implementing a location technology in the wireless network, the factors affecting the choice of location determining technology, the feasibility, timing and cost effectiveness of a solution in the near future. Importantly, this RFI is seeking the answers to these questions from as wide an audience as possible, including emergency service providers, wireless and wireline service providers, as well as technology suppliers and developers.

2. SCOPE

This RFI is being issued by BellSouth Wireless, Inc. BellSouth stands at the top of the telecommunications industry as a world leader in mobile communications. BellSouth and its partners operate mobile systems in 15 countries, serving more than 5.7 million cellular, paging, and mobile data customers in service areas with a combined population of more than 360 million.

BellSouth serves more than 3 million cellular customers, on a proportionate basis, in numerous cities across the US, including Los Angeles, Houston, Atlanta, Miami, and Milwaukee.

BellSouth Personal Communications, Inc. (PCI) will operate a wireless voice and data network in the 1.8 GHz range in two MTA's covering most of North and South Carolina, the eastern third of Tennessee, and portions of eastern Kentucky and southwest Virginia.

BellSouth's European cellular networks are based on the GSM standard. The company is a pioneer in exporting the GSM standard to countries outside of Europe, as it has done in Australia, New Zealand and India.

This RFI is for emerging and existing technology, equipment and systems capability that will enable BellSouth to provide wireless access to enhanced 911 emergency services to its current and future customers. This effort is directed as an inquiry into the technical solutions and functional requirements for wireless location to provide capabilities in the cellular, PCS and other wireless markets. Primary focus is the domestic US market; however, implications for international markets will be considered.

This RFI is being released to the industry in as broad a way as possible to include core technology developers, suppliers, equipment developers and manufacturers, network infrastructure and systems support suppliers and integrators, emergency service providers and organizations who could potentially contribute to the development and implementation of wireless location for enhanced 911 emergency services.

BellSouth will review all information, and any proposals, supplied as a response to this RFI. The evaluations will not be disseminated to any organization outside of BellSouth and its affiliated companies. There will be no ranking of responses, nor will there be an "approved vendor" list resulting from this RFI. Discussions may follow with a selected group of organizations to further the development and test of possible solutions. Respondees have an opportunity via this RFI to contribute to BellSouth's wireless vision.

2.1 Document Organization

This document is organized as follows:

- Sections 1, 2, and 3 contain the Summary, Scope, and Objective of this RFI, respectively.
- Section 4 contains the RFI Policy, including licensing, and mailing address for responses.
- Section 5 contains the Confidentiality of Responses which outlines the protection afforded to vendor information and proposals

- Section 6 contains the Response Preparation Instructions and the Format that vendors should follow in submitting information and proposals.
- Section 7 contains the Introduction, which describes the purpose, background, market and technological environment to the request.
- Section 8 explores the emergency call answering service providers' requirements and outlines the BellSouth's requirements for a wireless location solution. These requirements form the basis of this RFI.
- Section 9 contains a discussion related to wireless location enabling technologies and explores the issues and possible impact of the requirement.
- Section 10 contains a complete checklist of the key questions posed throughout the sections of this RFI.
- Appendix A contains a list of references and source material that pertain to the development of this RFI.
- Appendix B contains a list of terms and-acronyms.
- Appendix C consists of the RFI mailing list.

3. OBJECTIVE

In October 1994, The Federal Communications Commission released a Notice of Proposed Rule Making, CC Docket No. 94-102 regarding wireless access to enhanced 911 (E 911) emergency services. BellSouth supports the FCC's objective that "all mobile radio services offering access to real-time voice services provided on the public switched network" should be capable of providing access to emergency services. Establishing ubiquitous wireless access to emergency services must be a coordinated effort among numerous affected groups, including wireless service providers, equipment vendors, manufacturers, local exchange carriers (LECs), public safety answering point service providers (PSAPs), etc.

A great deal of work has already been done by many of these groups addressing the development of the most efficient means of accessing E 911 emergency services from the wireless networks. BellSouth has been an active participant in many of the joint working groups formed to assist in the development of standards for the implementation of wireless access to emergency services, including the development of recent positioning papers by PCIA and TIA (see Appendix A References).

The objective of this RFI is to determine the technical feasibility of providing wireless caller location for E 911 emergency services. As part of that objective BellSouth is aiming to:

- build an information base to enable BellSouth to understand the market and technical environment for providing wireless location services
- ascertain the availability of critical elements, including needed technology development
- stimulate further development
- assemble support from potential suppliers
- encourage industry cooperation to accelerate the development of relevant standards, and to provide leadership so as to guide the regulatory process
- invite proposals and recommendations for joint development and testing.

The information and any resulting proposals or recommendations collected during this RFI process may be used to influence BellSouth's future development plans.

In addition, if location technology is to be deployed as part of enabling wireless access to enhanced emergency services, BellSouth is very interested in exploring other commercial services that would expand the use of the technology and accelerate its development. BellSouth is extremely interested in sharing information that might support such developments, and thereby affect the choice of technology

4. RFI POLICY, GUIDELINES, LIMITATIONS AND TIMESCALES

4.1 Intellectual Property Rights Matters

Vendors will be expected to obtain all necessary intellectual property rights for all technology, hardware, software and systems relevant in response to this RFI. In addition, vendors must identify, within their information or proposals, any proprietary technology embodied in the equipment, software or systems supplied in response to this RFI.

BellSouth would prefer that vendors be willing to cross-license any proprietary technology to other qualified developers and manufacturers in order to avoid single-sourcing and to promote interoperability among the equipment and systems. Vendors should include a statement that clearly expresses their company policy toward licensing technology to other vendors.

4.2 RFI Policy

Any entity who intends to respond to this RFI must submit a letter or fax by the close of business on **Friday March 22, 1996**, as evidence of their intention to supply information. This should be sent to the following address:

BellSouth Wireless, Inc.
Room 803
1100 Peachtree Street NE
Atlanta, GA

Fax: 1-404 249 5157 or
1-404 249 4343

Attention: Mr Stephen M. Blust, Project Manager

Tele: 1-404 249 5058

Entities that have sent an intent-to-supply letter should submit 3 original copies of their information packages by close of business on **Thursday April 19, 1996**, to the above address.

BellSouth reserves the right to extend the above-mentioned intent-to-supply and/or RFI response deadlines or change in any way these submission provisions.

5. CONFIDENTIALITY OF INFORMATION

All information supplied to BellSouth in response to this RFI shall be submitted by each company without any obligation of confidentiality on the part of BellSouth, unless the information is appropriately labeled as "CONFIDENTIAL" and is not within any of the exceptions to confidentiality set forth below ("Confidential Information"). Except as required in connection with review and evaluation of the information or proposals, BellSouth will not disclose any Confidential Information supplied by any company without prior written consent of that company. Access to Confidential Information supplied in response to this RFI shall be restricted to those officers, board members, employees, consultants, and other agents of BellSouth or any of its affiliates who have a need to know the information to properly accomplish their review and evaluation activities.

Confidential Information shall not include any information which:

- prior to supply is known by, or is in the possession of, BellSouth or any of its affiliates without any restriction on its use or disclosure;
- is currently available, or becomes available, to BellSouth or any of its affiliates from a third-party without any non-disclosure obligation in favor of the company originally supplying the same;
- is or becomes generally known or readily ascertainable in the telecommunications industry (or industries supplying or servicing that industry) through no fault of BellSouth; or
- is independently developed by BellSouth or any of its affiliates.

BellSouth shall have the right to disclose Confidential Information in response to a court order or government authority's request, after first notifying the company owning such Confidential Information of such disclosure.

5.1 Confidentiality of Verbal Information

If information which is considered to be confidential is presented verbally, the following procedure must be adhered to.

- The confidential information shall be noted as such during the verbal presentation; and
- All confidential material presented verbally shall be reduced to writing by the disclosing party within fourteen (14) days.

Any obligation to maintain the confidentiality of Confidential Information supplied by any company in response to this RFI shall terminate and all non-disclosure obligations shall cease two (2) years following the date of supply.

6. FORMAT OF RESPONSE INFORMATION

To facilitate consistency of content and structure across vendor responses, a format is described to guide vendors. **Vendors should use this format where possible, but it should not prevent vendors from presenting any information that might be useful to BellSouth.**

Vendors are therefore requested to provide information in three separate sections according to the following structure:

1. Discuss the vendor's view of the evolution of wireless location for emergency 911 in the cellular, PCS, SMR and other wireless industries, focusing on the key drivers for the industry over the next 5 years and the estimated time when they will come into play.
2. Provide answers to the questions contained within the body of the RFI in the format of the table contained in Section 10.
3. Comment on any other aspects of the discussion text contained within the RFI and cross-reference their comments according to the section or subsection of the original text.

As a general rule, the sequence of topics and issues contained in vendor responses must mirror that of this RFI. Hence, all section and subsection numbering schemes contained in vendor responses must correspond to those contained herein. If vendors wish to supply additional information, they should do so by making reference to the additional material within the section or subsection that most closely relates and attach the material as an appendix.

Due to the broad nature of the topic, it is recognized that not all questions may be appropriate for all vendors. BellSouth is interested in any and all views on the topic of wireless user location for 911, even if a responding vendor is able to address only a very narrow area.

Vendor responses should be constructed to conform with the following publishing and editing guidelines:

- Single-sided, single line spaced text using 12 point characters of an easily readable font of the vendor's choosing, on US letter (8.5" by 11") or A4 (210 by 270 mm) size paper.
- All text pages must have a minimum of 1" blank vertical margins (left and right). The pages must be clearly numbered, with title designators if the vendor so chooses, and printed in black on white paper only.
- Pages are to be bound in standard 3-ring binders to permit page removal and re-insertion.
- **3 copies of the response must be provided.**
- Additionally, suppliers may provide their responses in soft copy format to augment their supplied hard copy. This should be provided in Microsoft Word contained on floppy disk, clearly labeled with system type (i.e. Macintosh or Windows) and version of application software.
- Pre-printed brochures, flyers, or other publications may be provided under separate cover or contained in a separate holder within the response binders.

7. INTRODUCTION

7.1 Purpose

The purpose of this RFI is to solicit information and recommendations from the wireless telecommunications industry developers and suppliers addressing the feasibility of automatically locating wireless based 911 callers / mobile subscriber terminals using cellular, PCS, SMR or other wireless service networks.

7.1.1 Audience

This document is targeted at the following organizations:

1. Service Providers
   - Emergency Service or Public Safety Answering Point (ESAP or PSAP) service providers, emergency services agencies and associations such as Association of Public Safety Communications Officials International, Inc. (APCO), National Association of State Nine-One-One Administrators (NASNA), National Emergency Number Association (NENA).
2. Telecommunications Service Providers
   - Wireless and Wireline telecommunications carriers and service providers.
3. Equipment Suppliers
   - Wireless telecommunications equipment suppliers including vendors of Mobile Subscriber Terminals, Base Stations and Base Station Controllers and Switches, Database Management Systems
   - Fixed network equipment suppliers, including vendors of Switching systems, Transmission systems, and Operations, Administration and Maintenance (OA&M) systems.
   - Suppliers of Intelligent Network equipment including Service Control Points (SCPs), Service Switching Points (SSPs), Intelligent Peripherals (IPs), Service Creation Environments (SCEs) and Service Management Systems (SMSs).
4. Technology Suppliers
   - Suppliers of location determining technologies and systems appropriate to the wireless telecommunications industry, including sub-systems and components, functional processing and codec devices, RF modules and devices, and chipsets.
   - Suppliers of components that may deliver increased optimization and flexibility to wireless equipment such as RF signal processing technologies, 'smart antennas' and other wireless system enhancement technologies.
5. New Entrant Organizations
   - Organizations who could be involved in the potential development of the cellular, PCS and/or wireless telephony market in any way, such as the specification of APIs (Application Programming Interfaces), the development of

operating systems, GPS, GIS or other location/mapping and support systems, the sponsorship of industry forums, and so on.

7.1.2 Information Requested

The information being sought relates to the availability of location determining technology and systems required to support wireless location for E 911 emergency services and potentially other business services. It is highly possible that solutions recommended or discussed may not be developed fully at this time; however, such advanced information will be of interest to BellSouth. The status of developments should be clearly noted.

The topic discussed in this RFI covers a very broad area and has impact potentially on the complete network, end-to-end, with a variety of technologies and possible solutions. Therefore, in providing information against any question contained in this document vendors are strongly encouraged to identify additional requirements, and recommended solutions.

Additionally, BellSouth seeks information on the incentives that can be offered to encourage the development and supply of wireless location technology and supporting network systems. Such incentives could include for example:

- The sponsorship of industry forums
- The funding of 'proof of concept studies'
- Advance orders for equipment

Please note that the mention of the above examples does not in any way imply a commitment by BellSouth to offer any incentives to any party. Additionally, the list above is not exhaustive; any alternative suggestions from the industry are welcome.

7.1.3 Availability Timescales

It is recognized that the developments about which information is sought will be available over a range of timescales. For the purpose of this RFI, the timescales that should be considered are:

T1. Immediate availability or within one year of the release date of the RFI

T2. One to three years from the release date of the RFI

T3. Three to five years from the release date of the RFI

T4. Five or more years from the release date of the RFI

Please note that information on timescales needs to be purely indicative only and that no commitment will be viewed as having been made when availability is discussed by a vendor.

7.2 Background

Emergency 911 systems in existence today have been developed to provide rapid response to calls for emergency service from wireline telecommunications subscribers (connected to the fixed wireline public switched telephone network, PSTN). Basic 911 (B 911) emergency systems establish routing of calls to a Public Safety Answering Point (PSAP). The PSAP service provider has the responsibility for connecting the caller to the appropriate emergency response agency or forwarding to another PSAP for response. Enhanced 911 (E 911) systems provide added capabilities that include selective routing of calls to a more appropriate geographical or

jurisdictional PSAP for rapid response, the display of calling number, address, and in most cases, the primary subscriber's name. From this information the PSAP can obtain further information from its own database regarding selective responses, pre-notified contact information (such as on-site security officials, or building/facilities management contacts) and /or appropriate response agencies. The PSAPs' databases are developed from telephone companies' subscriber billing records and reference a central dedicated 911 master street address guide geo-file (MSAGs).

For wireline services it is possible through these systems with their multiple databases, to provide location and appropriate response information to enable rapid response to an emergency situation. However, these emergency service systems do not address the unique characteristics of mobile radio-telecommunications services (wireless services).

Currently, wireless services do not provide adequate caller location information to allow intelligent routing of an emergency 911 call to an appropriate PSAP or response agency through the PSTN. Indeed, in many emergency situations the caller is not aware of their exact location or is suffering additional disorientation caused by the emergency. This lack of location information often extends the call process and delays the dispatch of the proper response agency.

Fundamentally, there are two issues to be addressed for wireless services to provide wireline-compatible emergency 911 information. First, the mobile nature of wireless telecommunications and the unique characteristics of radio communications make location information difficult to determine. Second, once the location information is known, it has to be transferred seamlessly and rapidly through the interconnecting networks to the appropriate rapid response agency. Before high quality location information can be advantageously used to satisfy the requirements of routing to the appropriate PSAP service provider for a timely response, a number of advances must be made in wireless telecommunications systems, the associated interconnecting networks, and the PSAP systems themselves.

Developments of location technologies are advancing rapidly and there is a number of developments underway that might improve wireless E 911 emergency service. However, these technologies have and are being developed independent of the 911 application. The choice of which location technology is 'best' suited for the 911 application is a complex question that has to be evaluated with the application requirements firmly in view. The impact on the wireless network infrastructure will determine the optimal suitability of the myriad of technologies under development.

7.3 Market Environment

While some wireless systems are capable of providing basic 911 service, few currently provide enhanced 911 service. In major metropolitan areas, it is estimated that as many as 10% of the 911 calls originate from mobile radio service subscribers. It is expected that by the end of the century there will be more than 60 million cellular and approximately 10 million PCS subscribers. This unprecedented growth of mobile radio service subscribers will undoubtedly increase significantly the number of wireless 911 calls initiated; estimated to approach or even exceed the volume of wireline 911 calls by the year 2000. In addition, mobility coupled with this higher ownership of mobile equipment will result in multiple calls for the same incident being reported by mobile radio subscribers, thereby compounding the growth potential for increased wireless 911 originations. It has been noted by several public safety agencies that there is an

increase in hoax calls due to wireless access causing problems for the 911 network and PSAP service providers.

In order for there to be consistency between wireline and wireless enhanced 911 services, it is recognized that there needs to be significant investment by the emergency service providers, local telecommunications companies, and equipment manufacturers. In particular, the equipment used by the PSAPs would have to the modified to permit the use of geographic (coordinate) data instead of street addresses. Precise location information will require the expansion of their databases and supporting networks, particularly for relaying accurate key database services (such as Automatic Location Identification, ALI). The need for enhanced or new standards is extensive and will only be possible with contributions from all interested parties. Industry committees are expected to continue their work to-date to develop these standards working in conjunction with PCIA, APCO, NENA, and NASNA, among others. Standards bodies include ATIS and TIA.

Regulatory pressures aside, once widely deployed the market pressures for enhanced wireless 911 emergency access will undoubtedly be clouded by the deployment of emerging PCS services and further developments in cordless technologies. However, given the continued growth of wireless services, public concern for adequate emergency services through 911 access will continue to build.

7.3.1 Timescales

The deployment of wireless 911 location capability is expected to be phased to exploit the developments of the enabling technologies and to allow the efficient migration of equipment and services.

The FCC in its initial thinking proposed three stages for deployment, from the effective date of a ruling (see Appendix A: CC Docket No. 94-102):

1. **1 year:** Limited ALI, at a minimum, should be routed to the PSAP closest to the mobile caller. This information should include location of the base station receiving the 911 call and, if sectored antennas are employed, the direction (sector) of the mobile unit from the base station or cell site.
2. **3 years:** More precise ALI, provided to the PSAP to include approximate location of the caller and distance from the receiving base station or cell site.
3. **5 years:** Accurate, to within 125 meters, 3-dimensional location of the mobile caller should be provided to the appropriate PSAP. Even greater accuracy is expected for urban environments to provide precise location of a caller, particularly within a multi-story structure.

While supporting a staged approach to deployment, BellSouth has concerns that the time frames for the provision of certain 911 features may be premature at this time. These time frames would require affected groups to develop interim solutions which actually could delay the long term deployment and increase the cost of more advanced features. Additionally, the development of interim solutions to meet such a timetable is likely to result in costly "throw-away" technology, diverting resources away from the long term goal of providing reliable and high quality user information to improve emergency call response.

Since the release of the FCC Notice of Proposed Rulemaking, there has been much discussion about the appropriateness of the above three stages for deploying wireless E911 capability. BellSouth's preferred objective is a two stage deployment. Therefore, in producing this RFI, BellSouth is keen to receive information and development plans that will enable the development of realistic time frames for the deployment and definition of the features required to facilitate E911 emergency services.

7.3.2 Network Integration

Technology is being developed, in some cases to fairly advanced stages of testing, to provide mobile callers' location information; however, to date little has been done to address the potential impact on the network. As mentioned earlier, one of the key issues about providing compatible 911 location information from a wireless system is the capability of automatic and seamless transfer of information over the wireless network and between interconnecting networks to the selected PSAP via the PSTN.

Within this issue of information transfer there are three key points that need to be addressed:

- availability, timing and accuracy of information;
- data flow management (synchronization of calls with corresponding location information);
- tracking of calls as they are handed-off between base stations, cell sites or networks;

The relative impact on the network will depend on the choice of technology and the method used to ascertain location information. At one end of the spectrum of solutions, subscriber terminal-based location technology may at first glance require little modification to the network; however, in addressing the points above it can be seen that implementing a stand alone location system that only interfaces with the network at the furthest point from the caller, ie., at the PSAP database, has major requirements for call and data management fundamental to the wireless network. In addition, this solution may also require commonality at the technology level for all wireless service providers, in order to allow mobile subscribers to roam between networks and service providers. Alternatively, at the other end of the spectrum, a totally integrated "network-centric" solution will require an open approach by all parties supplying the equipment through to the service itself. Co-development of standards, interfaces, technology and solutions end-to-end is required.

Importantly, the level of network integration designed in at this formative stage will also determine the migration or evolution path to future solutions.

7.3.3 Migration

Any timescales proposed must allow further developments in location technology to be exploited, while permitting phased enhancements to the wireless network. Therefore, in selecting and developing a solution, wireless service providers have to weigh the needs of the future against the cost of deployment in the short term. This decision process can often lead to the initial deployment of the 'best' technology today, to be thrown away and replaced by a 'better' fully capable and flexible solution sometime in the future.

The strategic solution will maximize on convergence where possible allowing planned migration through intermediate implementations. There are several points of potential convergence

including key network interconnections such as the PSAP database and interfaces, wireless service providers subscriber databases, key data elements such as ALI, ANI, and different wireless network interfaces. In order to develop a realizable solution we would expect to see a migration path that includes developments in core network elements and the interfacing mechanisms such as IS-41 and GSM-MAP, AIN, CCS, SS7, and OA&M systems.

7.3.4 Standards Environment

The commercial mobile radio service or wireless arena includes cellular, PCS and SMR. These comprise a broad family of services and technologies. The ability of a specific technology to provide location information is only one factor in the selection of an air interface and system configuration.

Some JTC standards considered for PCS include:

i) PCS 1900

ii) Up-banded IS-54 / IS-136

iii) Up-banded IS-95

iv) PACS

v) Omnipoint Hybrid CDMA/TDMA

And at least nine other existing or proposed technologies for 800 MHz wireless systems:

i) AMPS

ii) NAMPS

iii) IS-54 / IS-136 US Digital Cellular

iv) IS-95 CDMA

v) E-TDMA

vi) Motorola IDEN ESMR

vii) Geotek ESMR

viii) Other ESMR/SMR technologies.

In addition, although there have been efforts by TIA, PCIA and the Public Safety community in this direction, there are no standards for interfacing with PSAP service providers or other network carrier systems, particularly those standards that affect network connection and interconnection such as for common channel signaling, SS7, IS-41, GSM-MAP, AIN and other OA&M functions.

Appendix A refers to the background material and the outputs of standards development underway by the leading sponsoring groups.

The PCIA has been developing a standards requirement for wireless personal communications to support E911 services. It released its SRD for ballot in January 1996.

TIA subcommittee TR-45.2 *Ad Hoc* Group is in the midst of developing standards for wireless support of E911 emergency services, and has recently released its position supporting the

deployment of E911 services for user of wireless telecommunications. Dated January, 1996. This group is also addressing issues on Stages 1 and 2 of the four stage evolutionary approach agreed to at the JEMs held in 1994, and are in the process of drafting a standard defining the protocol interfacing to and between wireless network elements.

7.4 Development Drivers

Location technology has to date been developed for applications outside of the scope of this one. In particular, they have been developed for navigation, guidance or global mapping applications such as Global Positioning Systems (GPS) and Geographical Information Systems (GIS) that exploit data available from orbiting satellites.

GPS is a satellite navigation system deployed by the US military, but widely used by commercial and civil applications. The system consists of a constellation of 24 satellites spaced in six orbital planes at 10,900 nautical miles above the earth. For security reasons, GPS accuracy is intentionally degraded by the US government to 100 meters (with a 95% confidence factor), but average accuracy can be about 50 meters. When used in conjunction with differential techniques, mapping or other information systems (such as dead reckoning, or map overlays), navigational accuracy is achievable to better than a few feet. However, moves are underway to remove the imposed degradation, so as to allow primary GPS location accuracy to an order of a few feet.

Other technologies have been developed for vehicle tracking, for security monitoring, identification and/or fleet management, which include radio directional finding (RDF) techniques, radiating tags or more sophisticated transponder systems operating in the unregulated Industrial, Scientific and Medical (ISM) frequency band of 902 - 928 MHz.

Another technique that lends itself to this E911 radiolocation application is time-difference-of-arrival (TDOA). This technique measures the time difference for a radio signal to travel to multiple reception points, such as a mobile terminal transmitting to three or more base stations, or conversely signals transmitted from multiple fixed points to be received by a mobile terminal. By the process of triangulation, the location of the mobile terminal can be determined. There are several possible developments of this technique including one for the CDMA radio air-interface and an overlay technique that uses local FM radio station transmissions.

All the above technologies are at varying degrees of implementation, and as always the cost of deployment is heavily dependent on market volumes. Therefore, a mobile telecommunications application such as the one under discussion for 911 location represents a very attractive target for developers of the technology.

Consequently, there are many possible technological solutions for determining a 911 caller's location. For convenience, they can be grouped to include:

- Systems which determine the location of the caller's mobile subscriber terminal using the indigenous radio signals or additional signals transmitted over the wireless network being accessed. These systems may require an overlay to the existing wireless network, or require a modification to the hardware or software in the mobile subscriber terminal.
- Systems which require an external network or infrastructure to the wireless network to compute the location. These systems either use an existing network or infrastructure to

determine the location or compute position based on a proprietary network of antennas deployed about a geographic area.

- Radio-based location technologies currently under development but which are not being currently targeted at this application.
- Vehicle mounted, handheld devices or other system configurations to be used in conjunction with a mobile subscriber terminal.

The choice of which technology will be best suited to the wireless telecommunications environment for 911 location will be determined by a number of critical drivers:

- wireless network air-interface compatibility, and multi-mode capability;
- applicability to many wireless service networks;
- development status and likely availability;
- its impact on existing and future networks and services;
- ease of implementation and deployment, with phased migration and enhancement possibilities, including impacts on installed infrastructure and user base;
- cost (both initial, distributed and maintenance);
- transparency to the wireless services subscriber; and
- standards for location requirements, network interconnection and PSAP interfacing.

This RFI seeks information on location technologies appropriate for providing integrated wireless E911 services. This document explores many of the topics and issues raised above, and seeks information from the industry to facilitate the development and eventual deployment of the most suitable approach.

8. BELLSOUTH'S REQUIREMENTS

8.1 PSAP Requirement

At a minimum, 911 access through the wireless network should be transparent to both the mobile subscriber and PSAP. The call connection should be consistent in performance relative to wireline 911 calls.

These simple requirements have considerable impact on the wireless network, aside from the location technology alone. Also, there is impact on the PSAP, primarily in the type of information that is provided (e.g., the PSAP system must accept an ALI providing geographic data rather than street addresses). However, the choice of wireless location technology will be determined by its ability to achieve two fundamental objectives:

- Routing the emergency call to the appropriate PSAP, and
- Directing emergency response resources to the correct site.

In current wireline systems offering E 911, there is an intermediate 911 switching system or tandem between the wireline caller's central office and the PSAP. This switching system uses the caller's telephone number and a database to determine which PSAP should get the call. It also provides quick call transfers to other agencies and efficient concentration of dedicated lines or trunks from the area's central offices to an appropriate number of trunks that actually go to the PSAP. The use of an Automatic Number Identification (ANI) is the most common method for transferring the caller's telephone number to the PSAP. The ANI is used to point to a location database, the ALI/DMS. The ALI/DMS provides address and subscriber information to permit selective routing to the preferred PSAP, based upon political jurisdiction as well as central office boundaries.

Wireline E 911 services provide the PSAP with a street address and the telephone number of the caller. This provides the PSAP the ability to direct emergency response resources to the specific site from which the call originated if, indeed, the emergency is located at the call origination site. This data is typically available to the PSAP no later than five seconds after the 911 call has been received. As stated earlier, a wireless location technology is more likely to provide the PSAPs with geographic data rather than a street address. However, this geographic data will be required to offer something other than longitude and latitude. The location technology will need to map coordinates onto some recognizable database (i.e., street names and intersections, highways and mileage marker, etc.) and provide the PSAP with enough information to dispatch the emergency response team to the correct area.

Since PSAPs serve specific geographic areas that may overlap, but not necessarily map onto the wireless network, the ability to respond in a timely manner to an emergency call is highly dependent on routing the call to the proper PSAP. For the case of a cell or sector that exists within a single PSAP responsibility area, the location capability may be available today at this resolution. However, for cells/sectors at a PSAP border, a call that moves between PSAPs, or reflections that mask the true position of a subscriber, more sophisticated techniques may be required. Regardless of the location technology, sufficient caller location information for routing the 911 call to the appropriate PSAP should be available within, and not delay, the normal call processing interval. This interval can be of the order of two to five seconds. Longer delays to

the PSAP taking a wireless 911 call may be unacceptable. PSAP call takers will expect the same information delivery performance, regardless of the network from which the call originates. As the average duration of an emergency call is of the order of one minute, the wireless location technology should not impede this performance.

Emergency mobile radio subscriber callers may be either indoors or outdoors. The elements of information which accurately identify the caller's specific location can vary widely. Generally, indoor callers can be identified by a particular street address. However, this information does not usually state the specific area of the building such as floor or room. In large complexes, such as high rise or campuses, determining the caller's location can be substantially more difficult. As a result, therefore, precise location information will need to be provided in order to direct an emergency response team accurately to the site of the emergency. If the wireless 911 call originates from within a building, it is necessary to provide, at a minimum, a street address of that building. This implies that there will be a need to ensure there is an accurate mapping between wireline and wireless location databases. Indeed, at some point these two separate databases may be merged to form a single geo-file at a PSAP, or available centrally to all PSAPs.

In addition, due to the nature of a wireless 911 call, an outdoor caller's position may change during the duration of the call. As an example, a 911 call may originate outside of a building, but the caller may then enter some premises to arrive at the emergency site, seek shelter from the weather, etc. Likewise, the reverse scenario may take place. Therefore, the PSAP call taker will expect dynamic, real-time updating of the callers location.

Question 1. PSAP Routing Requirements

Respondents are asked to comment on the requirements for routing to the appropriate PSAP, and to provide specific information and/or comment on the following:

a) What are realistic expectations of location accuracy and time (to provide a reading) performance for a wireless location technology? Is accuracy dependent on time? When is the location information available?

b) What confidence factors could be attributed to the location data within the quoted time period? How does this factor vary with time?

c) Are the time constraints to route to the appropriate PSAP as posed above realistic? What issues will affect the time to deliver accurate location information?

Question 2. PSAP Emergency Response Requirements

Respondents are asked to comment on the following:

a) What are the issues surrounding the availability of sufficient location information to direct emergency response resources to the correct site.

b) What type of location information can be provided by a wireless technology (i.e., street intersections, highways, etc.)?

c) How could this location information be merged with a wireline location database? Who would be responsible for developing the "mapping"?

d) What type and/or accuracy of location information might be available within the timeframes of this RFI as stated in section 7.3.1?

Question 3. Dynamic location updating

The respondents are asked to provide their views on providing dynamic location/tracking information to the PSAP. Also, specifically, to provide information on the following:

a) Can the ability to track a subscriber whose location changes (indoors/outdoors) be accommodated? Will dynamic location information also be available?

b) What level of location resolution may be available on a periodic or continuous basis? What is the update interval?

c) How will the dynamic information be expected to be merged with the call? What data flow management information is necessary?

8.2 BellSouth Preferred Solution

BellSouth's solution has the following characteristics:

i) BellSouth's likely preferred solution is totally "network-centric" and has no requirement to modify the mobile subscriber's terminal in anyway. Alternatively, in a mobile subscriber terminal based solution the E911 location function is operationally user-transparent and is contained in a single integrated package.

ii) has clearly defined points for network interconnection or uses standard interfaces; therefore allows minimal operational interference during deployment and testing.

iii) has the ability to support several levels of network integration; therefore allows gradual migration towards total integration as the need arises or the business justifies.

iv) is location technology-independent as far as possible; to permit multi-mode and inter-network support for multiple location technology solutions.

v) incorporates a location technology that can be developed and enhanced into the future.

vi) provides or facilitates additional value-added services; therefore eases the business case for implementation.

Question 4. Characteristics of Preferred Solution

The list of characteristics given to describe BellSouth's preferred solution is by no means definitive. Respondents are invited to:

a) provide their view of the list.

b) comment on each of the characteristics.

c) provide an opinion on any additional ones that may enable clarification or provide completeness.

A straw-man, network-centric solution to wireless location is illustrated by Figure 8.1 below.

This approach may represent a possible Stage 1 implementation of wireless location capability to

the network. It should be noted that this is one of many possible solutions and is not meant to imply a specific implementation. However, many of the characteristics of the straw-man solution are consistent with BellSouth's preferred approach.

Referring to Figure 8.1, the location technology's acquisition station would co-reside with the wireless network's base station transceiver. The location information (initially; latitude, longitude and resolution) would be integrated with the message from the base station to base station controller and passed through to the mobile switch. The mobile switch recognizes the call as 911 and directs the message to a selective PSAP router. The router uses the location information to direct the call to the appropriate PSAP (there may be a number depending on network coverage) and, perhaps, redirect to a secondary PSAP if there is congestion at the primary. Once delivered to the PSAP, the location information (up until this time, only geographic coordinates) is used to determine a landmark-based identification of the emergency site that provides direction to the emergency response team. This "mapping" is derived from the automatic location information database available to the PSAPs.

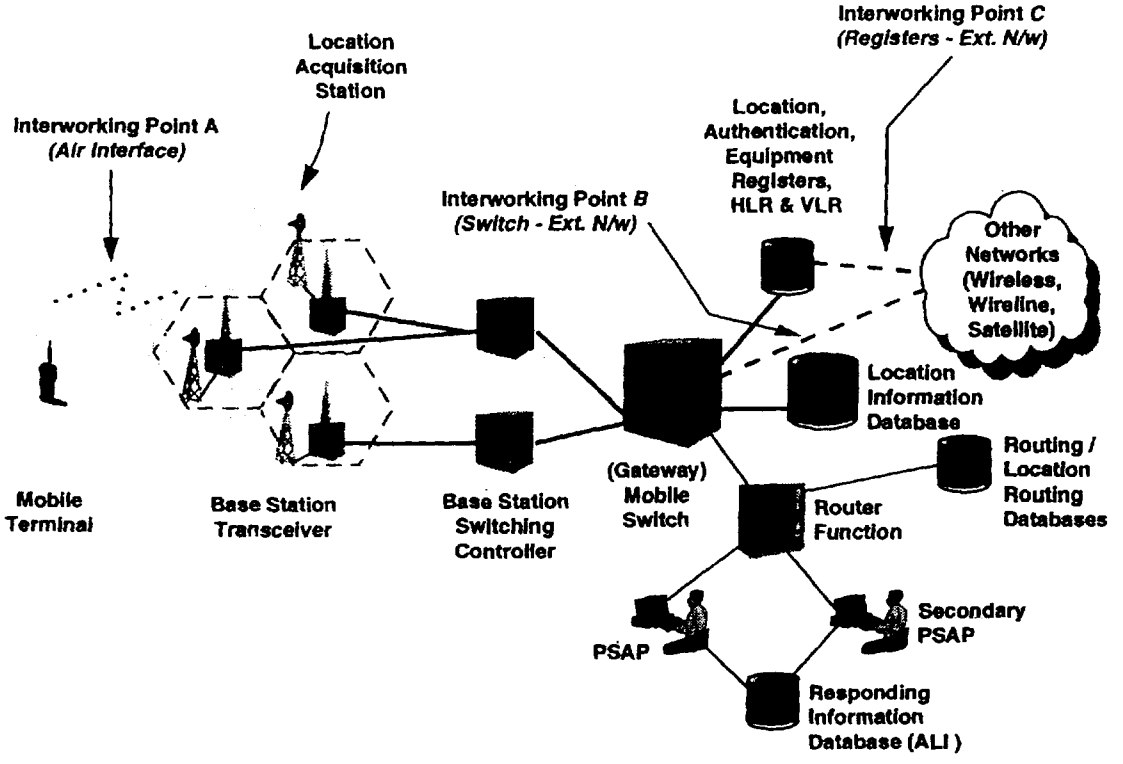

Figure 8.1 A Network-Centric Solution

In this example, the impact on the network has been minimized. There is no change to the subscriber terminal base and the location technology is assumed flexible enough to handle multiple air interfaces. Changes in the message used for setup and the mobile switch's software for routing to the PSAPs are expected. The router function and the routing/location routing databases represent new components of the network (aside from the location acquisition equipment) that may be managed by the wireless service provider.

Question 5. Network Centric Solution

Respondents are asked to give their views on the network centric, straw-man solution as outlined above. Specifically:

a) Is this solution consistent with the PSAP requirements as stated earlier?

b) Is the straw-man consistent with the characteristics outlined for the preferred solution?

c) Does a solution exist that may have less impact on the network? Would you suggest a different solution?

A strawman, mobile subscriber terminal (MST) based wireless location function is illustrated by Figure 8.2 below.

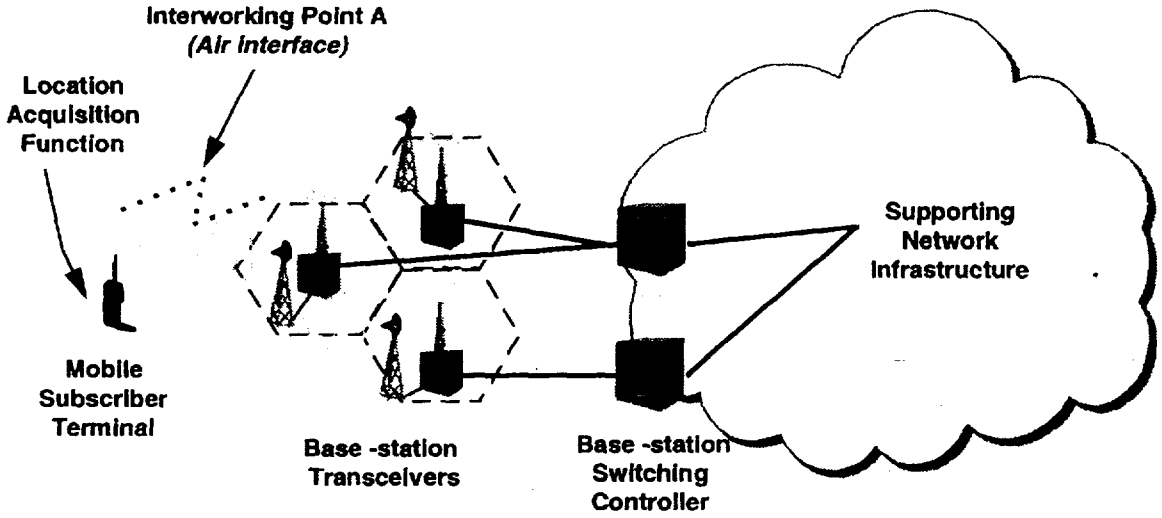

Figure 8.2 A Mobile Subscriber Terminal based Solution

In this example of an MST-based solution the radiolocation function is contained entirely within the terminal. The location information is transparent from the user and is integrated with information from the base-station to the switch controller on to the supporting wireless network infrastructure. The mobile switch recognizes the call as 911 and directs the call to the PSAP router. In much the same way as described in the above network-centric solution. Also, in this example, the air-interface is the only pre-determinant for roaming MST-based solutions; ie. any location technology can be integrated into the MST.

Question 6. Mobile Subscriber Terminal based Solution

Respondents are asked to give their views on this straw-man solution as outlined. Specifically:

a) Is the straw-man consistent with the characteristics outlined for BellSouth's preferred solution?

b) Does a solution exist that may have no impact on the network?

c) What are the advantages and disadvantages of an MST-based solution versus a network-centric one? Please elaborate, quantify or provide supporting information where possible.

d) What architectural changes are required to facilitate an MST-based solution (referencing Figures 8.1 and 8.2)?

8.2.1 Criteria

As stated above, there are several important characteristics that define BellSouth's preferred solution for providing wireless location. From this, there follows a clear set of criteria against which the selection of a location technology solution must be evaluated.

With approximately 30 million cellular subscribers, and growth rates that lead to a doubling of that number plus an anticipated 10 million PCS subscribers by the year 2000, ideally any initial implementation of a network-centric wireless location technology must work with this installed terminal base, if the actual benefit of 911 location capability is to be realized. For an MST-based implementation it is presumed that it can be offered as a product improvement and migrate through the installed base over the normal life-cycle/change-out timeline.

The rapid growth of commercial mobile radio services exists within an environment where the wireless communications technologies are also undergoing considerable development and change. New technologies, such as digital air-interfaces, are beginning to emerge in the marketplace and eventually will become the predominant commercial mobile radio service (CMRS) technologies. New services, such as PCS and improved performance cordless systems, will add to the product mix. Therefore, any location technology deployed, to the greatest extent possible, must be independent of the CMRS technologies that would co-exist.

The initial location technology to be deployed is likely to have a location accuracy which may not offer the ability to guide emergency personnel to the specific emergency site. Therefore, any technology chosen for location purposes must have the capability of improved performance over time (ie. location accuracy improvements over time, of say 500 ft to 40 ft). In other words, the location technology must not preclude this capability.

8.2.2 Network Integration

The requirement to deliver a wireless location technology which is independent of the installed terminal base forces the solution to center around the wireless communications network. The potential impact on the network can be illustrated through four levels of network integration:

- Integration Level 1

  Stand-alone location system (convergence with the wireless infrastructure at the database only). Hence, 0 % impact on the wireless system or may be an AIN function;

- Integration Level 2

  Overlay system that is minimally interlinked with wireless system (infrastructure, etc.) Requires reverse engineering of system interfaces to provide interlinking, shares towers, antennas, etc. Hence, < 20 % impact on the wireless system, possibly with AIN functionality;

- Integration Level 3

Moderate integration of overlay network, enabled by cooperation between infrastructure vendors and location determining technology suppliers. Hence, < 50 % impact on the wireless system;

- Integration Level 4

  Fully integrated with wireless system/networks requiring OEM system components from infrastructure vendors. Hence, up to 100 % impact on the wireless system.

Given the possible impact on network system elements of implementing a location technology, to support wireless emergency 911 services, it can be expected that a plan for gradual phasing-in of the technology would be developed. In order to support this, there will be a requirement for clearly defined points of interaction with the network. At these points, the interfaces will be defined to support the necessary standards essential to enable inter-network operation.

The plan for phasing-in the technology and its improving functionality should provide additional commercial benefits by enabling additional services as well as improved 911 support. This implementation or roll-out plan will also allow distribution of the cost of equipment and additional systems across the network over time. Important to choosing a location technology will be its ability to support incremental improvements without requiring major redundancy of components or throw away of system implementations. Correspondingly, the location technology system should have a clearly defined migration path to eventual full network integration. Once initially deployed, the hardware/software investment made in the location technology should serve as the foundation for eventual network improvements.

Question 7. Subscriber terminal criteria

Respondents are invited to give their views regarding this criteria, and to state any opposing rationale. Specifically, respondents are asked to address the following:

a) What would affect the viability of a first stage implementation limited to operation with the installed subscriber terminal base?

b) Would such an approach be compatible with the PSAP requirements outlined in section 8.1?

c) Under what circumstances would location system performance improvements dictate modification of the subscriber terminal?

d) What impact does an MST-based solution have on the terminal? Specifically, addressing cost, size, weight, battery life / talktime, and user-interface.

e) How will the impact on the MST by incorporating location capability alter the current trends in terminal evolution (lower cost, smaller size, multi-mode (air-interface), multi-frequency, multi-service capability (voice, data, image), etc.)?

f) Give your view of how the location capability can be implemented in the expected lifecycle of terminal product development.

g) Provide your view of how an MST equipped with location capability can be upgraded or enhanced to exploit improving location technology performance and functionality. In particular, how would you address the upgrading of a significant installed base of location-equipped MSTs created during continuous deployment and evolution?

Question 8. Multi-mode criteria

Respondents are invited to give their opinion of this criteria, and to state any opposing rationale. Specifically, respondents are asked to address the following:

a) What location technology would meet the requirements for the existing dual-mode systems of analog and digital technologies in use today, including digital systems employing digital control channels?

b) What combinations of multi-mode standards are likely to be supported in the timeframes of this RFI? Is one location technology suitable for all combinations? If not, which location technologies are likely to support each combination?

c) How viable is an implementation that provides location finding capability independent of the CMRS technology? What are the issues effecting such a capability?

d) In what timeframes would such a location technology exist? What needs to happen in order to facilitate its development, or change the timeframes?

e) What would be the benefits of deploying a CMRS technology-dependent location technology?

f) If CMRS technology-dependent, then which CMRS technology would be required? How would the location technology accommodate "roaming" subscribers?

Question 9. Location Accuracy criteria

Respondents are asked to provide information and commentary on this criteria by addressing the following:

a) What are the fundamental limitations affecting location accuracy with a particular location technology?

b) What are the issues affecting accuracy in a network-centric as opposed to a mobile radio subscriber terminal solution?

c) Which technologies, in your opinion, will best meet the needs of the criteria for improving accuracy over time? What are these projected improvements?

d) What will affect the dynamic availability of 'precise' location information to a PSAP, over the zero to ten seconds timeframe?

e) What other techniques might be used to improve the location information without over-burdening the location technology, such as supplementary or supporting databases, intelligent peripherals, etc.?

Question 10. Evolution and flexibility criteria

Respondents are invited to give their opinion of this criteria, and to state any opposing rationale. Specifically, respondents are asked to address the following:

a) What would be the impact of requiring improving location accuracy and performance? Over what time frames?

b) Which technologies would offer this capability?