INTRODUCTION

In this report, compatibility between Northpoint technology and a variety of satellite systems is examined. In section 1, the technical and operational characteristics of the Northpoint system are identified. With the exception of the discussion on availability, all of the information is taken from sources readily available and in the Public Record. In section 2, it is shown that Northpoint is fully compatible with DBS, and will not cause harmful interference into DBS systems. In section 3, interference from NGSO FSS systems is examined using both static and dynamic methods, and found to be significant from three systems (Hughes Net, Hughes Link and Skybridge). An analysis of interference from Northpoint into NGSO FSS systems is performed in section 4, where it is shown that NGSO FSS systems are compatible with Northpoint, given that coordination is required.

1 OVERVIEW OF NORTHPOINT TECHNOLOGY SYSTEM[1]

The Northpoint Technology is an advanced low-power digital wireless technology to operate in the 12.2 - 12.7 GHz band under allocations to the fixed service (or broadcast service). A broadcast antenna is employed, which would be located on hills, mountains, towers or buildings, and can provide service to a southerly radius of 10-20 kilometers, depending on local conditions. For reception, the typical installation employs a 34 dBi gain antenna (ITU R F.1245). The system is designed to disseminate television, video and entertainment information. It is envisioned (subject to establishing a return link) that the Northpoint Technology could also be used for such high data rate applications such as video conferencing, and Internet connectivity.

1.1 System Characteristics of Northpoint Technology

The transmission parameters are similar to those parameters found in recommendation ITU-R F.755-1, Point-to-Multipoint Systems Used in the Fixed Service. The basic technical parameters are given in Table 1.

Table 1. Technical Parameters of the Northpoint Technology[2]

Parameter	Typical Value	Range	Units
Channel bandwidth	24	.001 - 500	MHz
Frequency	12.5	12.2 - 12.7	GHz
Polarization	H	H/V/C	-
Transmit antenna gain	10	9 - 13	dBi
Transmit Power	-25	-30 to 6	dBW
EIRP	-17.5	-21.5 to -7.5	dBW
Transmit height above average terrain	150	30 - 4500	meters
Transmit height above ground level	150	5 - 500	meters
Transmitter tilt above horizontal	3	0 - 5	deg
Required Signal Strength at edge of cell	-156	-155 to -160	dBi (24 MHz)
Cell Size	16	10 - 20	km

[1] Information about Northpoint system is taken from references 8 and 9.

[2] The parameters in the "Range" column are intended to provide guidance as to the typical range of values used in the majority of installations. The actual values will be determined by local conditions and specific application, (e.g. video, data, etc.). This is not to limit in any way the possibility of other values being used. For example, in cases of transmitters on mountaintops, the transmitter height above the average terrain could be 2000 meters. In this case, the allowable EIRP may be much higher, and the transmitter tilt may be less than zero.

Parameter	Typical Value	Range	Units
Receive antenna gain	34	34 - 38	dBi
Thermal noise floor	-144.1	-144.1	dBW/MHz
Availability objective	99.7	99.7 - 99.995	%

1.1.1 Transmitter Characteristics

The Northpoint Technology employs a transmit antenna with a peak gain of 10 dBi. Transmissions are oriented toward the South, facilitating sharing with geostationary systems. Typical radiation patterns (elevation and azimuth) are given in Figure 1and Figure 2. The typical transmitter tilt is 3 degrees above the horizon, and the typical transmitter height above average terrain (HAAT) is 150 meters.

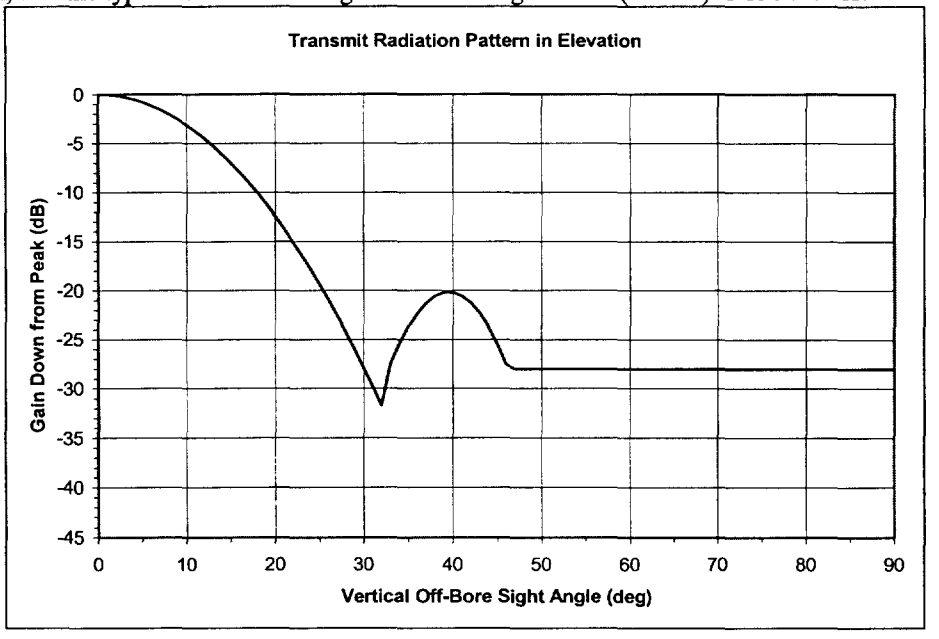

Figure 1. Transmitter Radiation Pattern in Elevation

The equations for computing relative transmit antenna radiation (from Gmax = 10 dBi) in elevation are given in Table 2.

Table 2. Northpoint Transmitter Radiation Pattern in Elevation

Off-Bore Sight Angle	Gain Down from peak (dBi)
$0 \leq \varphi < 32$	$0.031(\varphi)^2$
$32 \leq \varphi < 46.2$	$293.2 + 13.825(\varphi) + 0.175(\varphi)^2$
$46.2 \leq \varphi < 180$	28

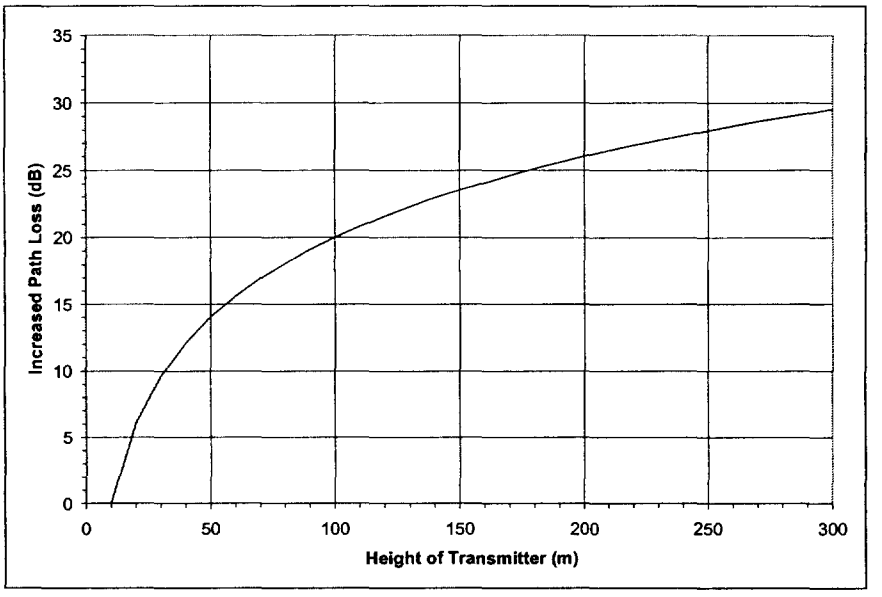

Figure 5. Increased Path Loss over 10 meter Transmitter Height

1.2 Northpoint Link Budget

The baseline Northpoint link budgets are given in Table 3 for both clear air and rain, and for the variation on antenna gain.

Table 3 Northpoint Link Budget

Item	Clear Air	Rain, G = 34 dBi	Rain, G = 38 dBi	Units
Channel Bandwidth	24.0	24.0	24.0	MHz
Frequency	12.5	12.5	12.5	GHz
Availability	99.7%	99.7%	99.7%	%
Transmit Power	-25.0	-25.0	-25.0	dBW
Transmit Power	0.0032	0.0032	0.0032	Watts
Line Losses	-2.5	-2.5	-2.5	dB
Transmit Gain	10.0	10.0	10.0	dBi
EIRP	-17.5	-17.5	-17.5	dBW
Path Length	16.0	16.0	16.0	km
Path Loss	-138.4	-138.4	-138.4	dB
Atmospheric Loss	-0.2	-0.2	-0.2	dB
Rain Loss	0.0	-2.6	-6.6	dB
Isotropic RSS	-156.1	-158.7	-162.7	dBW
Receive Antenna Gain	34.0	34.0	38.0	dBi
Pointing Loss	-0.3	-0.3	-0.3	dB
C Received	-122.4	-125.0	-125.0	dBW
System Temp	284.0	284.0	284.0	°K
System Temp	24.5	24.5	24.5	dB-°K
G/T	9.5	9.5	13.5	dB/K
Boltzmann's	-228.6	-228.6	-228.6	dBW/Hz-K
Noise Figure kTB	-130.3	-130.3	-130.3	dB
Theoretical C/N Received	7.9	5.3	5.3	dB
C/N Required	5.0	5.0	5.0	dB
Theoretical	2.9	0.3	0.3	dB
Interference C/I	20	20	20	dB
Interference Degradation	0.3	0.3	0.3	dB

from the GSO will be less than 0.1 dB, even at the edge of coverage. This level of link degradation will cause less than 0.01% reduction in availability.

Interference due to NGSO FSS— The rain and fade margin of 2.6 dB can also be used to mitigate time varying sources of interference. If NGSO FSS systems meet the interference criteria presented in section 3, then the aggregate interference from NGSO FSS systems will contribute to less than 0.01% of the total unavailability.

Interference due to other terrestrial systems— There is a general paucity of terrestrial systems in the band. Interference from other terrestrial sources of interference is assumed to be at C/I of 30 dB or greater, and thus will not cause a reduction in availability of more than 0.01%.

1.3.3 Reduction in availability due to equipment outages.

Transmit equipment technology is mature, and an equipment availability of 99.99% or higher can be expected.

1.3.4 Northpoint System Availability

The previous sections demonstrated that the Northpoint link budget is designed to provide a minimum 99.7% of availability at edge of coverage, which is the same as DBS. However, all customers within the service area will experience higher availability, and the average availability is higher than 99.95%. Northpoint has the option of providing higher gain antennas to edge-of-service customers in certain parts of the country where additional fade margin may be desired.

1.3.5 Northpoint Service Area.

The Northpoint Service area is shown in Figure 8 for Rain Regions B, D and E. For other parts of the country, the maximum distance may be slightly shorter, but in all cases will be at least 10 km.

necessary, modification of DBS customer equipment will completely eliminate any interference of DBS signals, as explained in the following paragraphs.

Natural Shielding and Terrain Blockage— It is important to note that in any mitigation zone that might exist, attenuation due to terrestrial blockage will also contribute in reducing interference.[21] Importantly, Most DBS antenna installations are placed below the roofline, to the south of the customer dwelling. The antenna manufacturers, as well as DBS receiver manufacturers Sony and RCA, recommend roof-top installations only as a last resort. Attenuation due to terrestrial blockage will also protect a significant percentage of DBS users. If one assumes, conservatively, that only half (50%) of the possible installations in the mitigation zone are below roof top (lack of line of sight), this further reduces the number of affected DBS subscribers in any mitigation zone.

Modification of Customer Equipment— As described in section 2.4, 99.5% of all DBS customers in the service area will automatically have 100% protection from all Northpoint emissions. In the extremely rare case where there is interference, the licensee will bear the burden of preventing interference to the few users affected. Specifically, the licensee will modify, upgrade or otherwise protect any affected DBS customer, at its own expense. The use of these techniques can add sufficient margin to eliminate any interference. The techniques employed in these cases include:

- *Repositioning poorly pointed DBS antennas to eliminate pointing losses.*
- *Replacing the standard DBS antenna with one with better rejection characteristics.*
- *Relocating DBS subscriber receivers away from line-of-sight of the Northpoint transmitter.*
- *Installation of shielding to protect DBS customers.*

2.2.2 Maximum background noise increase from Northpoint Technology.

The interference mitigation techniques employed by Northpoint Technology automatically provide a wide safety margin, as discussed elsewhere in the document. Refer to the figures in Appendix B and the summary in Section 2.4. It can be seen that for 99% of the service area, Northpoint provides a C/I greater than 24 dB, which adds less than 0.1 dB to the noise floor. In some areas of the country, in 0.2% of the service area, a modest increase of 0.3 dB in the thermal noise floor may be seen for those DBS receivers with direct line of sight to the Northpoint transmitter. Again, natural shielding from line-of-sight with the Northpoint transmitter will preclude interference into most DBS installations.

2.3 Northpoint Automatic Level Control

The Northpoint Technology does not believe that automatic level control will be required to reduce the EIRP to avoid interference into DBS customers.

2.4 Comprehensive Review of DBS Sharing with DBS throughout the U.S.

Appendix B provides C/I contours for the entire U.S., covering all rain regions, geographical locations and GSO arc locations. Tables 7-9 summarize the information contained in Appendix B. Table 7 identifies the percent of the service area at C/I less than 24 dB, table 8 shows the percent of the service area at C/I less than 20 dB, and Table 9 lists the minimum C/I values. The analysis shows that in there will be no harmful interference into DBS.

[21] DIRECTV agrees that "Natural shielding will occur and reduce interference levels, but cannot be counted upon" Terrestrial Interference in the DBS Downlink Band. Northpoint agrees and asserts that where natural shielding does not protect DBS consumers Northpoint will employ other mitigation techniques to alleviate interference.

Progress Report

WA2XMY

Northpoint - DBS Compatibility Tests

Washington, D.C.

October, 1999

Carmen Tawil, P.E
Dr. Darrell Word, D.R. Word Associates
Robert Combs, Broadwave USA

three percent (73%) of these measurements were within one mile of a transmitter or repeater, in the area where the Northpoint signal is the strongest (see Appendix I). Other test locations were selected to measure the performance of DBS with multi-cell Northpoint transmissions during Phase III, and to verify performance of Northpoint at various distances. A repeater was installed at the Ft. Lincoln transmit site for Phase III of the test.

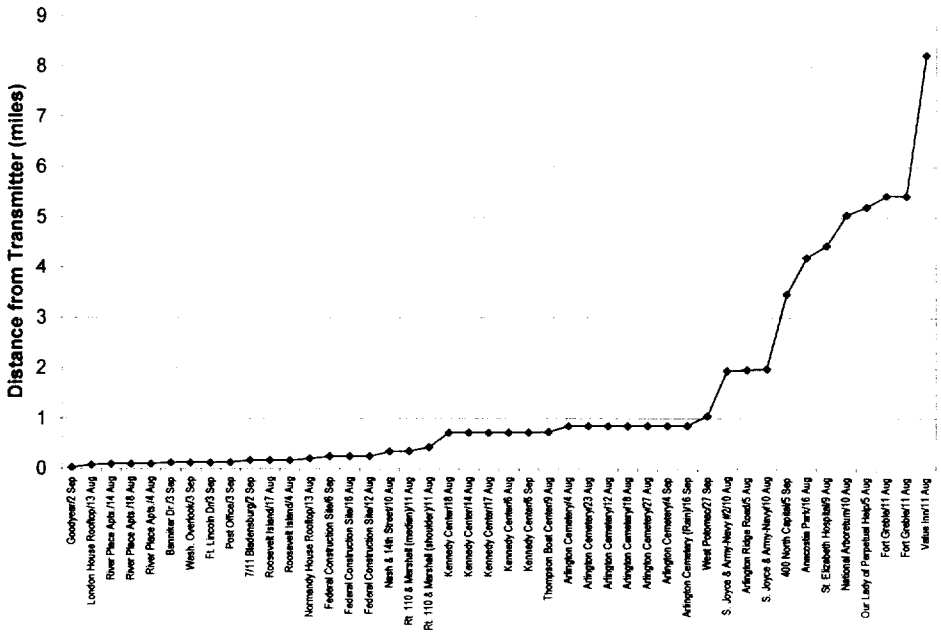

Figure 1. Measurements and Distance from Transmitter

Relation of Test Sites to Predicted C/I Levels

Since one primary test goal was to document the ability of Northpoint to operate co-channel with DBS, an initial step in the test planning was to plot the contours of any areas within the Northpoint service area where the Carrier to Interference ratio (C/I) between DBS and Northpoint was below 6 dB, 10 dB, 15 dB and 20 dB. In previous Northpoint technology experimental work in Kingsville, it was documented that 4.8 dB was the critical C/I ratio in which Northpoint's signal could cause harmful interference to DBS.

In establishing the orientation and location of the Northpoint transmitter, care was taken to minimize the area within these contours. As shown in Appendix I, there is no area around Northpoint's primary transmitter that is within the 6 or 10 dB contour. The tiny area within the 15 dB contour is completely located in the Potomac River. This real world installation shows the ability of a Northpoint engineer to use site specific techniques to minimize and eliminate the potential for interference before the transmitter

is ever placed in service. A portion of the 20 dB contour, which still provides more than 15 dB of margin, falls over land, however, it is important to note that this area is primarily uninhabited and comprises only a tiny fraction (0.3%) of the service area. This installation is typical of the way in which Northpoint installations will be made in the real world.

Notwithstanding the fact that there was little chance of harmful interference within or in the immediate vicinity of the 20 dB contour, this is the area where the Northpoint signal is strongest and therefore most of the testing was concentrated in this area of interest. In this report the areas within or near the 20 dB contour are referred to as the Near In Region.

c. Test Methodology and Procedures

Data was taken in a rigid, scientific manner, and with the use of repetition to verify the results and ensure repeatability. Each measurement consisted of a set-up with the Northpoint transmitter off, establishment of a DBS baseline without the Northpoint signal present, and a data collection phase with the Northpoint transmitter on.

At the start of each test, each of the receive antennae, DBS and Northpoint, was precisely pointed using in-line satellite pointing devices such that all signals were at their highest power. The 34' boom lift was used as necessary to acquire the Northpoint signal.

After the measurement equipment was set-up, the Northpoint transmitter was turned off to establish the DBS normal operational baseline at each site. Two measurements were made of each DBS system -- the set-top box SSP indication and the power density indicated by the spectrum analyzer. Both the spectrum analyzer power level and SSP meter readings were taken over the same period in time.

The Northpoint transmitter was then turned on and maintained at a nominal 12.5 dBm Effective Isotropic Radiated Power (EIRP). With the transmitter on, measurements were repeated of power density and SSP readings. Therefore, data was obtained with the Northpoint transmitter on and off for each DBS satellite visible at each measurement site.

A similar methodology was used for collection of data with the professional (Newtec) demodulator. The Newtec data was collected with Northpoint alternately on and off for 15 - 30 minutes at a time. The Newtec demodulator and data logging provides an accurate record of many important variables for systems using the open DVB standard, such as Echostar. The software records at a specified interval the apparent Eb/No, the received signal level, the bit error rate, the decoder internal temperature, and several other parameters. The Newtec software provides its estimated Eb/No and other values by directly reading these results from the demodulator chipset.

Evaluation and Analysis

of

DBS-Terrestrial Compatibility Testing

at

Oxon Hill, Maryland

Northpoint Technology, Ltd.
July 31, 2000

8.0 Summary and Conclusions

The DBS test was not a *bona fide* test of Northpoint technology. Instead, DBS created inflated power levels in its quest to portray Northpoint technology as harmful. However, even under these extreme conditions, Northpoint was able to successfully field test a low-cost mitigation technique. For all its effort, DBS was unable to demonstrate that any current or future consumer could have been harmed by Northpoint operations. Additionally, the DBS testing methodology is suspect, due to the many discrepancies in the data and predictions.

There are serious discrepancies between the DBS predictions, and the DBS measurement data, which do not agree. The different DBS estimated C/I values at the same location differ by huge amounts, when they should in fact all be the same C/I value, and DBS cannot explain these discrepancies; they cast serious doubt on the merits of the DBS experiment.

This test of planar array technology during DBS operations of terrestrial transmissions proved that a standard low cost planar array antenna could mitigate interference in the peak of a terrestrial mitigation zone, even under extreme conditions of the DBS operations. Specifically, the test showed that the planar array antenna provides over 15 dB of additional isolation over that of the offset feed antenna, concurring with the information provided by the manufacturer. The impact is that when a C/I of 14 dB would be received by an offset feed antenna, the planar array antenna would have a C/I of 29 dB. Thus, this planar array antenna could be successfully used in mitigating unacceptable interference in a wide variety of circumstances.

With regard to DBS operations, it was not in accordance with Northpoint technology operations. The transmit equipment was operated at higher power levels, and at a lower altitude than as specified in the Northpoint conceptual deployment plan. The transmit height was 15 % lower than specified in the conceptual deployment, leading to extremes in power levels that would not be seen in a Northpoint deployment. Moreover, the transmit power level was clearly at least 5-10 dB higher than would be allowed under the proposed EPFD levels. Both of these factors combined to present an interference environment that was extreme, and would not be seen under Northpoint deployment.

Thus, the DBS Experiment does not demonstrate that Northpoint services are incompatible with DBS operations. To the contrary, the DBS Experiment provides further empirical data to support Northpoint's introduction in the 12.2 – 12.7 GHz band by demonstrating that low cost, practical mitigation techniques exist for even the artificial and extreme conditions created by the DBS operators.

Before the
FEDERAL COMMUNICATIONS COMMISSION
Washington, D.C. 20554

In the Matter of	)	
	)	
Amendment of Parts 2 and 25 of the Commission's Rules to Permit Operation of NGSO FSS Systems Co-Frequency with GSO and Terrestrial Systems in the Ku-Band Frequency Range	)	ET Docket No 98-206 RM-9147 RM-9245
	)	
Amendment of the Commission's Rules to Authorize Subsidiary Terrestrial Use of the 12.2-12.7 GHz Band by Direct Broadcast Satellite Licensees and Their Affiliates; and	)	
	)	
Applications of Broadwave USA, PDC Broadband Corporation, and Satellite Receivers, Ltd. to Provide a Fixed Service in the 12.2-12.7 GHz Band	)	

PETITION FOR RECONSIDERATION OF THE SATELLITE BROADCASTING AND COMMUNICATIONS ASSOCIATION

Margaret L. Tobey
Cristina Chou Pauzé
David Munson
Morrison & Foerster, LLP
2000 Pennsylvania Avenue, NW
Suite 5500
Washington, D.C. 20006
(202) 887-1500

Counsel for the Satellite Broadcasting and Communications Association

March 19, 2001

dc-251552

Before the
FEDERAL COMMUNICATIONS COMMISSION
Washington, D.C. 20554

In the Matter of	)	
	)	
Amendment of Parts 2 and 25 of the Commission's Rules to Permit Operation of NGSO FSS Systems Co-Frequency with GSO and Terrestrial Systems in the Ku-Band Frequency Range	)	ET Docket No 98-206 RM-9147 RM-9245
	)	
Amendment of the Commission's Rules to Authorize Subsidiary Terrestrial Use of the 12.2-12.7 GHz Band by Direct Broadcast Satellite Licensees and Their Affiliates; and	)	
	)	
Applications of Broadwave USA, PDC Broadband Corporation, and Satellite Receivers, Ltd. to Provide a Fixed Service in the 12.2-12.7 GHz Band	)	

PETITION FOR RECONSIDERATION OF THE SATELLITE BROADCASTING AND COMMUNICATIONS ASSOCIATION

The Satellite Broadcasting and Communications Association ("SBCA"), by its attorneys and pursuant to Section 1.429 of the Commission's rules, 47 C.F.R. § 1.429, hereby submits this Petition for Reconsideration of the Commission's decision in the *First Report and Order*[1] in the above-captioned proceeding to authorize terrestrial Multichannel Video Distribution and Data Service ("MVDDS") operations in the

[1] *Amendment of Parts 2 and 25 of the Commission's Rules to Permit Operation of NGSO FSS Systems Co-Frequency with GSO and Terrestrial Systems in the Ku-Band Frequency Range*, ET Docket No. 98-206, First Report and Order and Further Notice of Proposed Rulemaking, FCC 00-418 (Dec. 8, 2000) ("*First Report and Order*").

12.2-12.7 MHz band.[2] As demonstrated herein, the Commission's decision to permit MVDDS operations in the 12.2-12.7 GHz band was arbitrary and capricious and must be reversed.

I. INTRODUCTION AND SUMMARY

As SBCA and numerous other commenters have made clear throughout this proceeding and specifically in response to various related petitions filed by Northpoint Technology, Ltd. ("Northpoint"), spectrum sharing between Northpoint's proposed terrestrial operations and DBS operations is not feasible. The Commission itself has periodically addressed the feasibility of terrestrial operations in the 12.2-12.7 GHz and has consistently found that sharing of the 12.2-12.7 GHz band between terrestrial and DBS operations is unworkable. Indeed, the Commission required interfering terrestrial incumbents to relocate from the 12.2-12.7 GHz band in accordance with DBS's primary status and has kept the band free of new terrestrial users ever since. Despite overwhelming record evidence against allowing terrestrial operations in the 12.2-12.7 GHz band, the Commission nonetheless adopted a complete about-face in its spectrum policy by authorizing MVDDS operations in the 12.2-12.7 GHz band. Further, this abrupt decision appears to be based solely upon test data supplied by Northpoint – the one commenting party whose interests in this proceeding are directly in conflict with the interests of the DBS licensees who have priority status in the 12.2-12.7 GHz band.

What is particularly troubling to SBCA is the arbitrary manner in which the Commission has applied the record in this proceeding. Indeed, the primary point of this

[2] As a party to this proceeding and a trade association whose members' interests are adversely affected by the Commission's decision, SBCA has standing to file this petition. 47 C.F.R.
Fn Con'd

Before the
FEDERAL COMMUNICATIONS COMMISSION
Washington, D.C. 20554

In the Matter of	)	
	)	
Amendment of Parts 2 and 25 of the Commission's Rules to Permit Operation of NGSO FSS Systems Co-Frequency with GSO and Terrestrial Systems in the Ku-Band Frequency Range;	)	ET Docket No. 98-206 RM-9147 RM-9245 DA 01-933
	)	
Amendment of the Commission's Rules to Authorize Subsidiary Terrestrial Use of the 12.2-12.7 GHz Band by Direct Broadcast Satellite Licensees and Their Affiliates; and	)	
	)	
Applications of BroadWave USA, PDC Broadband Corporation, and Satellite Receivers, Ltd. to Provide a Fixed Service in the 12.2-12.7 GHz Band	)	

COMMENTS OF DIRECTV, INC. ON THE MITRE REPORT

DIRECTV, Inc.

Gary M. Epstein
James H. Barker
LATHAM & WATKINS
555 Eleventh Street, N.W.
Suite 1000
Washington, D.C. 20004
(202) 637-2200

Counsel for DIRECTV, Inc.

May 15, 2001

interference threat to DBS operation in many realistic operational situations."[12] This finding meshes precisely with the consistently reiterated position of the DBS operators.

In recent weeks, Northpoint has been attempting to distance itself from this key finding of the MITRE Report, claiming publicly that the report "makes clear that only Northpoint demonstrated a system that was able to share effectively with DBS," and that it is something called "generic" MVDDS that MITRE found to be an interference threat, not Northpoint's transmitting equipment.[13] These are demonstrably false assertions and blatant mischaracterizations of MITRE's tests and findings. In fact, it was *Northpoint's* transmitting equipment – and *only* Northpoint's equipment – that was actually tested by MITRE in making its determination that terrestrial operations pose a "significant interference threat." The primary MVDDS interference evaluated during MITRE testing was Northpoint system interference.[14] At a minimum, then, the proposed Northpoint MVDDS system clearly poses a significant interference threat to DBS operations.

---

12 MITRE Report at xvi, 6-1 (emphasis added).

13 *See, e.g*, Press Release, "Northpoint Technology Passes FCC Mandated Independent testing – Only Company to Do So" (released April 24, 2001) ("MITRE concluded significant interference could result from generic terrestrial operations. From the report it was clear that only Northpoint demonstrated a system that was able to share effectively with DBS.") (statement of Sophia Collier); Northpoint *Ex Parte* Letter (April 27, 2001) (annotation at xvi).

14 *See, e.g.*, MITRE Report at § 3.2 (entitled "Testing of DBS Set-Top Boxes in the Presence of *Northpoint MVDDS Interference*") (emphasis added).

US005483663A

United States Patent [19]

Tawil

[11] **Patent Number: 5,483,663**

[45] **Date of Patent: Jan. 9, 1996**

[54] **SYSTEM FOR PROVIDING LOCAL ORIGINATING SIGNALS WITH DIRECT BROADCAST SATELLITE TELEVISION SIGNALS**

[75] Inventor: **Saleem Tawil**, Austin, Tex.

[73] Assignee: **Diversified Communication Engineering, Inc.**, Austin, Tex.

[21] Appl. No.: **222,896**

[22] Filed: **Apr. 5, 1994**

[51] **Int. Cl.**[6] **H04H 1/00**

[52] **U.S. Cl.** **455/3.2**; 348/20; 348/6; 455/180.1

[58] **Field of Search** 455/3.2, 188.1, 455/180.1, 20; 348/470, 21, 6, 12, 13; H04N 7/20

[56] **References Cited**

U.S. PATENT DOCUMENTS

D. 195,261	5/1963	McAuley .	
D. 196,050	8/1963	Finke et al. .	
D. 275,197	8/1984	Feagle .	
D. 304,337	10/1989	Tai .	
D. 305,766	1/1990	Tai .	
D. 306,862	3/1990	Kent .	
2,653,323	10/1945	Bainbridge .	
4,097,708	1/1978	Bickel	219/10.55
4,198,639	4/1980	Killion .	
4,630,108	12/1986	Gomersall	358/84
5,038,151	8/1991	Kaminski .	
5,041,840	8/1991	Cipolla et al. .	
5,115,463	5/1992	Moldavsky et al.	379/58
5,125,109	6/1992	Geller et al.	455/313
5,276,904	1/1994	Mutzig et al.	455/3.2
5,374,938	12/1994	Hatazawa et al.	343/756

FOREIGN PATENT DOCUMENTS

025739	3/1981	European Pat. Off. .	
1221694	7/1961	Germany .	
1953595	10/1969	Germany .	
57-154909	9/1982	Japan .	
4411486	1/1992	Japan	H04N 7/20
2249668	6/1990	United Kingdom .	

Primary Examiner—Victor R. Kostak
Assistant Examiner—Juan Gabriel Acosta
Attorney, Agent, or Firm—Russell D. Culbertson; Shaffer & Culbertson

[57] **ABSTRACT**

An apparatus for providing local programming with direct broadcast satellite transmissions includes a terrestrial transmitter for transmitting converted local channel signals in a first frequency band. The first frequency band is contained within a satellite broadcast frequency band in which the direct broadcast satellite channels are transmitted. The apparatus also includes at each user or subscriber location, a first antenna for receiving the converted local channel signals from the terrestrial transmitter and a second antenna for receiving a direct broadcast satellite channel signals from the satellite. The apparatus further includes a combiner for combining the converted local channel signals and the direct broadcast satellite channel signals on a single propagation path. A signal processor/decoder processes the combined signals on the single propagation path to produce a desired channel output to drive a television set. To the processor/decoder the combined channel signal appears as if it had been all broadcast directly from the satellite. Therefore, the apparatus requires no additional receiver for receiving local programming along with regional and national programming provided by satellite transmission.

21 Claims, 3 Drawing Sheets

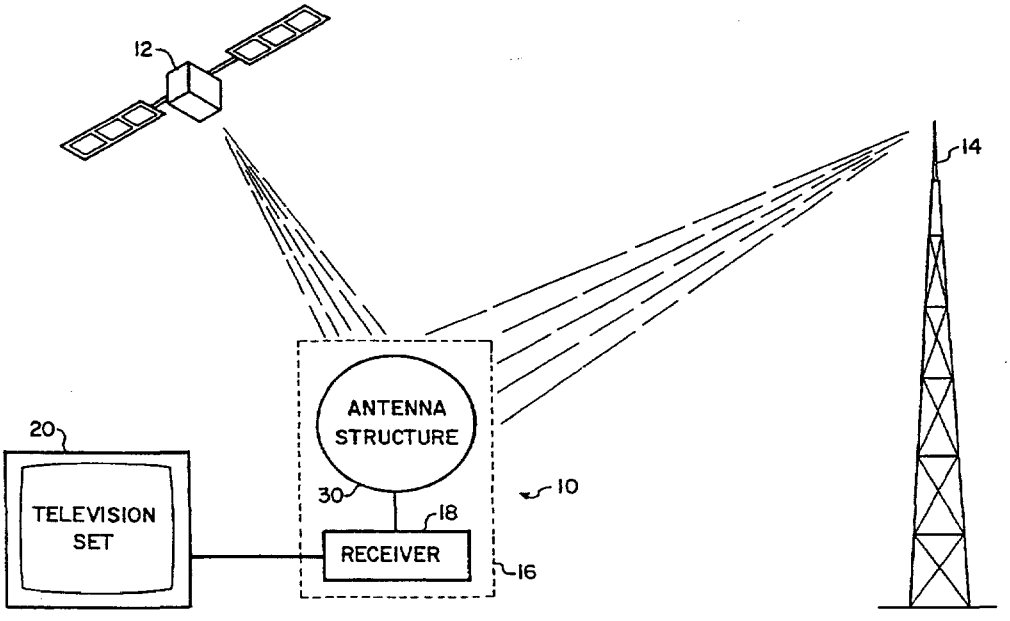

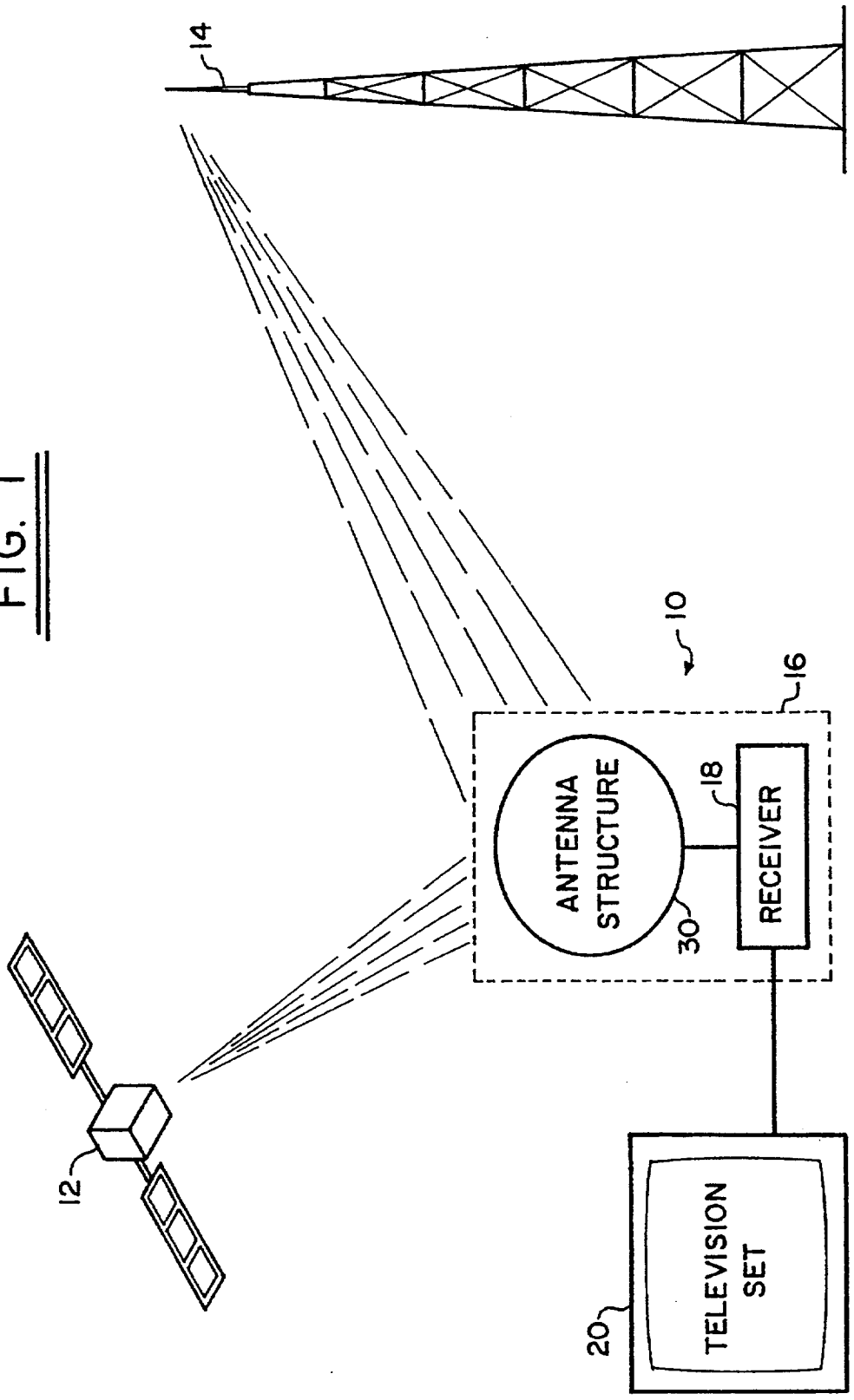
14
10
16
ANTENNA STRUCTURE
18
RECEIVER
30
12
TELEVISION SET
20

FIG. 1

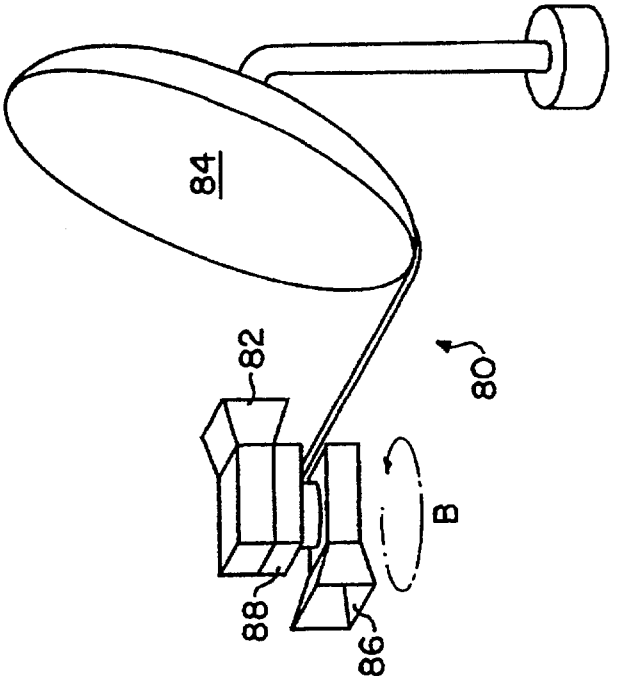

FIG. 5

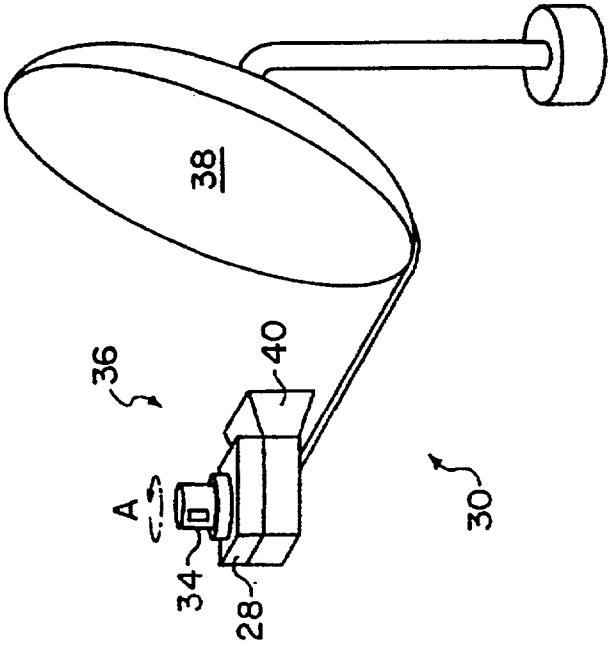

FIG. 2

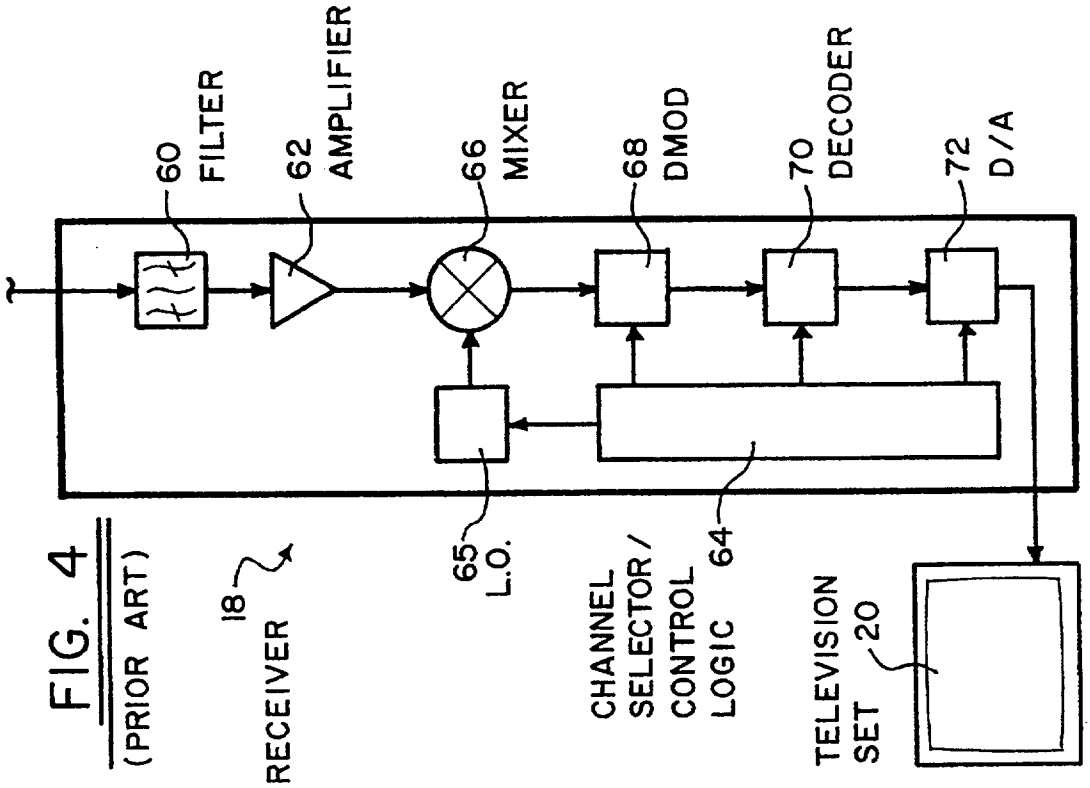

FIG. 4
(PRIOR ART)

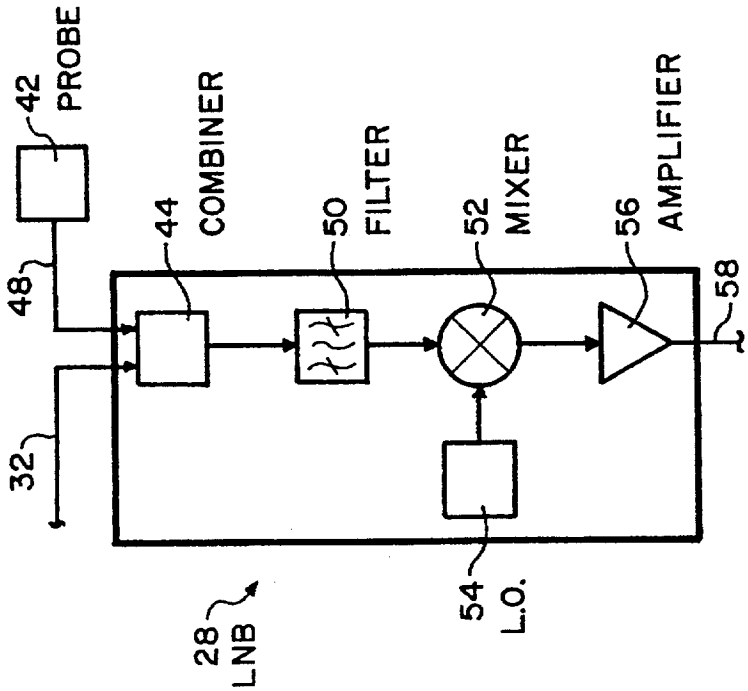

FIG. 3

SYSTEM FOR PROVIDING LOCAL ORIGINATING SIGNALS WITH DIRECT BROADCAST SATELLITE TELEVISION SIGNALS

BACKGROUND OF THE INVENTION

This invention relates to apparatus and methods for broadcasting and receiving television signals. More particularly, this invention relates to an apparatus and method for providing local originating channels along with direct broadcast satellite television channels transmitted from a satellite.

Television signals may be received from a satellite in geosynchronous orbit in which it is stationary with respect to a geographic receiving area. Typically, the television signals are transmitted from a terrestrial transmitter to the satellite and then retransmitted from the satellite so that the signals can be received by terrestrial receivers within the geographic receiving area, that is, within a line of sight of the satellite.

Direct broadcast satellite service ("DBS") refers to satellite transmission of television signals directly for use by individual households or subscribers having the proper signal receiving equipment. The U.S. Federal Communications Commission has dedicated the electromagnetic spectrum from 12.2 Giga-Hertz to 12.7 Giga-Hertz for DBS broadcasting. Sixteen signal carriers are located within the DBS spectrum, each carrier carrying several individual television channels. Depending upon the compression technology applied to these signals, literally hundreds of separate channels may be available through DBS. A great benefit of the DBS system as opposed to prior satellite systems is that only a small dish-type antenna is required to receive the DBS signals and the alignment of the receiving dish is not critical. Also, the DBS system will provide high quality reception at any point in the geographic receiving area of a satellite without the expense of land transmission lines such as those required for cable television.

The DBS system requires that a subscriber purchase or rent both a special DBS signal processing unit or receiver and a DBS satellite signal receiving antenna. The receiver and antenna are usually provided as one assembly having an outdoor unit and an indoor unit. The special DBS receiver receives all sixteen carriers and includes channel selecting logic for selecting a desired program channel from the received carriers. To produce a single channel program output to a television set, the DBS receiver channel selecting logic selects one of the sixteen carriers and then demodulates and decodes the encoded signals. Finally the receiver converts the desired channel signal from digital form to analog form to provide the channel input to the television set.

A major problem with the DBS system involves local originating programming or television channels. Since a single DBS satellite transmits to substantially an entire continent, DBS can effectively only provide national or at most regional programming. There is simply not enough room in the DBS spectrum for all local originating programming to be transmitted through the satellite for selection by individual subscribers. Rather, DBS subscribers must obtain local originating programming from other sources such as local broadcast stations, cable, or local wireless sources. These separate sources all require separate receiving equipment. Furthermore, the advantages of DBS are less attractive to potential subscribers because the subscribers must also use a separate system, cable for example, in order to obtain local programming. In fact, there has been great concern that the absence of local programming with DBS may make the DBS system commercially unviable.

SUMMARY OF THE INVENTION

It is therefore a general object of the invention to overcome the above described problems and limitations associated with DBS systems. Particularly, it is an object of the invention to provide an apparatus and method for providing local originating channels along with direct broadcast satellite television channels transmitted from a satellite.

To accomplish this object, a system according to the invention utilizes a terrestrial transmitter to transmit local programming or local channel signals within the frequency band of the DBS satellite transmissions and digitally encoded in a similar fashion. Part of the DBS broadcasting spectrum may be withdrawn from satellite transmission use and instead dedicated for use with local channel signals transmitted from the terrestrial transmitter. Since the terrestrial transmitter has limited range, the same local channel portion of the DBS spectrum dedicated for use with local channel signals may be reused in different geographical areas without interference. In this fashion, DBS subscribers in the entire DBS range are provided with desired local programming without the need of a separate receiver and without having to subscribe to a separate local service provider.

In addition to the terrestrial transmitter and the DBS satellite transmitter, the apparatus according to the invention includes special receiving equipment at each location subscribing to the DBS system. The receiving equipment includes an antenna structure for receiving signals from both the terrestrial transmitter and the satellite transmitter, combining means for combining the signals received by the two antennas, and the regular DBS receiver or signal processing means.

The terrestrial transmitter, located at a terrestrial transmitting location, transmits local channel signals in a frequency band that is included in the band allotted for satellite broadcasting. Preferably the terrestrial transmitter receives local channel signals broadcast locally by some means and then converts the local channel signals from their broadcast frequencies to converted local channel signals in a first frequency band such that they are compatible with the satellite broadcast signals. The first frequency band is contained within a satellite broadcast frequency band which may be the band that DBS has been allotted. In the DBS system, the satellite broadcast frequency band has an approximate lower frequency limit of 12.2 Giga-Hertz and an approximate upper frequency limit of 12.7 GigaHertz. Although more or less of the DBS spectrum may be used for local channel signals, approximately ten percent (10%) of the satellite broadcast frequency band will preferably be vacated for the converted local channel signals. The converted local channel signals could also be transmitted at higher or lower frequencies adjacent to the DBS frequency spectrum.

The antenna structure according to the invention is located at a user location remote from the terrestrial broadcasting location and includes a first antenna and a second antenna. The first antenna is adapted to receive the converted local channel signals in the first frequency band. The second antenna is adapted for receiving direct broadcast satellite television channel signals that are transmitted by the satellite in the satellite broadcast frequency band. Preferably, the first