and second antennas are located on a single structure and are separately alignable for peak reception. However, the first and second antennas could also be separate if required for peak reception. Any antennas suitable for receiving the respective frequency signals may be used in the antenna structure according to the invention.

The combining means is also located at the user location and operates to combine the converted local channel signals received by the first antenna and the direct broadcast satellite television signals received by the second antenna. The combining means combines the two sets of signals to form a combined television signal travelling on a single propagation path. Since the individual signals are each within the satellite broadcast frequency band, the combined television signal is also in the satellite broadcast frequency band and may be processed for use as if it were from a single source. When applied to the DBS system for example, the combined signal may be processed by a single DBS receiver without the need for additional or alternative equipment.

The signal processing means or receiver receives the combined television signal from the combining means and processes the combined signal to produce a desired channel output signal to a television set. In the DBS system for example, the signal processing receiver is implemented in a single piece of equipment and includes bandpass filters for filtering the incoming signal and an amplifier. The receiver also includes a mixer, demodulator, digital decoder, and a digital to analog converter all controlled by channel selector/control logic.

The present invention in combination with the DBS system provides a superior alternative to cable television systems. The subscriber not only obtains the high quality reception available with DBS but also obtains local programming without having to subscribe to a separate service or obtain additional receiving equipment.

These and other objects, advantages, and features of the invention will be apparent from the following description of the preferred embodiments, considered along with the accompanying drawings.

BRIEF DESCRIPTION OF THE DRAWINGS

FIG. 1 is a diagrammatic view of a transmitting and receiving apparatus embodying the principles of the present invention.

FIG. 2 is an isometric drawing of an antenna structure embodying the principles of the invention.

FIG. 3 is a diagrammatic representation showing a signal combiner according to the invention.

FIG. 4 is a diagrammatic representation showing a receiver and receiver output according to the invention.

FIG. 5 is an isometric drawing of an alternate antenna structure embodying the principles of the invention.

DESCRIPTION OF THE PREFERRED EMBODIMENT

FIGS. 1–4 illustrate one preferred apparatus **10** for providing local programming or channels along with direct broadcast satellite television channels according to the invention. The apparatus **10**, as shown FIG. **1**, is adapted to be used with a satellite transmitter **12** broadcasting direct broadcast satellite television signals in a satellite broadcast frequency band. The apparatus **10** includes a terrestrial transmitter **14** and a signal receiving arrangement **16** located at a location remote from the terrestrial transmitter. Each individual user or subscriber of the service would have a signal receiving arrangement. The terrestrial transmitter **14** transmits in a frequency band within the satellite frequency band and the receiving arrangement **16** receives the satellite signals and the terrestrial signals and combines them for processing by a single receiver **18**. The disclosed system **10** provides DBS along with local programming while requiring no additional receiving equipment other than a special antenna structure described below and means for combining the separate direct broadcast satellite television channel signals and local channel signals.

The DBS satellite **12**, as is well known in the field, includes a transmitter (not shown) and is located in a geosynchronous orbit so that it remains stationary with respect to a certain geographic broadcast area. The satellite **12** itself receives signals from a land-based transmitter (not shown) and then retransmits those signals back to earth. The position of the satellite transmitter **12** allows it to provide a clear signal to a large geographic area. The satellite transmits in a satellite broadcast frequency band. For example, the FCC has allocated the electromagnetic spectrum band from 12.2 Giga-Hertz to 12.7 Giga-Hertz for DBS broadcasting and this frequency band represents the preferred satellite broadcast frequency band. However, the satellite broadcast frequency band for purposes of this invention could also be defined as a frequency band in which the single receiver is adapted to operate. For example, the satellite frequency band could be defined to encompass a frequency band adjacent to the DBS band as well as the allocated DBS band with the terrestrial signal being transmitted in this adjacent band. In this fashion, the invention could be adapted to operate over any desired frequency band.

The terrestrial transmitter **14** comprises any suitable transmitting device for transmitting local channel signals in a first frequency band that is contained within the satellite frequency band. The terrestrial transmitter **14** provides local programming with the local channel signals. Preferably, the terrestrial transmitter **14** will have associated with it means for receiving local programming and signal converting means (not shown) for converting the received local signals into converted local channel signals in the first frequency band. The receiver for the terrestrial transmitter and the signal converter are known in the art and are not described further herein. In a preferred embodiment of the invention operable for DBS systems, the local signals are converted from analog to digital signals before they are transmitted so that the DBS receiver **18** may decode the terrestrially transmitted signals similarly to the satellite transmitted signals.

The terrestrial transmitter **14** has limited range depending upon its broadcast power. For example, depending upon the terrain surrounding the terrestrial transmitter **14**, a 100 Watt transmitter can provide a suitable signal for approximately a ten-mile radius around the transmitter. The broadcast power for the terrestrial transmitter is chosen to provide the desired local coverage. Also, since the terrestrial transmitters each have a limited range, the invention encompasses many separate terrestrial transmitters at different geographical locations around the satellite broadcast area for providing the converted local channel signals in just their respective local areas. Since the broadcasting range is limited geographically, each terrestrial transmitter **14** may broadcast in the same first frequency band without providing conflicting signals to any subscriber. Further, in high population density areas when many local channels operate, such as New York City and Los Angeles, for example, the first frequency spectrum could be subdivided to allow portions of the first

frequency spectrum to be reused more frequently than other portions of the spectrum. In this fashion, some local channels could be broadcast over a larger area while other local channels could be broadcast over smaller area, depending upon local demand for the channels.

The receiving arrangement **16** is located at a remote location from the location of the terrestrial transmitter **14**, such as at an individual household within the range of the terrestrial transmitter. The receiving arrangement **16** includes an antenna structure **30** and the receiver **18**, and provides a standard television signal to drive a user or subscriber's television set. The receiving arrangement **16** is adapted to receive the direct broadcast satellite channel signals containing regional or national programming and also the converted local channel signals containing local programming.

Referring to FIG. **2**, the antenna structure **30** includes a first antenna **34** for receiving converted local channel signals and a second antenna **36** for receiving direct broadcast satellite signals. The antenna structure **30** also preferably includes a low noise block converter ("LNB") **28** for conditioning the signals from both antennas as described more particularly with reference to FIG. **3**. The second antenna **36**, as shown in FIG. **2**, preferably comprises a standard satellite signal receiving antenna with a reflector dish **38** and a feed-horn assembly **40**. The reflector dish **38** reflects and concentrates signals to the feed-horn assembly **40** and these signals are picked up by an antenna probe **42** (FIG. **3**) associated with the feed-horn assembly. The first antenna **34** (shown in FIG. **2**) preferably comprises a monopole slot antenna. The slot antenna feeds its signal to the LNB **28** through any suitable connection such as a low loss copper coaxial cable **32** (FIG. **3**) directly connected to the LNB. Also, the illustrated slot antenna is rotatably mounted on the satellite antenna feed-horn assembly so that it may rotate about its longitudinal axis as shown at arrow A to best position its slot, or slots if more than one is used, for receiving convened local channel signals from the local terrestrial transmitter **14**.

Those skilled in the art will readily appreciate that the size of the LNB **28**, feed-horn **40** and slot antennal is exaggerated in FIG. **2** relative to the reflector dish for purposes of illustration. In actuality, the reflector dish may be about 18 inches in diameter, the feed-horn **40** wave guide is rectangular approximately one inch wide and one-half inch high, the LNB is rectangular one-half inch high and two and one-half inches long, and the slot antenna for a low gain unit is approximately one inch high and one-half inch in diameter with the slot being about half an inch long.

Referring to FIG. **3**, the preferred LNB **28** includes integrally formed combining means **44** for combining the local channel signals and the direct broadcast satellite channel signals on a single propagation path. The combining means **44** in this preferred form of the invention comprises a stripline combiner connected to receive signals from the transmission line **32** connected to the first antenna **34** and the transmission line **48** connected to the probe **42**. The stripline combiner **44**, such as that shown diagrammatically in FIG. **3**, is well known in the art and includes a conductor having dimensions dictated by the frequencies of signals which it carries. Both the transmission line **32** from the slot antenna **34** and the transmission line **48** from the probe **42** may comprise coaxial cable cut to an appropriate length. In a particular embodiment, the length of the coaxial cable may be dictated by the respective impedances of the slot antenna **34** and the probe **42** so that impedances at the combiner are properly matched.

Although the stripline combiner **44** is shown in FIG. **3** as the preferred form of the invention, any suitable combining means may be used within the scope of the invention. For example, a directional coupler (not shown) may be used to couple the signals from the slot antenna **34** onto a transmission line carrying signals from the satellite antenna. Also, the LNB **28** may be integrally formed with the feed-horn antenna probe **42** and the propagation path from the antenna probe to the stripline combiner **44**.

The illustrated preferred LNB **28** also preferably includes a band pass filter **50**, a mixer **52** controlled by a local oscillator **54**, and an amplifier **56**. The LNB **28** functions to filter the combined signals and to translate the combined signals into an intermediate frequency band. The LNB **28** also functions to amplify the signals for transmission by suitable transmission line **58** to the DBS broadcast receiver/decoder **18** for further processing.

FIG. **4** illustrates a DBS receiver/decoder **18** as employed according to the invention. The receiver **18** includes a band pass filter **60** and an additional amplifier **62**. A channel selector/controller **64** controls a local oscillator **65** which in turn controls a mixer **66** connected in series with the signal path. A demodulator **68**, a digital decoder **70**, and a digital to analog converter **72** complete the circuitry required to decode the signal. Once fully decoded, the analog output from the receiver **18** represents an NTSC-television signal which can be received by the television set **20**. The illustrated DBS receiver/decoder **18** operates under the control of the channel selector controller **64**. In operation, a subscriber inputs a desired channel setting either manually or by hand-held remote (not shown) on the selector/controller **64** which causes the mixer **66** to select the desired carrier signal from the several carrier signals reaching the receiver/decoder **18**. The demodulator **68** then produces a stream of digital signals from this single carrier which is then decoded by the decoder **70** to produce a digital signal for a desired channel. The digital to analog converter **72** converts this digital signal to the analog signal necessary to drive the television set **20**.

FIG. **5** shows an alternative antenna structure **80** embodying the principles of the invention. In this form of the invention, the antenna structure **80** includes two separate feed-horns, a satellite feed-horn **82** for receiving reflected signals from the satellite dish **84** and a terrestrial feed-horn **86** for receiving signals directly from the terrestrial transmitter **14** (FIG. **1**). Both feed-horns **82** and **86** are preferably connected to a single LNB **88** which may have two integrally formed probes (not shown), each probe extending into one of the feed-horn wave guides. The terrestrial feed-horn **86** preferably is pivotally connected to the LNB **88** and satellite feed-horn **82** so that it may be rotated as shown at arrow B for alignment with its receiving end best positioned for receiving signals from the local terrestrial transmitter **14**.

Those skilled in the art will readily appreciate that there are a number of antenna types that may be employed as the first and second antennas according to the invention. For example, a circular wave guide could be used as the antenna for receiving the local channel signals from the terrestrial transmitter **14** and another circular wave guide could be used in place of the feed-horn in the dish-type satellite antenna. Alternatively two "patch" or flat plate antennas could also be used for both receiving the satellite channel signals and the local channel signals. Even a single flat plate antenna could be used for receiving the satellite signals and the local terrestrially transmitted signals if the flat plate were mounted so that its orientation could be changed to receive the desired signal. In this single flat plate antenna form of the invention

an antenna such as that disclosed in U.S. Pat. Nos. 4,761,654 or 5,005,019 with an integrally formed LNB would be mounted so that it could pivot upwardly in position to receive signals from the satellite and downwardly until it extends generally vertically to receive the terrestrially transmitted signals. Additionally the flat plate would be capable of pivoting about its base to face the best direction for receiving the desired signals. This single movable antenna structure is equivalent to the first and second antennas set out in the following claims.

The operation in the invention and the method for providing local channel signals with direct broadcast satellite signals may now be described with reference to FIGS. **1–5**. Referring particularly to FIG. **1**, the method includes transmitting converted local signals from the terrestrial transmitter **14** at a terrestrial transmitter location. The converted local channel signals are in a first frequency band that itself is within a satellite frequency band in which signals are transmitted from a direct broadcast satellite **12**. The method also includes receiving both the converted local channel signals and the direct broadcast satellite channel signals at a user location remote from the terrestrial transmitter **14**. The method continues with the step of combining the local channel signals and the direct broadcast satellite channel signals on a single propagation path for the final step of processing in the receiver **18** to produce the desired television channel signal.

In a practical application of the invention, the terrestrial transmitter **14** would preferably be operated by a local service provider that does not itself provide programming. The operator of the terrestrial transmitter would then obtain local programming from local broadcasters. In this preferred form of the invention the method also includes receiving the local channel signals in their regular or initial broadcast frequency and translating the local channel signals into converted local channel signals in the first frequency band. The conversion process would include converting the local channel signals from an analog to a digital form that is acceptable to the DBS receiver. The step of transmitting the local channel signals would then comprise retransmitting the converted local signals to direct broadcast system subscribers.

The method of combining the local channel signals and direct broadcast satellite channel signals may be performed with any suitable combiner. For example, the combiner may be a stripline combiner **44** as shown in FIG. **3** or a directional coupler as described above. In any event, the output is the combined signal which appears to the DBS receiver just as it would have appeared had the signal actually been broadcast from the satellite. Thus, the invention provides the advantage that no additional receiver is required to receive local channel signals and the local programming is seamlessly combined with the regional or national satellite programming.

The above described preferred embodiments are intended to illustrate the principles of the invention, but not to limit the scope of the invention. Various other embodiments and modifications to these preferred embodiments may be made by those skilled in the art without departing from the scope of the following claims.

I claim:

1. An apparatus for simultaneously providing local originating channels along with direct broadcast satellite television channels transmitted from a satellite, the apparatus comprising:

(a) a terrestrial transmitter located at a terrestrial broadcasting location for transmitting converted local channel signals in a first frequency band, the first frequency band contained within a satellite broadcast frequency band;

(b) a first antenna located at a user location remote from the terrestrial broadcasting location for receiving from the terrestrial transmitter the converted local channel signals in the first frequency band;

(c) a second antenna at the user location for receiving from the satellite direct broadcast satellite television channel signals in the satellite broadcast frequency band;

(d) combining means at the user location for combining the converted local channel signals received by the first antenna and the direct broadcast satellite television signals received by the second antenna to form combined television signals in the satellite broadcast frequency band on a single signal path; and

(e) signal processing means at the user location for receiving the combined television signals from the combining means and processing the combined television signals to produce a desired channel output signal.

2. The apparatus of claim **1** further comprising:

(a) a terrestrial receiver located at the terrestrial broadcasting location for receiving local channel signals; and

(b) a signal converter located at the terrestrial broadcasting location for converting the local channel signals to converted local channel signals in the first frequency band.

3. The apparatus of claim **1** wherein the first antenna is selected from the group consisting of circular waveguide antennas, feed-horn antennas, flat plate antennas, slot antennas, dipole antennas, and multi-dipole antennas.

4. The apparatus of claim **1** wherein the second antenna comprises:

(a) at least one reflector for reflecting and concentrating the direct broadcast satellite television channel signals;

(b) a signal collector for collecting the direct broadcast satellite television channel signals concentrated by the reflector; and

(c) an antenna probe extending into the signal collector for receiving the direct broadcast satellite television channel signals.

5. The apparatus of claim **4** wherein the signal collector is selected from the group consisting of feed-horn assemblies and circular wave guides.

6. The apparatus of claim **1** wherein the second antenna is a flat plate antenna.

7. The apparatus of claim **1** wherein the satellite broadcast frequency band has an approximate lower frequency limit of 12.2 Giga-Hertz and an approximate upper frequency limit of 12.7 Giga-Hertz.

8. The apparatus of claim **1** wherein the combining means comprises a stripline combiner mounted on a low noise block converter, the stripline combiner including:

(a) a first input connected to receive converted local channel signals from the first antenna;

(b) a second input connected to receive direct broadcast satellite television channel signals from the second antenna; and

(c) an output connected to deliver the combined television signals to signal processing elements of the low noise block converter.

9. An apparatus for simultaneously receiving signals from both a satellite source and a terrestrial source, the apparatus comprising:

(a) a first antenna for receiving from a terrestrial transmitter converted local channel signals in a first frequency band, the first frequency band contained within

a satellite broadcast frequency band;

(b) a second antenna for receiving from the satellite source direct broadcast satellite television channel signals in the satellite broadcast frequency band; and

(c) combining means for combining the converted local channel signals received by the first antenna and the direct broadcast satellite television channel signals received by the second antenna to form combined television channel signals in the satellite broadcast frequency band on a single signal path.

10. The apparatus of claim **9** wherein the first antenna is selected from the group consisting of circular waveguide antennas, feed-horn antennas, flat plate antennas, slot antennas, dipole antennas, and multi-dipole antennas.

11. The apparatus of claim **9** wherein the second antenna comprises:

(a) at least one reflector for reflecting and concentrating the direct broadcast satellite television channel signals;

(b) a signal collector for collecting the direct broadcast satellite television channel signals concentrated by the reflector; and

(c) an antenna probe extending into the signal collector for receiving the satellite television channel signals.

12. The apparatus of claim **11** wherein the signal collector is selected from the group consisting of feed-horn assemblies and circular wave guides.

13. The apparatus of claim **9** wherein the second antenna is a flat plate antenna.

14. The apparatus of claim **9** wherein the satellite broadcast frequency band has an approximate lower frequency limit of 12.2 Giga-Hertz and an approximate upper frequency limit of 12.7 Giga-Hertz.

15. The apparatus of claim **9** wherein the combining means comprises a stripline combiner mounted on a low noise block converter, the stripline combiner including:

(a) a first input connected to receive converted local channel signals from the first antenna;

(b) a second input connected to receive direct broadcast satellite television channel signals from the second antenna; and

(c) an output connected to deliver the combined television channel signals to signal processing elements of the low noise block converter.

16. In a system for providing direct broadcast satellite television channels having a satellite transmitter for transmitting direct broadcast satellite television channel signals in a satellite broadcast frequency band, a satellite signal antenna for receiving direct broadcast satellite television channel signals at a user location, and signal processing means at the user location for receiving the direct broadcast satellite television channel signals and processing the signals to produce a desired channel output, the improvement comprising:

(a) a terrestrial transmitter for transmitting converted local channel signals in a first frequency band, the first frequency band contained within the satellite broadcast frequency band;

(b) a first antenna at the user location for receiving from the terrestrial transmitter the converted local channel signals in the first frequency band; and

(c) combining means at the user location for combining the converted local channel signals received by the first antenna and the direct broadcast satellite television signals received by the second antenna to form combined television signals in the satellite broadcast frequency band on a single signal path for processing by the signal processing means.

17. The system of claim **16** wherein the combining means comprises a stripline combiner mounted on a low noise block converter, the stripline combiner including:

(a) a first input connected to receive converted local channel signals from the first antenna;

(b) a second input connected to receive direct broadcast satellite television channel signals from the second antenna; and

(c) an output connected to deliver the combined television signals to signal processing elements of the low noise block converter.

18. A method for providing local originating channels along with direct broadcast satellite television channels transmitted from a satellite, the method comprising the steps of:

(a) transmitting converted local channel signals in a first frequency band from a terrestrial transmitter location, the first frequency band contained within a satellite broadcast frequency band;

(b) at a user location remote from the terrestrial transmitter location, receiving the converted local channel signals in the first frequency band;

(c) receiving at the user location direct broadcast satellite television channel signals in the satellite broadcast frequency band, the direct broadcast satellite television channel signals being transmitted from the satellite;

(d) combining the converted local channel signals and the direct broadcast satellite television signals to form combined television signals in the satellite broadcast frequency band on a single signal path; and

(e) processing the combined signals to produce a desired channel output signal.

19. The method of claim **18** further comprising the steps of:

(a) receiving at the terrestrial transmitter location local channel signals; and

(b) converting the local channel signals to converted local channel signals in the first frequency band.

20. The method of claim **18** wherein the step of combining the converted local channel signals and the direct broadcast satellite television signals to form the combined television signal is performed with a stripline combiner mounted on a low noise block converter and further including the step of:

(a) directing the combined television signals to signal processing elements of the low noise block converter.

21. An apparatus for simultaneously providing local originating channels, along with direct broadcast satellite television channels transmitted from a satellite, the apparatus comprising:

(a) a terrestrial transmitter located at a terrestrial broadcasting location for transmitting converted local channel signals in a first frequency band, the first frequency band contained within a satellite broadcast frequency band;

(b) an antenna located at a user location remote from the terrestrial broadcasting location for receiving from the terrestrial transmitter the converted local channel signals in the first frequency band when the antenna is oriented in a first position and for receiving from the

satellite direct broadcast satellite television channel signals in the satellite broadcast frequency band when oriented in a second position;

(c) antenna orienting means connected to the antenna for enabling the antenna to move between the first position and the second position; and

(d) signal processing means at the user location for receiving television signals from the antenna and processing the television signals to produce a desired channel output signal.

* * * * *

US005761605A

United States Patent [19]

Tawil et al.

[11] Patent Number: 5,761,605

[45] Date of Patent: Jun. 2, 1998

[54] **APPARATUS AND METHOD FOR REUSING SATELLITE BROADCAST SPECTRUM FOR TERRESTRIALLY BROADCAST SIGNALS**

[75] Inventors: **Carmen Tawil**; **Saleem Tawil**, both of Austin, Tex.

[73] Assignee: **Northpoint Technology, Ltd.**, Austin, Tex.

[21] Appl. No.: **731,244**

[22] Filed: **Oct. 11, 1996**

[51] **Int. Cl.**[6] **H04H 1/00**; H04B 7/185

[52] **U.S. Cl.** **455/3.2**; 455/13.3

[58] **Field of Search** 455/3.2, 427, 430, 455/12.1, 13.3, 63, 272, 188.1, 179.1; 348/6, 12, 13

[56] **References Cited**

U.S. PATENT DOCUMENTS

D. 195,261	5/1963	McAuley .	
D. 275,197	8/1984	Feagle	D14/86
D. 304,337	10/1989	Tai	D14/235
D. 305,766	1/1990	Tai	D14/231
D. 306,862	3/1990	Kent	D14/230
2,653,238	9/1953	Bainbridge	250/33.57
4,097,708	6/1978	Bickel	219/10.55
4,198,639	4/1980	Killion	343/727
4,630,108	12/1986	Gomersall	358/84
5,038,151	8/1991	Kaminski	343/727
5,041,840	8/1991	Cipolla et al.	343/725
5,115,463	5/1992	Moldavsky	379/58
5,125,109	6/1992	Geller	455/313
5,276,904	1/1994	Mutzig et al.	455/3.2
5,374,938	12/1994	Hatazawa	343/756
5,483,663	1/1996	Tawil	455/3.2

FOREIGN PATENT DOCUMENTS

70025739	8/1980	European Pat. Off. .	
1221694	7/1961	Germany .	
1953595	10/1969	Germany .	
57-154909	9/1982	Japan .	
411486	1/1992	Japan	H04N 7/20
2249668	5/1992	United Kingdom .	

Primary Examiner—Nguyen Vo

Attorney, Agent, or Firm—Shaffer & Culbertson; Russell D. Culbertson

[57] **ABSTRACT**

A first antenna (16) at a user location (14) receives signals at a first frequency where the signals are travelling only within a first directional reception range as measured from a centerline (28) of the first antenna (16). The first antenna (16) has its centerline (28) aligned to receive direct broadcast satellite signals transmitted from a satellite in geosynchronous orbit about the earth. A second antenna (18) at the user location (14) receives signals at the first frequency where the signals are travelling only within a second directional reception range as measured from a centerline (30) of the second antenna (18). The second antenna (18) is aligned to receive signals transmitted at the first frequency from a terrestrial transmitting location remote from the user location. A terrestrial transmitter transmits signals at the first frequency and directionally within a terrestrial azimuth range from the terrestrial transmitting location. The terrestrial transmitting location is located with respect to the user location (14) such that the terrestrial transmitter (20) transmits in directions only outside of the directional reception range of the first antenna (16). The satellite (12) is positioned with respect to the user location (14) such that the satellite transmits directional in directions outside of the directional reception range of the second antenna (18).

12 Claims, 2 Drawing Sheets

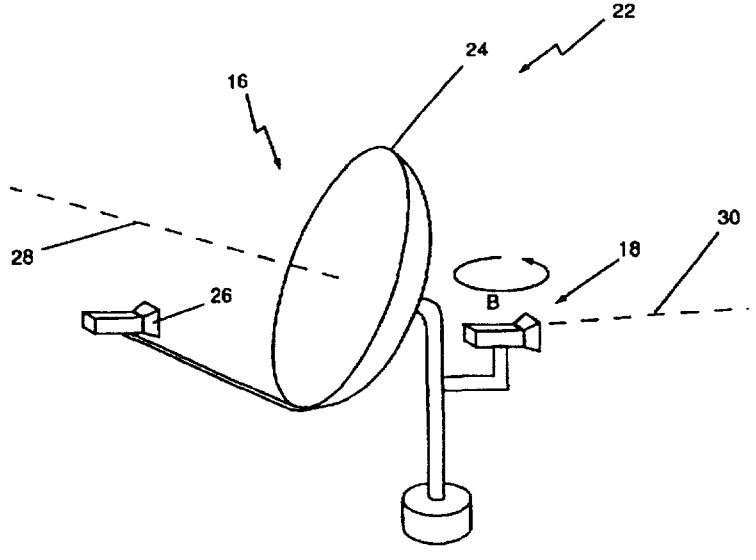

Figure 1

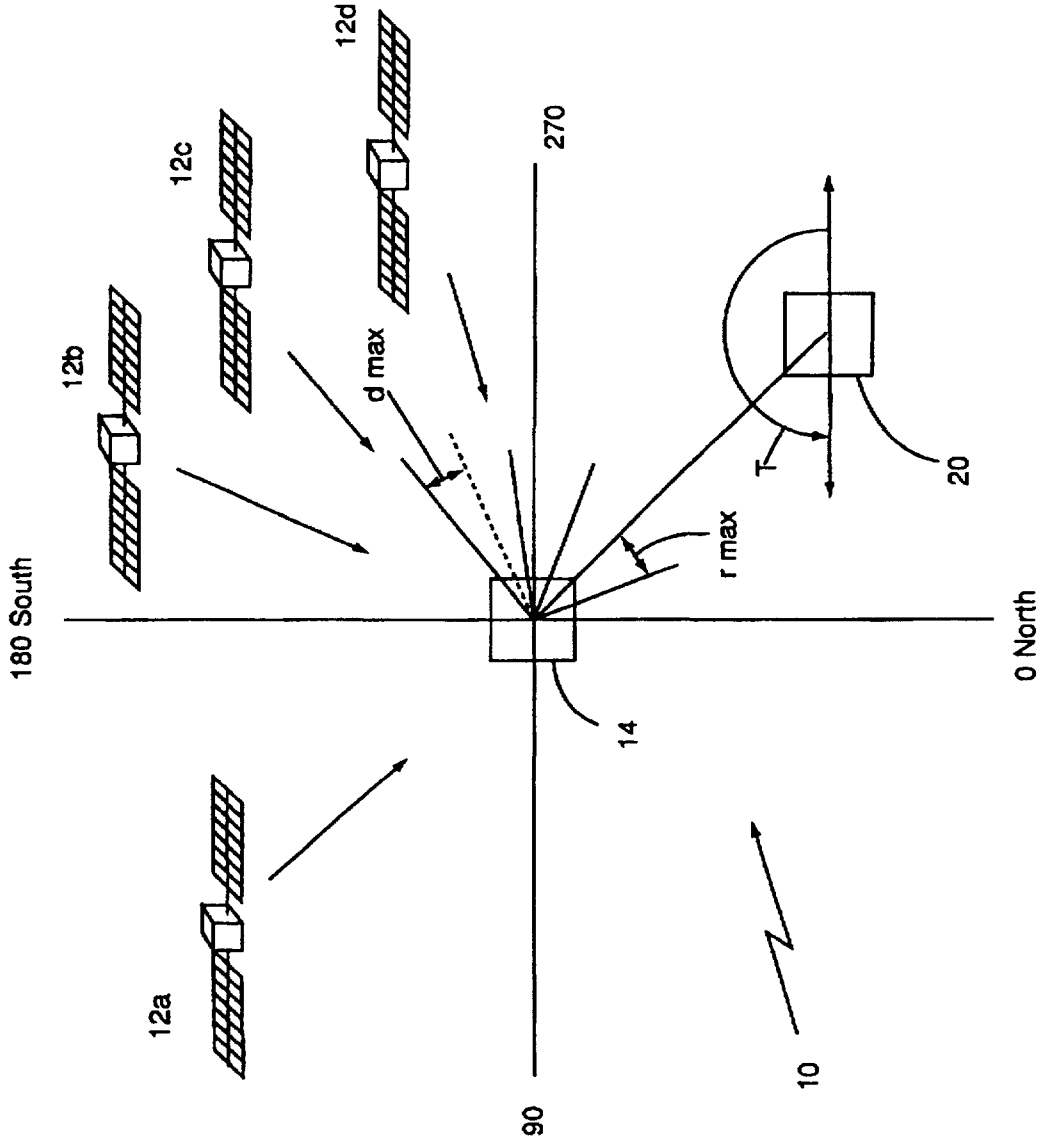

Figure 2

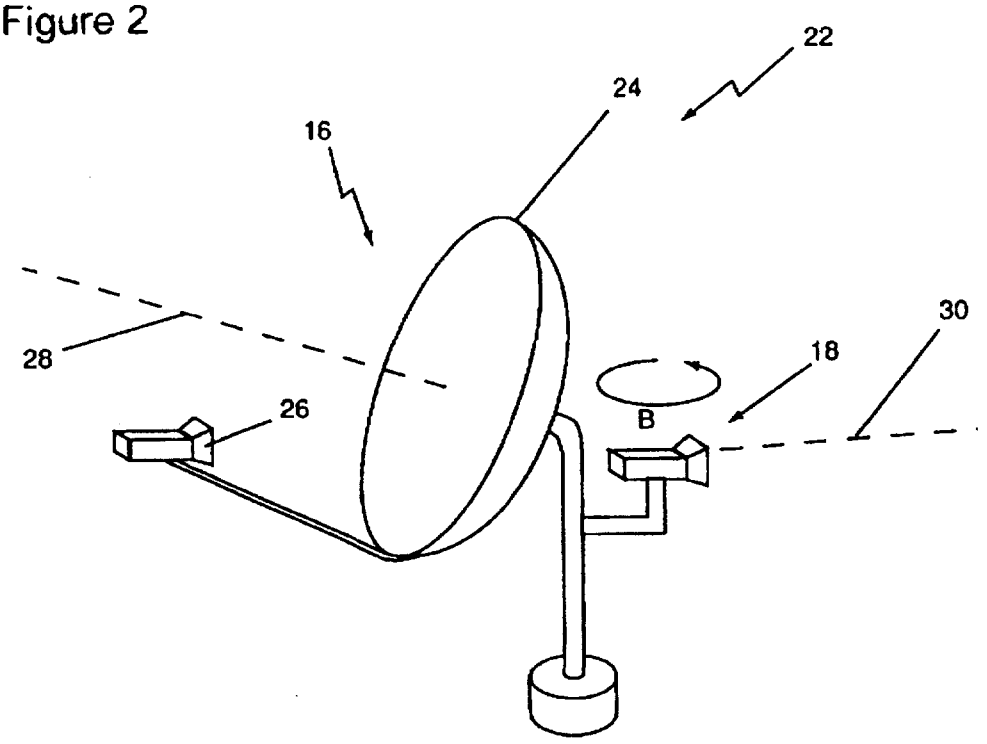

Figure 3

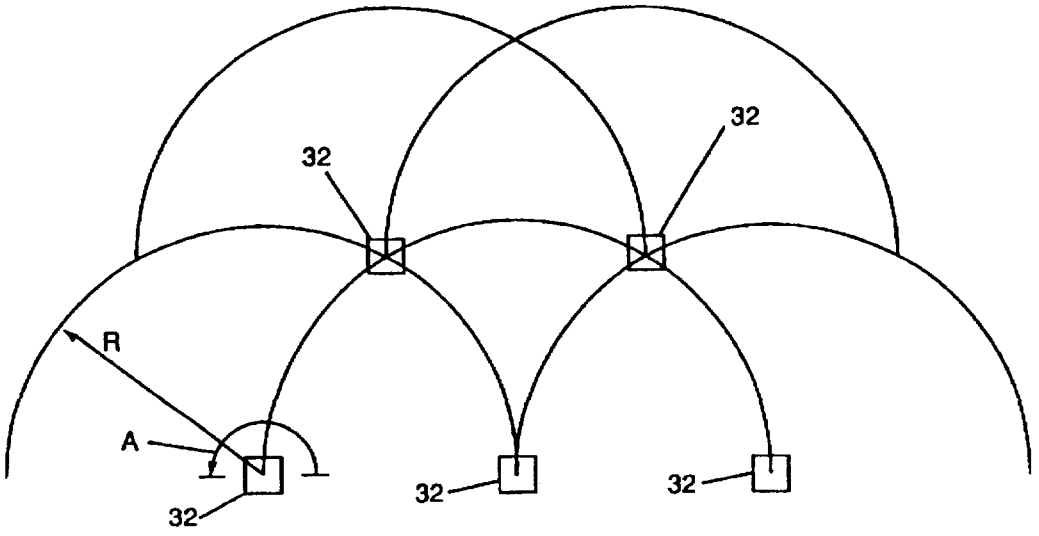

APPARATUS AND METHOD FOR REUSING SATELLITE BROADCAST SPECTRUM FOR TERRESTRIALLY BROADCAST SIGNALS

BACKGROUND OF THE INVENTION

This invention relates to apparatus and methods for broadcasting and receiving data, including digital television signals and voice signals. More particularly, this invention relates to an apparatus and method for providing terrestrial transmissions simultaneously along with direct broadcast satellite transmissions on a common frequency.

Currently, television signals may be received from a satellite in geosynchronous orbit about the earth. The television signals are transmitted from a terrestrial transmitter to the satellite and then retransmitted from the satellite so that the signals can be received by terrestrial receivers within a certain geographic receiving area within a line of sight of the satellite. In addition to television signals, other types of data may also be transmitted to consumers through satellites in geosynchronous orbit.

Direct broadcast satellite service (DBS) refers to satellite transmission of television signals directly for use by individual households or subscribers having the proper signal receiving equipment. The U.S. Federal Communications Commission has dedicated the electromagnetic spectrum from 12.2 gigahertz to 12.7 gigahertz for DBS broadcasting. Sixteen signal carriers are located within the DBS spectrum, each carrier carrying several individual television channels. Depending upon the compression technology applied to these signals, literally hundreds of separate channels may be available through DBS. A great benefit of the DBS system as opposed to prior satellite systems is that only a small dish-type antenna is required to receive the DBS signals and the alignment of the receiving dish is not critical. Also, the DBS system will provide high quality reception at any point in the geographic receiving area of a satellite without the expense of land transmission lines such as those required for cable television.

Current regulations require that DBS satellites be separated from each other by at least nine (9) degrees in a geosynchronous arc. The receiving antenna for DBS signals must, therefore, be limited to receiving signals in a directional range measuring plus or minus nine (9) degrees from a centerline of the antenna. Receiving signals in a range wider than the satellite spacing would cause interference by signals transmitted by different satellites on the same frequency.

U.S. Pat. No. 5,483,663 is directed to a system having a receiver arrangement in which DBS and terrestrial signals are received within similar frequency bands. The system shown in the 5,483,663 patent may be implemented with a multiple antenna arrangement, or with a single, moveable antenna. In the multiple antenna arrangement, two separate antennas direct the received signals to a common propagation path for processing as if they were received by a single antenna and transmitted from a single location. In the single antenna arrangement, the antenna is movable between a position to receive DBS signals and another position to receive terrestrial signals.

The advantage of the system shown in U.S. Pat. No. 5,483,663 is that local originating signals, whether television signals or other data, may be received simultaneously with DBS signals, and processed with the same equipment as that used to process the DBS signals. The local originating signals may carry local programming which may be received along with the national or regional DBS programming.

However, since the signals received in the system shown in U.S. Pat. No. 5,483,663 are combined or received on the same antenna structure at different points in time, terrestrial and DBS signals cannot be received simultaneously on a common frequency.

Despite the advantages of DBS and the advantages of the system shown in U.S. Pat. No. 5,483,663, the DBS system ties up a portion of the electromagnetic spectrum which would otherwise be available for terrestrial signal transmissions.

SUMMARY OF THE INVENTION

It is an object of the invention to provide terrestrially transmitted signals simultaneously with satellite transmitted signals at the same frequency. The invention includes an apparatus and method for providing terrestrial and satellite signals simultaneously at a common frequency.

The object of the invention is accomplished by utilizing receiving antennas with a limited directional reception range and transmitting the terrestrial signals in a different range of directions than those in which the satellite signals are transmitted. The invention requires two separate receiving antennas feeding two sets of decoding and demodulating processing systems for utilizing the received signals. Both receiving antennas are adapted to receive signals only within a particular directional range. The range is measured from a centerline of the particular antenna.

In order to ensure no interference between the satellite and terrestrially transmitted signals, the terrestrial signals are transmitted directionally within a terrestrial azimuth range which is outside the azimuth range in which the satellite signals are transmitted either by a single satellite or multiple satellites. The terrestrial transmit azimuth range is chosen so that it does not include any directions in which the satellite signal receiving antenna must be directed to receive signals from any satellite. In order to cover a large area for local reception, a plurality of terrestrial transmitters are spread out over an area with directional transmitted areas overlapping to ensure the terrestrial signals may be received clearly at each location within the desired service area.

These and other objects, advantages, and features of the invention will be apparent from the following description of the preferred embodiments, considered along with the accompanying drawings.

BRIEF DESCRIPTION OF THE DRAWINGS

FIG. 1 is a schematic representation showing the positions of a plurality of satellites in relation to a single terrestrial transmitter and a receiver or user location.

FIG. 2 is a somewhat schematic representation of a receiving antenna structure for receiving satellite and terrestrial transmitted signals at a common frequency.

FIG. 3 is a schematic representation of the spacing for a number of terrestrial transmitters required to allow reception over a large geographic area.

DESCRIPTION OF THE PREFERRED EMBODIMENTS

The apparatus according to the invention for providing satellite and terrestrially transmitted signals simultaneously on the same frequency illustrated in FIGS. 1 and 2. As shown in FIG. 1, the system 10 may be utilized with one or more satellites in geosynchronous orbit about the earth. FIG. 1 shows four satellites 12*a*, 12*b*, 12*c*, and 12*d* spaced apart at four separate directions from a user location 14. In

geosynchronous orbit, each satellite remains at a fixed location with respect to the earth's surface, and thus, with respect to the user location 14. First and second antenna 16 and 18, respectively, which will be discussed in detail with reference to FIG. 2 are located at the user location 14.

Each of these satellites 12*a–d* is positioned in geosynchronous orbit about the center of the earth, and is positioned at a certain longitude and latitude above the earth's surface. As is known by those skilled in the art, a receiving antenna may be directed at a certain elevation and direction or azimuth toward a desired satellite location for receiving signals from the particular satellite.

Currently, all direct broadcast satellites within the line of sight of North America are positioned at longitudes and latitudes requiring the receiving antenna to face in a southerly direction from North America to receive signals. Although FIG. 1 shows four satellites 12*a–d* for purposes of describing the invention herein, more or fewer satellites may be spaced apart within a line of sight of a certain geographical area. Eight satellites are currently within a line of sight of North America. Table 1 sets out the longitudinal location of each satellite and for purposes of example, the azimuth and elevation at which a receiving antenna must be directed from a location at Austin, Tex. for receiving signals from each satellite. All azimuth directions and elevations are measured to a centerline of the antenna which will be discussed below with respect to FIG. 2. The term "azimuth" refers to the direction with respect to a reference direction such as due north, commonly zero degrees. "Elevation" refers to the angle of the antenna centerline above horizontal.

Satellite Longitude	Azimuth	Elevation
61.5	124.5	37.3
101	186.4	54.6
110	203.3	52.3
119	217.7	47.8
148	247.3	25.7
157	253.3	17.9
166	258.8	10.1
175	263.5	2.3

DBS satellites all transmit different signals in the same frequency band. The U.S. Federal Communications Commission has set aside the electromagnetic spectrum from 12.2 gigahertz to 12.7 gigahertz for DBS broadcasting. In order to ensure no interference from signals between two adjacent satellites, two conditions must be met. First, the receiving antenna must be limited to receive signals only within a certain reception range about the centerline of the antenna. Secondly, the satellites must be spaced apart about the geosynchronous arc so that a receiving antenna may be positioned with only a single satellite transmitting in the directional reception range of the antenna.

According to current regulations, individual DBS satellites must be separated at least nine (9) degrees in the geosynchronous arc. Thus, each DBS receiving antenna must have a directional reception range or aperture of plus or minus nine (9) degrees or less as measured from a centerline of the antenna. Although current regulations require a spacing of no less than nine (9) degrees separation, the invention is not limited to this degree of separation. However, according to the invention, the effective reception range of each first antenna or satellite reception antenna must be less than or equal to the minimum satellite separation angle.

FIG. 1 also shows as terrestrial transmitter 20 capable of transmitting in one or more frequencies identical to a frequency transmitted by one of the DBS satellites. The terrestrial transmitter 20 transmits directionally within a certain transmission range T. The transmission range T shown in FIG. 1 is 180 degrees, although the range may be more or less than this number.

The antenna structure 22 according to the invention at the user location 14 in FIG. 1 is illustrated by way of example in FIG. 2. The first antenna 16 is designed to receive direct broadcast satellite signals. The first antenna 16 includes a collecting dish 24 and a feed-horn assembly 26 for receiving the signals reflected and concentrated by the dish. Those skilled in the art will readily appreciate that the feed-horn assembly 26 includes a probe, which is not shown in FIG. 2, for picking up the signal received by the antenna. The probe feeds the signal to signal processing equipment for extracting information from the received signal. This signal processing equipment is well known in the art and does not form a part of this invention. Also, those skilled in the art will appreciate that numerous types of assemblies may be used alternatively to the feed-horn assembly 26 for collecting signals reflected by the dish 24.

The first antenna 16 includes an antenna centerline 28. As dictated by the frequency of the signal received, the first antenna 16 has a maximum directional reception range d max. as measured from the antenna centerline 28. Signals propagating in a direction outside of this reception range or aperture about the antenna centerline 28 cannot be received by the first antenna 16.

Referring still to FIG. 2, the antenna structure 22 at the user location 14 further includes the separate second antenna 18 for receiving the terrestrially transmitted signals. The second antenna 18 is shown as a feed-horn type antenna, however, those skilled in the art will readily appreciate that the second antenna may include a circular wave guide antenna, flat plate antenna, slot antenna, dipole antenna or multi-dipole antenna. Regardless of the antenna type, the antenna will include a suitable signal pick-up assembly for picking up the signal received by the antenna and feeding the signal to suitable signal processing equipment. This processing equipment is separate from the processing equipment for processing the signals received by the first antenna 16. Also, although the second antenna 18 is shown connected to the same structure as the first antenna 16, the first and second antennas may be completely separate. In any event, the second antenna 18 is preferably rotatable about a vertical axis as shown at B in FIG. 2 to direct the antenna for optimally receiving the terrestrial transmitted signals.

As with the first antenna 16, the second antenna 18 includes a centerline 30 and may receive signals travelling only within a directional reception range r max. about the antenna centerline 30. Signals travelling in a direction outside that range cannot be received by the second antenna 18.

Referring again to FIG. 1, the first antenna 16 according to the invention, is directed to receive signals from one of the satellites, satellite 12*d* for example. The azimuth and elevation at which the first antenna 16 must be directed for optimally receiving signals from satellite 12*d* may be 247.3 and 25.7 respectively, for example. The second antenna 18 is directed with its centerline 30 pointing generally to the terrestrial transmitting location of the terrestrial transmitter 20 and essentially horizontally. Ignoring the elevation difference between the first and second antennas 16 and 18, respectively, the azimuth difference between the centerlines

28 and 30 of the two antennas and this example is approximately 67.7 degrees.

In the orientation shown in FIG. 1, the first antenna 16 cannot receive signals from the terrestrial transmitter 20. The reason for this is that the directional signals transmitted from the terrestrial transmitter 20 are all travelling in a direction outside of the reception range of the first antenna 16. Similarly, the direction in which the satellite 12*d* transmits with respect to the user location 14 is outside of the reception range of the second antenna 18. Thus, the second antenna 18 cannot receive signals transmitted by the satellite 12*d*. Furthermore, in this example, the second antenna 18 cannot receive any signals transmitted by any of the satellites 12*a–d*. Thus, in the orientation of the first and second antenna 16 and 18 as shown in FIG. 1 and with the position of the satellites 12*a–d* and terrestrial transmitter 20, the terrestrial transmitter may transmit on a frequency identical to the frequency of signals transmitted by the satellites without any interference in the signals received at the two antennas.

Those skilled in the art will readily appreciate that the elevation of the first antenna 16 may be high enough with respect to horizontal so that the second antenna 18 may be aligned along the same azimuth as the first antenna without any interference between the signals received by the two antennas on the identical frequency. However, where there are numerous satellites at different azimuths and elevations with respect to the user location 14, the first and second antennas 16 and 18 may have to be positioned at different azimuths as illustrated in FIG. 1 in order to prevent interference.

Referring to FIG. 3, a plurality of terrestrial transmitters 32 are required to provide a signal strong enough to be received over a large area. Each transmitter 32 in FIG. 3 transmits directionally in an azimuth range A of approximately 180 degrees and out to an effective reception range R. With this transmitter spacing and transmission range, the signals from the terrestrial transmitters may be received from any location within the geographic area G. Although the directional range of 180 degrees is shown for purposes of example, the terrestrial transmissions may be in other ranges within the scope of this invention.

The method according to the invention comprises receiving satellite signals in a first frequency with the first antenna 16. The first antenna 16 is adapted to receive signals only within a first directional reception range from the antenna centerline 28. The method also includes transmitting signals in the first frequency directionally in a range outside of the directional reception range of the first antenna 16. Signals transmitted by the terrestrial transmitter are received by the second antenna 18 at the user location 14. The second antenna 18 is also adapted to receive signals only within a directional reception range with respect to the antenna centerline 30.

This combination of directional receiving antennas 16 and 18, and directional terrestrial transmission allows terrestrial transmissions at an identical frequency as that used by satellites, and particularly DBS without interference between the two transmissions. This allows the DBS spectrum and perhaps other satellite spectra to be reused for terrestrial transmissions. The terrestrial transmissions may be for television signals or any other data, including internet communications, voice data, other video, or any other type of data.

The above described preferred embodiments are intended to illustrate the principles of the invention, but not to limit the scope of the invention. Various other embodiments and modifications to these preferred embodiments may be made by those skilled in the art without departing from the scope of the following claims.

We claim:

1. An apparatus for simultaneously providing terrestrially transmitted signals on a common frequency with direct broadcast satellite signals transmitted from a satellite in a first satellite location in geosynchronous orbit about the earth, the apparatus comprising:

(a) a first antenna at a user location for receiving signals at a first frequency only within a first directional reception range as measured from a centerline of the first antenna, the first antenna having its centerline aligned to receive direct broadcast satellite signals transmitted from the satellite;

(b) a second antenna at the user location for receiving signals at the first frequency only within a second directional reception range as measured from a centerline of the second antenna, the second antenna being aligned to receive signals transmitted at the first frequency from a terrestrial transmitter location remote from the user location with the direct broadcast satellite signals transmitted in directions outside of the second directional reception range; and

(c) a terrestrial transmitter for transmitting signals at the first frequency and directionally within a terrestrial azimuth range from the terrestrial transmitter location, the terrestrial transmitter location being located with respect to the user location such that the terrestrial transmitter transmits in directions only outside of the directional reception range of the first antenna.

2. The apparatus of claim 1 wherein direct broadcast satellite signals are transmitted from a plurality of satellites in geosynchronous orbit, each satellite separated from each other satellite in a geosynchronous arc by an angle greater than the first directional range of the first antenna and each satellite within a satellite azimuth range within which the first antenna may be positioned to receive signals from any of the satellites, and wherein:

(a) the terrestrial azimuth range is separated from the satellite azimuth range by an angle greater than approximately the sum of directional reception range of the first antenna and the directional reception range of the second antenna.

3. The apparatus of claim 2 further comprising:

(a) a plurality of terrestrial transmitters each transmitting from a different terrestrial transmission location and each transmitting in a substantially common azimuth range.

4. The apparatus of claim 1 wherein the first frequency is in a range of 12.2 gigahertz to 12.7 gigahertz.

5. The apparatus of claim 1 wherein the first frequency is above 12.2 gigahertz.

6. The apparatus of claim 1 wherein the second antenna is selected from the group consisting of circular wave guide antennas, feed-horn antennas, flat plate antennas, slot antennas, dipole antennas, and multi-dipole antennas.

7. The apparatus of claim 1 wherein the directional reception range of the first antenna is approximately nine (9) degrees.

8. A method for simultaneously providing local originating signals on a common frequency with direct broadcast satellite signals transmitted from a satellite, where the satellite is in a first satellite location in geosynchronous orbit about the earth, the method comprising the steps of:

(a) at a user location, receiving direct broadcast satellite signals at a first frequency with a first antenna adapted to receive signals at the first frequency only within a first directional reception range as measured from a centerline of the first antenna;

(b) transmitting terrestrial signals at the first frequency and in a terrestrial azimuth range from a terrestrial transmitter, the terrestrial azimuth range being outside of the directional reception range of the first antenna positioned to receive direct broadcast satellite signals from the satellite; and

(c) at the user location, remote from the terrestrial transmitter, receiving the terrestrial signals with a second antenna adapted for receiving signals at the first frequency only within a second directional reception range as measured from a centerline of the second antenna, the second antenna being aligned so that the direct broadcast satellite signals transmitted by the satellite are not transmitted within the directional reception range of the second antenna.

9. The method of claim **8** further comprising the step of:

(a) transmitting terrestrial signals at the first frequency and terrestrial azimuth range from a plurality of terrestrial transmitters.

10. The method of claim **8** wherein the first frequency is in the range of 12.2 gigahertz to 12.7 gigahertz.

11. The method of claim **8** wherein the first frequency is above 12.2 gigahertz.

12. The method of claim **8** wherein the directional range of the first and second antenna is approximately nine (9) degrees from the antenna centerline.

* * * * *

US006169878B1

(12) **United States Patent**
Tawil et al.

(10) **Patent No.: US 6,169,878 B1**
(45) **Date of Patent: *Jan. 2, 2001**

(54) **APPARATUS AND METHOD FOR TRANSMITTING TERRESTRIAL SIGNALS ON A COMMON FREQUENCY WITH SATELLITE TRANSMISSIONS**

(75) Inventors: **Carmen Tawil; Saleem Tawil**, both of Austin, TX (US)

(73) Assignee: **Northpoint Technology, Ltd.**, Austin, TX (US)

(*) Notice: This patent issued on a continued prosecution application filed under 37 CFR 1.53(d), and is subject to the twenty year patent term provisions of 35 U.S.C. 154(a)(2).

Under 35 U.S.C. 154(b), the term of this patent shall be extended for 0 days.

This patent is subject to a terminal disclaimer.

(21) Appl. No.: **08/991,265**

(22) Filed: **Dec. 16, 1997**

Related U.S. Application Data

(63) Continuation of application No. 08/731,244, filed on Oct. 11, 1996, now Pat. No. 5,761,605.

(51) **Int. Cl.**[7] **H04H 1/00**; H04B 7/185

(52) **U.S. Cl.** **455/3.2**; 455/13.3

(58) **Field of Search** ..... 455/3.2, 13.3, 455/427, 430, 12.1, 63, 272, 188.1, 179.1, 561, 562; 348/6, 12, 13; 343/878–879, 725, 893, DIG. 2, 705

(56) **References Cited**

U.S. PATENT DOCUMENTS

5,604,508 * 2/1997 Atkinson 343/879
5,729,825 * 3/1998 Kostreski et al. 455/3.1

* cited by examiner

Primary Examiner—Nguyen Vo
(74) *Attorney, Agent, or Firm*—Shaffer & Culbertson, LLP; Russell D. Culbertson

(57) **ABSTRACT**

A first antenna **(16)** at a user location **(14)** receives signals at a first frequency where the signals are travelling only within a first directional reception range as measured from a centerline **(28)** of the first antenna **(16)**. The first antenna **(16)** has its centerline **(28)** aligned to receive direct broadcast satellite signals transmitted from a satellite in geosynchronous orbit about the earth. A second antenna **(18)** at the user location **(14)** receives signals at the first frequency where the signals are travelling only within a second directional reception range as measured from a centerline **(30)** of the second antenna **(18)**. The second antenna **(18)** is aligned to receive signals transmitted at the first frequency from a terrestrial transmitting location remote from the user location. A terrestrial transmitter transmits signals at the first frequency and directionally within a terrestrial azimuth range from the terrestrial transmitting location. The terrestrial transmitting location is located with respect to the user location **(14)** such that the terrestrial transmitter **(20)** transmits in directions only outside of the directional reception range of the first antenna **(16)**. The satellite **(12)** is positioned with respect to the user location **(14)** such that the satellite transmits directional in directions outside of the directional reception range of the second antenna **(18)**.

23 Claims, 2 Drawing Sheets

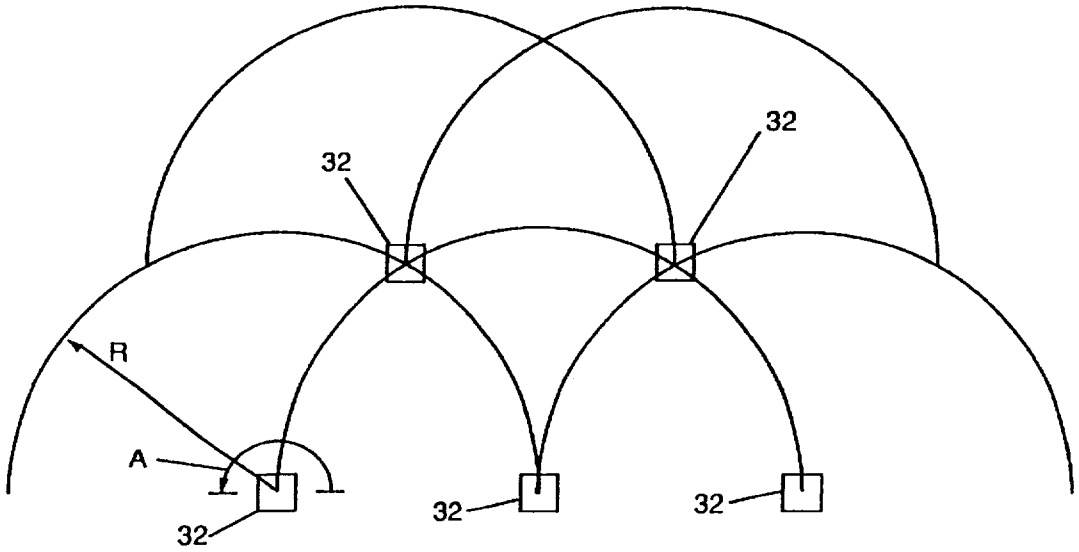

Figure 1

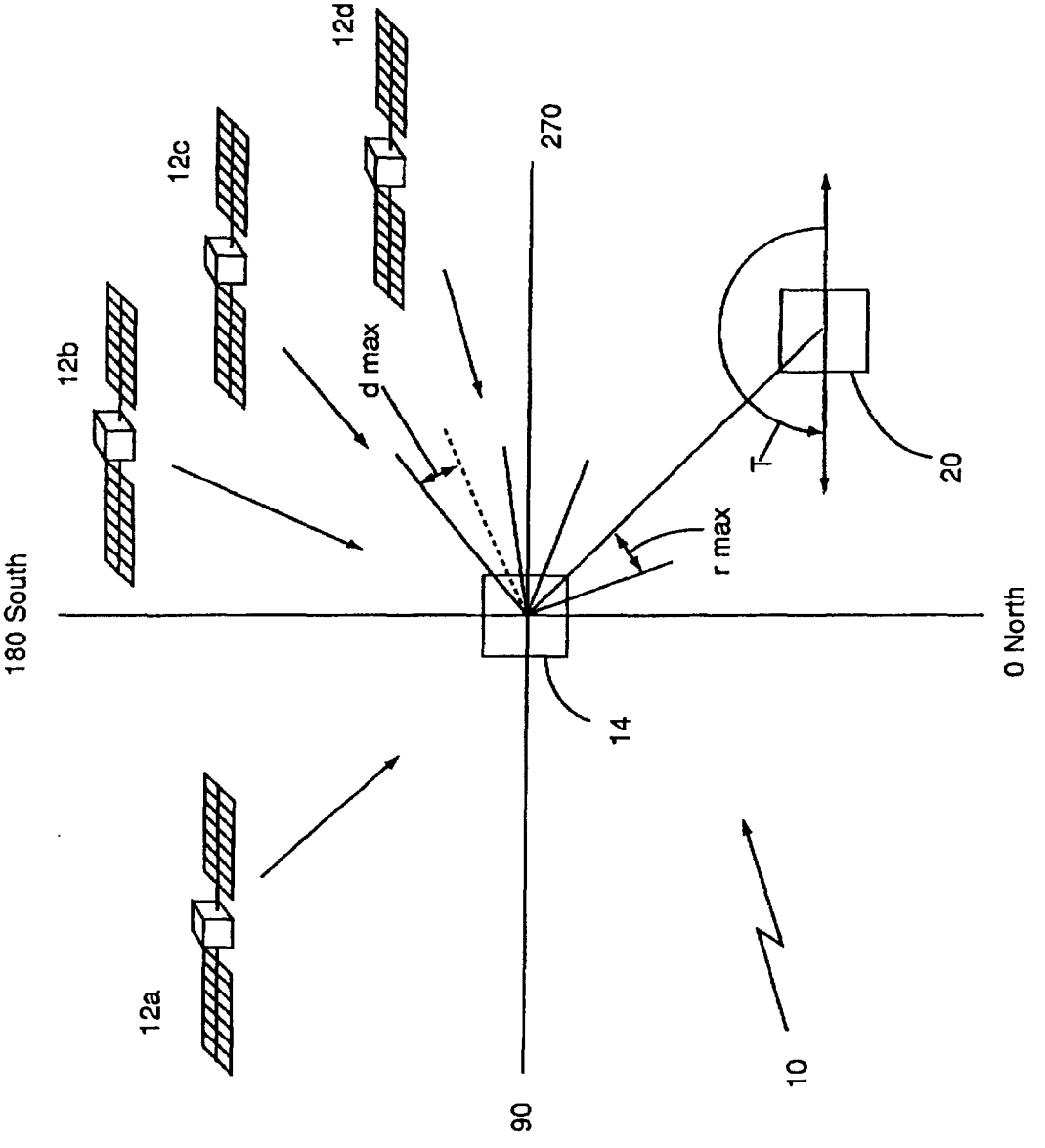

Figure 2

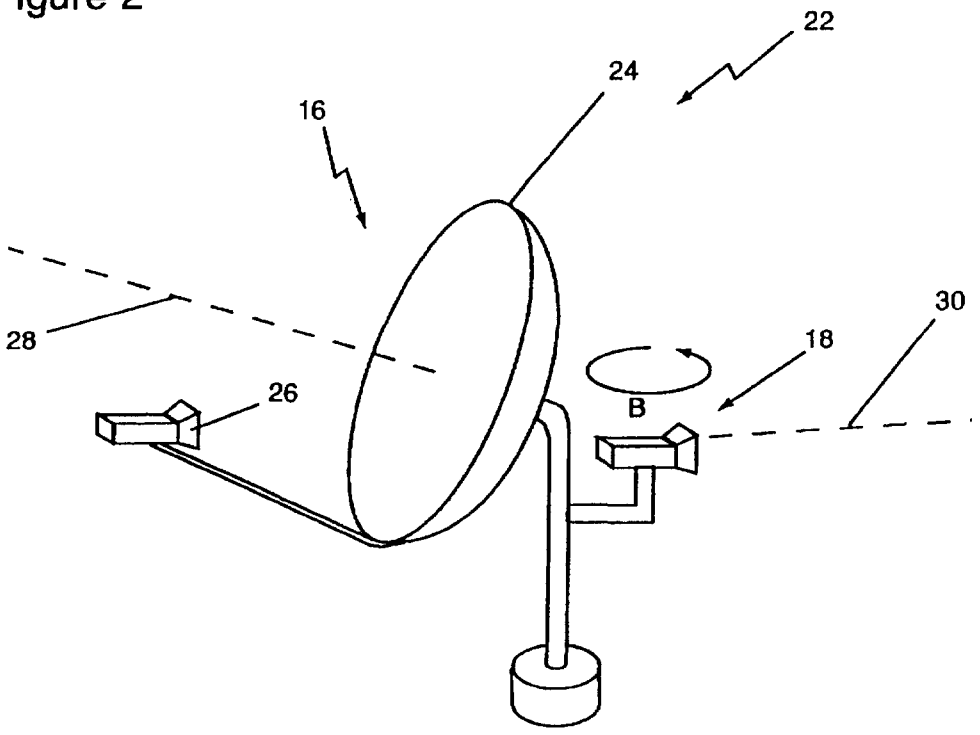

Figure 3

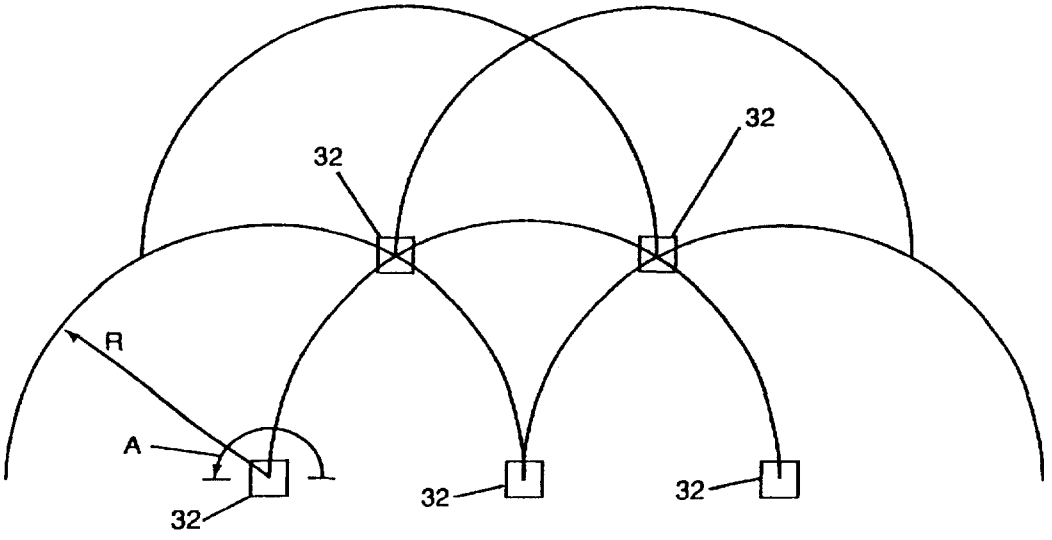

APPARATUS AND METHOD FOR TRANSMITTING TERRESTRIAL SIGNALS ON A COMMON FREQUENCY WITH SATELLITE TRANSMISSIONS

This application is a continuation of application Ser. No. 08/731,244, filed Oct. 11, 1996, now U.S. Pat. No. 5,761,605.

BACKGROUND OF THE INVENTION

This invention relates to devices and methods for broadcasting and receiving data, including digital television signals and voice signals. More particularly, this invention relates to an apparatus and method for providing terrestrial transmissions simultaneously along with direct broadcast satellite transmissions on a common frequency.

Currently, television signals may be received from a satellite in geosynchronous orbit about the earth. The television signals are transmitted from a terrestrial transmitter to the satellite and then retransmitted from the satellite so that the signals can be received by terrestrial receivers within a certain geographic receiving area within a line of sight of the satellite. In addition to television signals, other types of data may also be transmitted to consumers through satellites in geosynchronous orbit.

Direct broadcast satellite service (DBS) refers to satellite transmission of television signals directly for use by individual households or subscribers having the proper signal receiving equipment. The U.S. Federal Communications Commission has dedicated the electromagnetic spectrum from 12.2 gigahertz to 12.7 gigahertz for DBS broadcasting. Numerous signal carriers are located within the DBS spectrum, each carrier carrying several individual television channels. Depending upon the compression technology applied to these signals, literally hundreds of separate channels may be available through DBS. A great benefit of the DBS system as opposed to prior satellite systems is that only a small dish-type antenna is required to receive the DBS signals and the alignment of the receiving dish is not critical. Also, the DBS system will provide high quality reception at any point in the geographic receiving area of a satellite without the expense of land transmission lines such as those required for cable television.

Current regulations require that DBS satellites be separated from each other by at least nine (9) degrees in a geosynchronous arc. The receiving antenna for DBS signals must, therefore, be limited to receiving signals in a directional range measuring plus or minus nine (9) degrees from a centerline of the antenna. Receiving signals in a range wider than the satellite spacing would cause interference by signals transmitted by different satellites on the same frequency.

U.S. Pat. No. 5,483,663 is directed to a system having a receiver arrangement in which DBS and terrestrial signals are received within similar frequency bands. The system shown in the U.S. Pat. No. 5,483,663 may be implemented with a multiple antenna arrangement, or with a single, moveable antenna. In the multiple antenna arrangement, two separate antennas direct the received signals to a common propagation path for processing as if they were received by a single antenna and transmitted from a single location. In the single antenna arrangement, the antenna is movable between a position to receive DBS signals and another position to receive terrestrial signals.

The advantage of the system shown in U.S. Pat. No. 5,483,663 is that local originating signals, whether television signals or other data, may be received simultaneously with DBS signals, and processed with the same equipment as that used to process the DBS signals. The local originating signals may carry local programming which may be received along with the national or regional DBS programming.

However, since the signals received in the system shown in U.S. Pat. No. 5,483,663 are combined or received on the same antenna structure at different points in time, terrestrial and DBS signals on a common frequency cannot be utilized simultaneously.

SUMMARY OF THE INVENTION

It is an object of the invention to provide terrestrially transmitted signals simultaneously with satellite transmitted signals at the same frequency. The invention includes an apparatus and method for providing terrestrial signals simultaneously at a common frequency with satellite signals.

The object of the invention is accomplished by utilizing receiving antennas with a limited directional reception range and transmitting the terrestrial signals in a different range of directions than those in which the satellite signals are transmitted. Two separate receiving antennas feeding two sets of decoding and demodulating processing systems are required for utilizing the received signals. Both receiving antennas are adapted to receive signals only within a particular directional range. The range is measured from a centerline of the particular antenna.

In order to ensure no interference between the satellite and terrestrially transmitted signals, the terrestrial signals are transmitted directionally within a terrestrial azimuth range which is outside the azimuth range in which the satellite signals are transmitted either by a single satellite or multiple satellites. The terrestrial transmission azimuth range is chosen so that it does not include any directions in which the satellite signal receiving antenna must be directed to receive signals from any satellite. In order to cover a large area for local reception, a plurality of terrestrial transmitters are spread out over an area with directional transmission areas overlapping to ensure the terrestrial signals may be received clearly at each location within the desired service area.

These and other objects, advantages, and features of the invention will be apparent from the following description of the preferred embodiments, considered along with the accompanying drawings.

BRIEF DESCRIPTION OF THE DRAWINGS

FIG. 1 is a schematic representation showing the positions of a plurality of satellites in relation to a single terrestrial transmitter and a receiver or user location.

FIG. 2 is a somewhat schematic representation of a receiving antenna structure for receiving satellite and terrestrial transmitted signals at a common frequency.

FIG. 3 is a schematic representation of the spacing for a number of terrestrial transmitters required to allow reception over a large geographic area.

DESCRIPTION OF THE PREFERRED EMBODIMENTS

The apparatus according to the invention for providing terrestrially transmitted signals simultaneously on the same frequency as satellite signals is illustrated in FIGS. 1 and 2. As shown in FIG. 1, the system 10 may be utilized with one or more satellites in geosynchronous orbit about the earth.

FIG. 1 shows four satellites 12*a*, 12*b*, 12*c*, and 12*d* spaced apart at four separate directions from a user location **14**. In geosynchronous orbit, each satellite remains at a fixed location with respect to the earth's surface, and thus, with respect to the user location **14**. First and second antenna **16** and **18**, respectively, which will be discussed in detail with reference to FIG. 2 are located at the user location **14**.

Each of these satellites 12*a–d* is positioned in geosynchronous orbit about the center of the earth, and is positioned at a certain longitude and latitude above the earth's surface. As is known by those skilled in the art, a receiving antenna may be directed at a certain elevation and direction or azimuth toward a desired satellite location for receiving signals from the particular satellite.

Currently, all direct broadcast satellites within the line of sight of North America are positioned at longitudes and latitudes requiring the receiving antenna to face in a southerly direction from North America to receive signals. Although FIG. 1 shows four satellites 12*a–d* for purposes of describing the invention herein, more or fewer satellites may be spaced apart within a line of sight of a certain geographical area. Several satellites are currently within a line of sight of North America. Table 1 sets out the longitudinal location of each satellite and for purposes of example, the azimuth and elevation at which a receiving antenna must be directed from a location at Austin, Texas for receiving signals from each satellite. All azimuth directions and elevations are measured to a centerline of the antenna which will be discussed below with respect to FIG. 2. The term "azimuth" refers to the direction with respect to a reference direction such as due north, commonly zero degrees. "Elevation" refers to the angle of the antenna centerline above horizontal.

TABLE 1

Satellite Longitude	Azimuth	Elevation
61.5	124.5	37.3
101	186.4	54.6
110	203.3	52.3
119	217.7	47.8
148	247.3	25.7
157	253.3	17.9
166	258.8	10.1
175	263.5	2.3

DBS satellites all transmit different signals in the same frequency band. The U.S. Federal Communications Commission has set aside the electromagnetic spectrum from 12.2 gigahertz to 12.7 gigahertz for DBS broadcasting. In order to ensure no interference from signals between two adjacent satellites, two conditions must be met. First, the receiving antenna must be limited to receive signals only within a certain reception range about the centerline of the antenna. Secondly, the satellites must be spaced apart about the geosynchronous arc so that a receiving antenna may be positioned with only a single satellite transmitting in the directional reception range of the antenna.

According to current regulations, individual DBS satellites must be separated at least nine (9) degrees in the geosynchronous arc. Thus, each DBS receiving antenna must have a directional reception range or aperture of plus or minus nine (9) degrees or less as measured from a centerline of the antenna. Although current regulations require a spacing of no less than nine (9) degrees separation, the invention is not limited to this degree of separation. However, according to the invention, the effective reception range of each first antenna or satellite reception antenna must be less than or equal to the minimum satellite separation angle.

FIG. 1 also shows a terrestrial transmitter **20** capable of transmitting in one or more frequencies identical to a frequency transmitted by one of the DBS satellites. The terrestrial transmitter **20** transmits directionally within a certain transmission range T. The transmission range T shown in FIG. 1 is 180 degrees, although the range may be more or less than this number.

The antenna structure **22** which may be used at user location **14** (FIG. 1) to pick up signals transmitted according to the invention is illustrated in FIG. 2. The first antenna **16** is designed to receive direct broadcast satellite signals. The first antenna **16** includes a collecting dish **24** and a feed-horn assembly **26** for receiving the signals reflected and concentrated by the dish. Those skilled in the art will readily appreciate that the feed-horn assembly **26** includes a probe, which is not shown in FIG. 2, for picking up the signal received by the antenna. The probe feeds the signal to signal processing equipment for extracting information from the received signal. This signal processing equipment is well known in the art and does not form a part of this invention. Also, those skilled in the art will appreciate that numerous types of assemblies may be used alternatively to the feed-horn assembly **26** for collecting signals reflected by the dish **24**.

The first antenna **16** includes an antenna centerline **28**. As dictated by the frequency of the signal received, the first antenna **16** has a maximum directional reception range d max. as measured from the antenna centerline **28**. The total reception range for antenna **16** shall be referred to in this disclosure and the accompanying claims as the "satellite" or "first" directional reception range, and is equal to two times the reception range d max. Signals propagating in a direction outside of this satellite directional reception range or aperture about the antenna centerline **28** from user location **14** cannot be received by the first antenna **16**.

Referring still to FIG. 2, the antenna structure **22** at the user location **14** further includes the separate second antenna **18** for receiving the terrestrially transmitted signals. The second antenna **18** is shown as a feed-horn type antenna, however, those skilled in the art will readily appreciate that the second antenna may include a circular wave guide antenna, flat plate antenna, slot antenna, dipole antenna or multi-dipole antenna. Regardless of the antenna type, the antenna will include a suitable signal pick-up assembly for picking up the signal received by the antenna and feeding the signal to suitable signal processing equipment. This processing equipment is separate from the processing equipment for processing the signals received by the first antenna **16**. Also, although the second antenna **18** is shown connected to the same structure as the first antenna **16**, the first and second antennas may be completely separate. In any event, the second antenna **18** is preferably rotatable about a vertical axis as shown at B in FIG. 2 to direct the antenna for optimally receiving the terrestrial transmitted signals.

As with the first antenna **16**, the second antenna **18** includes a centerline **30** and may receive signals travelling only within a directional reception range r max. about the antenna centerline **30**. The total reception range for second antenna **18** shall be referred to in this disclosure and the accompanying claims as the "terrestrial" or "second" directional reception range, and is equal to two times the reception range r max. Signals travelling to user location **14** along a route outside that terrestrial directional reception range cannot be received by the second antenna **18**.

Referring again to FIG. 1, the first antenna **16** according to the invention, is directed to receive signals from one of the satellites, satellite **12***d* for example. The azimuth and elevation at which the first antenna **16** must be directed for optimally receiving signals from satellite **12***d* may be 247.3 and 25.7 respectively, for example. The second antenna **18** is directed with its centerline **30** pointing generally to the terrestrial transmitting location of the terrestrial transmitter **20** and essentially horizontally. Ignoring the elevation difference between the first and second antennas **16** and **18**, respectively, the azimuth difference between the centerlines **28** and **30** of the two antennas and this example is approximately 67.7 degrees.

In the orientation shown in FIG. 1, the first antenna **16** cannot receive signals from the terrestrial transmitter **20**. The reason for this is that the directional signals transmitted from the terrestrial transmitter **20** are all travelling in a direction or along a route outside of the satellite directional reception range of the first antenna **16**. Similarly, the direction in which the satellite **12***d* transmits with respect to the user location **14** is outside of the terrestrial directional reception range of the second antenna **18**. Thus, the second antenna **18** cannot receive signals transmitted by the satellite **12***d*. Furthermore, in this example, the second antenna **18** cannot receive any signals transmitted by any of the satellites **12***a–d*. Thus, in the orientation of the first and second antenna **16** and **18** as shown in FIG. 1 and with the position of the satellites **12***a–d* and terrestrial transmitter **20**, the terrestrial transmitter may transmit on a frequency identical to the frequency of signals transmitted by the satellites without any interference in the signals received at the two antennas.

Those skilled in the art will readily appreciate that the elevation of the first antenna **16** may be high enough with respect to horizontal so that the second antenna **18** may be aligned along the same azimuth as the first antenna without any interference between the signals received by the two antennas on the identical frequency. However, where there are numerous satellites at different azimuths and elevations with respect to the user location **14**, the first and second antennas **16** and **18** may have to be positioned at different azimuths as illustrated in FIG. 1 in order to prevent interference.

Referring to FIG. 3, a plurality of terrestrial transmitters **32** are required to provide a signal strong enough to be received over a large area. Each transmitter **32** in FIG. 3 transmits directionally in an azimuth range A of approximately 180 degrees and out to an effective reception range R. With this transmitter spacing and transmission range, the signals from the terrestrial transmitters may be received from any location within the geographic area G. Although the directional range of 180 degrees is shown for purposes of example, the terrestrial transmissions may be in other ranges within the scope of this invention.

The method according to the invention is used in situations in which satellite signals are being transmitted in a first frequency for reception with the first antenna **16**. The first antenna **16** is adapted to receive signals only within the satellite directional reception range about the antenna centerline **28**. The method includes transmitting signals in the first frequency directionally in a range outside of the satellite directional reception range of the first antenna **16**. Signals transmitted by the terrestrial transmitter are received by the second antenna **18** at the user location **14**. The second antenna **18** is adapted to receive signals only within the terrestrial directional reception range about the antenna centerline **30**.

This directional terrestrial transmission according to the invention allows terrestrial transmission at an identical frequency as that used by satellites, and particularly DBS without interference between the two transmissions. This allows the DBS spectrum and perhaps other satellite spectra to be reused for terrestrial transmissions. The terrestrial transmissions may be for television signals or any other data, including internet communications, voice data, other video, or any other type of data.

The above described preferred embodiments are intended to illustrate the principles of the invention, but not to limit the scope of the invention. Various other embodiments and modifications to these preferred embodiments may be made by those skilled in the art without departing from the scope of the following claims.

What is claimed is:

1. An apparatus for simultaneously transmitting terrestrial signals on a common frequency with satellite signals transmitted from a satellite, the satellite transmitting satellite signals at a first frequency to a user location for reception only within a satellite directional reception range about the user location, the apparatus comprising:

(a) a directional terrestrial transmitter for transmitting terrestrial signals at the first frequency in a limited azimuth range around the location of the terrestrial transmitter, the terrestrial transmitter being located with respect to the user location such that the terrestrial transmitter transmits to the user location along a route which is outside of the satellite directional reception range.

2. The apparatus of claim **1** wherein satellite signals are transmitted from a plurality of satellites in geosynchronous orbit, each satellite separated from each other satellite in a geosynchronous arc by an angle greater than one half of the satellite directional reception range and the satellites together transmit satellite signals to the user location only within a combined satellite signal transmission range about the user location, and wherein:

(a) the terrestrial transmitter transmits only in directions which are outside of the combined satellite signal transmission range and an angle equal to one half of the satellite directional reception range outside of the boundaries of the combined satellite signal transmission range.

3. The apparatus of claim **2** further comprising:

(a) a plurality of terrestrial directional transmitters, each transmitting from a different terrestrial transmission location and each transmitting directionally in a limited azimuth range.

4. The apparatus of claim **1** wherein the first frequency is in a range of 12.2 gigahertz to 12.7 gigahertz.

5. The apparatus of claim **1** wherein the first frequency is above 12.2 gigahertz.

6. The apparatus of claim **1** wherein the satellite directional reception range is approximately eighteen (18) degrees.

7. A method for simultaneously providing terrestrial signals on a common frequency with satellite signals transmitted from a satellite, where the satellite is transmitting at a first frequency along a satellite transmission axis extending from the satellite to a terrestrial user location, the method comprising the step of:

(a) transmitting terrestrial signals at the first frequency in a limited azimuth range from a terrestrial transmitter,

the terrestrial transmitter being located with respect to the user location so as to transmit to the user location along a transmission route which is outside of a satellite directional reception range about the user location, wherein the satellite directional reception range comprises a limited directional range substantially centered on the satellite transmission axis.

8. The method of claim **7** further comprising the step of:

(a) transmitting terrestrial signals at the first frequency and within a limited terrestrial azimuth range from a plurality of terrestrial transmitters at different locations.

9. The method of claim **7** wherein the first frequency is in the range of 12.2 gigahertz to 12.7 gigahertz.

10. The method of claim **7** wherein the first frequency is above 12.2 gigahertz.

11. The method of claim **7** wherein the satellite directional reception range is approximately eighteen (18) degrees.

12. An apparatus for facilitating the use of terrestrial transmitted signals which are transmitted on a common frequency simultaneously with satellite signals transmitted from a satellite, the satellite transmitting satellite signals at a first frequency to a terrestrial user location along a satellite transmission axis, the apparatus comprising:

(a) a terrestrial transmitter for transmitting terrestrial signals at the frequency to the user location, the terrestrial transmitter being location with respect to the user location such that the terrestrial transmitter transmits to the user location along a route which is outside of a satellite directional reception range about the user location, wherein the satellite directional reception range comprises a limited directional range substantially centered on the satellite transmission axis; and

(b) a terrestrial receiving antenna at the user location for receiving signals at the first frequency only within a terrestrial directional reception range about a centerline of the terrestrial antenna, the terrestrial antenna being aligned to receive signals transmitted at the first frequency from the terrestrial transmitter location, and being aligned so that the satellite transmission axis is outside of the terrestrial directional reception range.

13. The apparatus of claim **12** wherein satellite signals are transmitted from a plurality of satellites in geosynchronous orbit, each satellite separated from each other satellite in a geosynchronous arc by an angle greater than an angle equal to one half of the satellite directional reception range and the satellites together transmit satellite signals to the user location only within a combined satellite signal transmission range about the user location, and wherein:

(a) the terrestrial transmitter transmits only in directions which are outside of the combined satellite signal transmission range and an angle equal to one half of the satellite directional reception range outside of the boundaries of the combined satellite signal transmission range.

14. The apparatus of claim **13** further comprising:

(a) a plurality of terrestrial transmitters each transmitting from a different terrestrial transmission location and each transmitting directionally in a limited azimuth range.

15. The apparatus of claim **12** wherein the first frequency is in a range of 12.2 gigahertz to 12.7 gigahertz.

16. The apparatus of claim **12** wherein the first frequency is above 12.2 gigahertz.

17. The apparatus of claim **12** wherein the satellite directional reception range is approximately eighteen (18) degrees.

18. An apparatus for simultaneously transmitting terrestrial signals on a common frequency with satellite signals transmitted from a satellite, the satellite transmitting satellite signals at a first frequency to a user location for reception only within a satellite directional reception range about the user location, the apparatus comprising:

(a) a terrestrial for transmitting terrestrial signals at the first frequency from a fixed terrestrial location which forms a fixed geometry with the user location and the satellite, the terrestrial transmitter being located with respect to the user location such that the terrestrial transmitter transmits to the user location along a route which is outside of the satellite directional reception range about the user location.

19. The apparatus of claim **18** wherein satellite signals are transmitted from a plurality of satellites in geosynchronous orbit, each satellite separated from each other satellite in a geosynchronous arc by an angle greater than one half of the satellite directional reception range and the satellites together transmit satellite signals to the user location only within a combined satellite signal transmission range about the user location, and wherein:

(a) the terrestrial transmitter transmits only in directions which are outside of the combined satellite signal transmission range and an angle equal to one half of the satellite directional reception range outside of the boundaries of the combined satellite signal transmission range.

20. The apparatus of claim **18** further comprising:

(a) a plurality of terrestrial transmitters, each transmitting from a different fixed terrestrial transmission location which forms a fixed geometry with the satellite and the user location.

21. The apparatus of claim **18** wherein the first frequency is in a range of 12.2 gigahertz to 12.7 gigahertz.

22. The apparatus of claim **18** wherein the first frequency is above 12.2 gigahertz.

23. The apparatus of claim **18** wherein the satellite directional reception range is approximately eighteen (18) degrees.

* * * * *

US006208834B1

(12) **United States Patent**
Tawil et al.

(10) **Patent No.: US 6,208,834 B1**
(45) **Date of Patent: Mar. 27, 2001**

(54) **APPARATUS AND METHOD FOR FACILITATING TERRESTRIAL TRANSMISSIONS AT FREQUENCIES ALSO USED FOR SATELLITE TRANSMISSIONS TO A COMMON GEOGRAPHIC AREA**

(75) Inventors: **Saleem Tawil**; **Carmen Tawil**, both of Austin, TX (US)

(73) Assignee: **Northpoint Technology, Ltd.**, Portsmouth, NH (US)

(*) Notice: This patent issued on a continued prosecution application filed under 37 CFR 1.53(d), and is subject to the twenty year patent term provisions of 35 U.S.C. 154(a)(2).

Subject to any disclaimer, the term of this patent is extended or adjusted under 35 U.S.C. 154(b) by 0 days.

This patent is subject to a terminal disclaimer.

(21) Appl. No.: **09/001,766**

(22) Filed: **Dec. 31, 1997**

Related U.S. Application Data

(63) Continuation-in-part of application No. 08/731,244, filed on Oct. 11, 1996, now Pat. No. 5,761,605.

(51) **Int. Cl.**[7] **H04H 1/00**; H04B 7/185

(52) **U.S. Cl.** **455/3.2**; 455/13.3

(58) **Field of Search** 455/3.2, 13.3, 455/427, 430, 12.1, 63, 272, 188.1, 179.1, 562; 348/6, 12, 13; 343/879, 893, 878, 840

(56) **References Cited**

U.S. PATENT DOCUMENTS

D. 195,261	5/1963	McAuley .	
D. 196,050	8/1963	Finkel et al.	D26/14
D. 275,197	8/1984	Feagle	D14/86
D. 304,337	10/1989	Tai	D14/235
D. 305,766	1/1990	Tai	D14/231
D. 306,862	3/1990	Kent	D14/230
2,653,238	10/1945	Bainbridge	250/33.57

(List continued on next page.)

FOREIGN PATENT DOCUMENTS

1221694	7/1961	(DE)	46/6
1953595	10/1969	(DE)	48/2
0025739	8/1980	(EP)	25/2
2249668	5/1992	(GB)	19/19
57-154909	9/1982	(JP)	21/30
411486	1/1992	(JP)	H04N/7/20

Primary Examiner—Nguyen Vo
(74) *Attorney, Agent, or Firm*—Russell D. Culbertson; Shaffer & Culbertson, LLP

(57) **ABSTRACT**

A satellite receiving antenna (**16**) at a user location (**14**) receives satellite signals at a first frequency from a satellite (**12**). The satellite signals travel along a satellite signal route (**42**) within a look angle about the centerline (**28**) of the antenna (**16**). A terrestrial transmitter (**20**) transmits signals at the first frequency along a wireless transmission route (**40**) from the transmitter to the user location (**14**). The terrestrial transmitter (**20**) is located with respect to the user location (**14**) so that the wireless transmission route (**40**) is at a relatively large angle to the centerline (**28**) of the first antenna (**16**). The angle of the wireless transmission route (**40**) to the satellite antenna centerline (**28**) is large enough so that the terrestrial signals present at the location (**14**) result in terrestrial input signals from the antenna (**16**) which are less than an interference level with respect to satellite input signals produced by the antenna. Thus, the terrestrial signals do not interfere with the satellite signals even though they are transmitted at a common frequency.

20 Claims, 3 Drawing Sheets

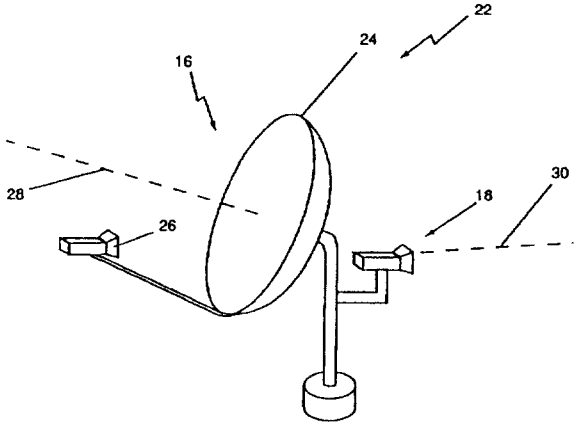

U.S. PATENT DOCUMENTS

4,097,708	6/1978	Bickel	219/10.55
4,198,639	4/1980	Killion	343/727
4,630,108	12/1986	Gomersall	358/84
5,038,151	8/1991	Kaminski	343/727
5,041,840	8/1991	Cipolla et al.	343/725
5,115,463	5/1992	Moldavsky	379/58
5,125,109	6/1992	Geller	455/313
5,276,904	1/1994	Mutzig et al.	455/3.2
5,374,938	12/1994	Hatazawa	343/756
5,394,561 *	2/1995	Freeburg	455/13.1
5,444,762 *	8/1995	Frey et al.	455/562
5,483,663 *	1/1996	Tawil	455/3.2
5,604,508 *	2/1997	Atkinson	343/879
5,761,605 *	6/1998	Tawil et al.	455/3.2

* cited by examiner

Figure 1

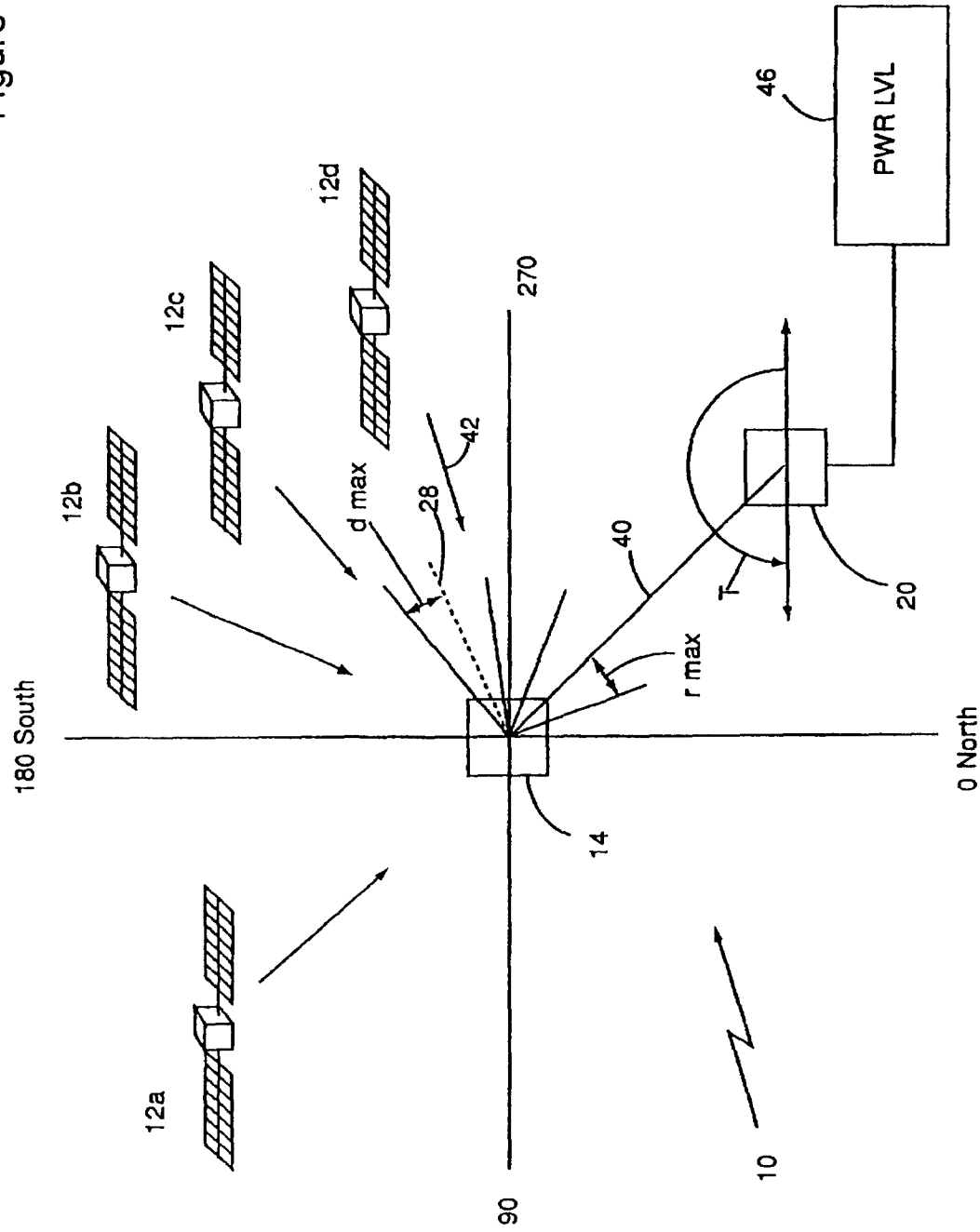
180 South
0 North
90
270
12a
12b
12c
12d
14
10
20
28
40
42
46
d max
r max
PWR LVL

Figure 2

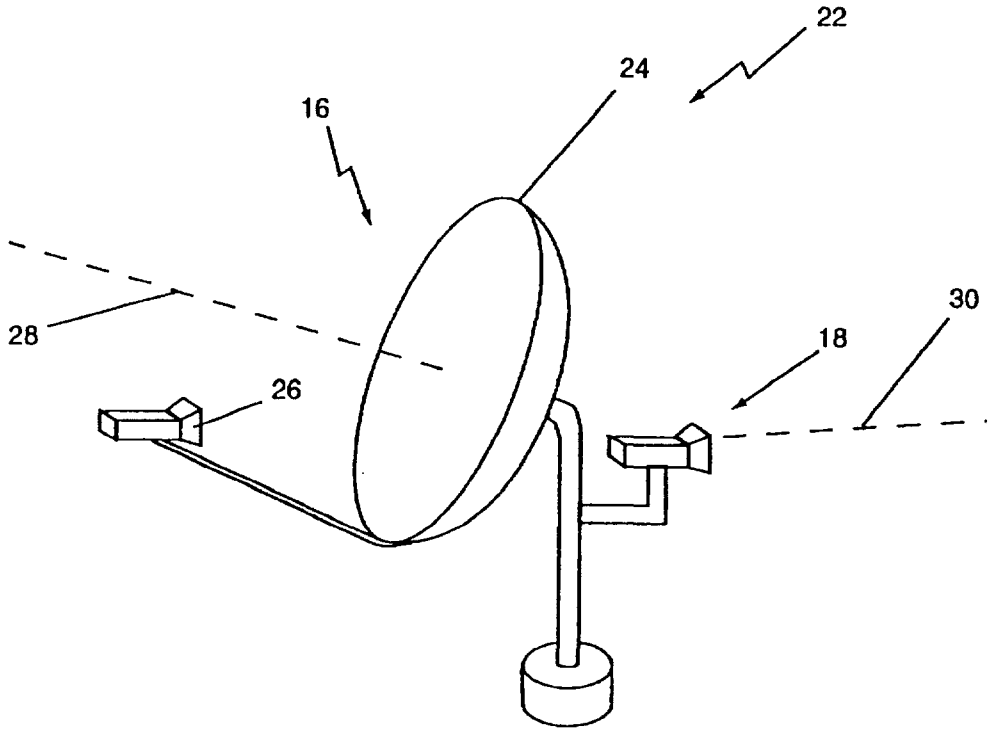

Figure 3

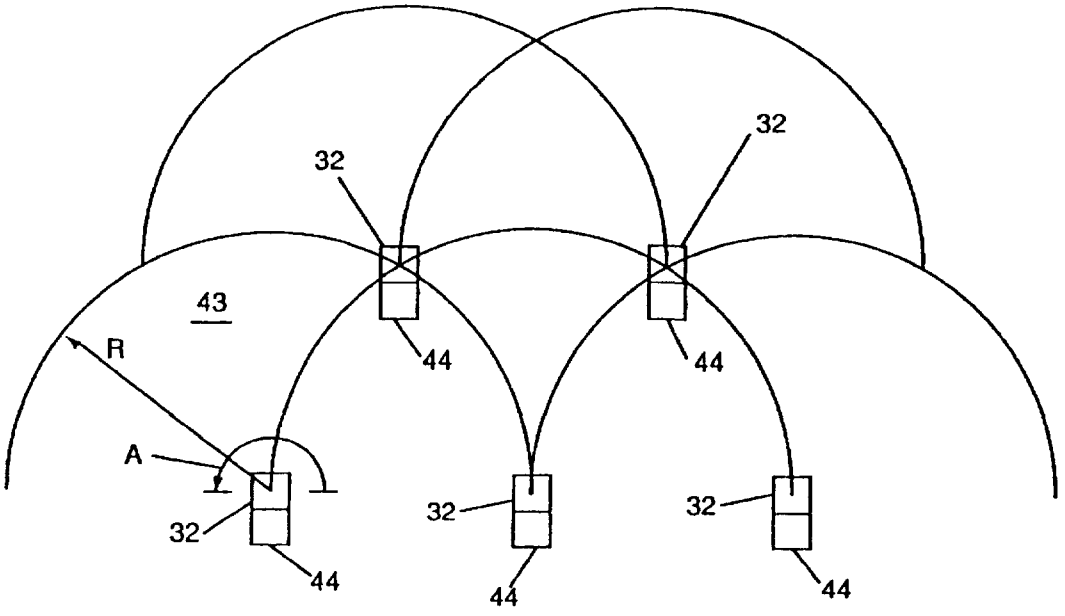

Figure 4

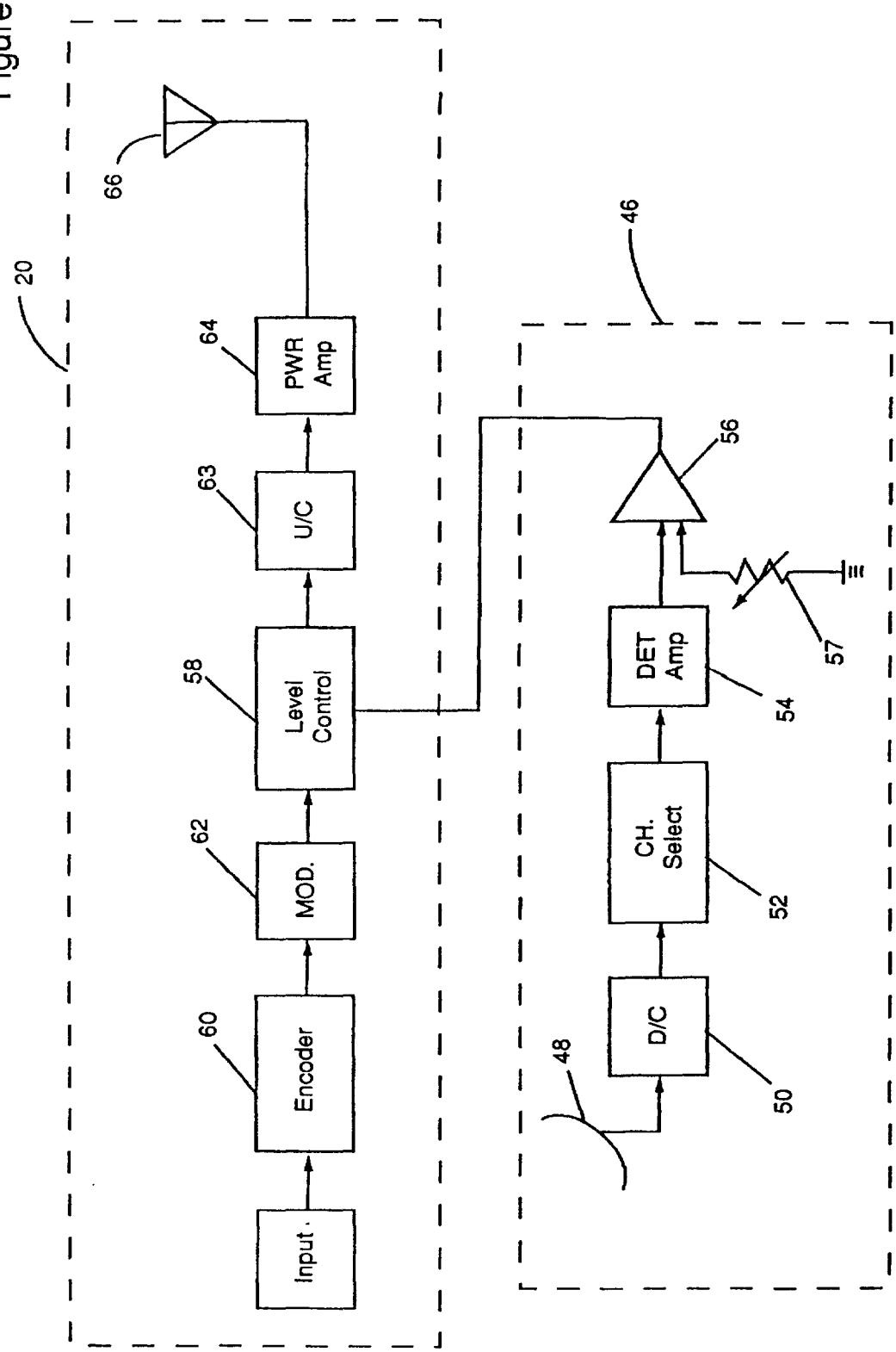
20
66
64
PWR Amp
63
U/C
58
Level Control
62
MOD.
60
Encoder
Input
46
56
DET Amp
54
57
CH. Select
52
D/C
50
48

APPARATUS AND METHOD FOR FACILITATING TERRESTRIAL TRANSMISSIONS AT FREQUENCIES ALSO USED FOR SATELLITE TRANSMISSIONS TO A COMMON GEOGRAPHIC AREA

This application is a continuation-in-part of application Ser. No. 08/731,244 filed Oct. 11, 1996, now U.S. Pat. No. 5,761,605.

BACKGROUND OF THE INVENTION

This invention relates to apparatus and methods for broadcasting and receiving data, including digital television signals, voice signals, and other data. More particularly, this invention relates to an apparatus and method for providing terrestrial transmissions simultaneously along with direct broadcast satellite transmissions on a common frequency and for setting the transmission power level for the terrestrial transmissions.

Currently, television signals may be received from a satellite in geosynchronous orbit about the earth. The television signals are transmitted from a terrestrial transmitter to the satellite, perhaps communicated between different satellites, and then retransmitted from a satellite so that the signals can be received by terrestrial receivers within a certain geographic receiving area within a line of sight of the satellite. In addition to television signals, other types of data may also be transmitted to consumers through satellites in either geosynchronous or non-geosynchronous orbit.

Direct broadcast satellite service (DBS) refers to satellite transmission of television signals and other data directly for use by individual households or subscribers having the proper signal receiving equipment. The U.S. Federal Communications Commission has dedicated the electromagnetic spectrum from 12.2 gigahertz to 12.7 gigahertz for DBS broadcasting. Numerous signal carriers are located within the DBS spectrum, each carrier carrying several individual television channels. Depending upon the compression technology applied to these signals, literally hundreds of separate channels may be available through DBS. A great benefit of the DBS system as opposed to prior satellite systems is that only a small dish-type antenna is required to receive the DBS signals and the alignment of the receiving dish is not as critical as earlier satellite broadcast systems. Also, the DBS system will provide high quality reception at any point in the geographic receiving area of a satellite without the expense of land transmission lines such as those required for cable television.

Current regulations require that DBS satellites be separated from each other by at least nine (9) degrees in a geosynchronous arc. The receiving antenna for DBS signals must, therefore, be limited to receiving signals in a directional range measuring plus or minus nine (9) degrees from a centerline of the antenna. Receiving signals in a range wider than the satellite spacing would cause interference by signals transmitted by different satellites on the same frequency. The limited directional reception range of the DBS receiving antenna is the result of the gain provided by the antenna being asymmetrical about the antenna structure. DBS signals reaching the DBS receiving antenna at angles outside of the directional range of the antenna receive insufficient gain to interfere with the desired DBS signals received within the antenna directional range.

U.S. Pat. No. 5,483,663 is directed to a system having a receiver arrangement in which DBS and terrestrial signals are received within similar frequency bands. The system

shown in the 5,483,663 Patent may be implemented with a multiple antenna arrangement, or with a single, moveable antenna. In the multiple antenna arrangement, two separate antennas direct the received signals to a common propagation path for processing as if they were received by a single antenna and transmitted from a single location. In the single antenna arrangement, the antenna is movable between a position to receive DBS signals and another position to receive terrestrial signals.

The advantage of the system shown in U.S. Pat. No. 5,483,663 is that local originating signals, whether carrying data for television or other data, may be received simultaneously with DBS signals, and processed with the same or similar equipment as that used to process the DBS signals. The local originating signals may carry local television programming which may be received along with the national or regional DBS television programming.

SUMMARY OF THE INVENTION

It is an object of the invention to provide terrestrially transmitted signals simultaneously with satellite transmitted signals at the same frequency. The invention includes an apparatus and method for use in transmitting terrestrial signals simultaneously with satellite signals transmitted at a common frequency.

The object of the invention is accomplished by transmitting terrestrial signals in a manner which ensures that they do not interfere with satellite signals transmitted at the same frequency. Embodiments of the invention may take advantage of receiving antennae having a limited directional reception range or look angle and may include transmitting the terrestrial signals in a different range of directions than those in which the satellite signals are transmitted. The power level at which the terrestrial signals are transmitted and the directional nature of the satellite receiving antennae ensure that the satellite transmitted signals can be discriminated from the terrestrially transmitted signals. Although the terrestrial signal transmission power is limited to a non-interfering transmission power level, the terrestrial transmission is still strong enough to produce a usable signal at a distant location.

Several different signals will be discussed in this disclosure. The term "satellite signals" refers to signals transmitted directly from a satellite, whereas the term "terrestrial signals" refers to signals transmitted directly from a terrestrial transmitter. "Satellite input signals" refers to signals resulting from satellite signals which have been picked up by an antenna and subjected to gain provided by the antenna. Finally, "terrestrial input signals" refers to signals resulting from terrestrial signals which have been picked up by an antenna and subjected to gain provided by the antenna.

The invention is employed in the situation in which satellite signals are transmitted at a satellite transmission frequency to a terrestrial location. The satellite signals travel along a satellite signal route from the satellite to the terrestrial location and to a satellite receiving antenna at the location for receiving the satellite signals. In some embodiments of the invention, the satellite receiving antenna is omni-directional, that is, provides generally the same gain regardless of the direction from which the signals reach the antenna. In other forms of the invention, the satellite receiving antenna has a directional reception characteristic in which the gain provided by the antenna reaches a peak along an antenna centerline and generally decreases as the angle from the centerline increases.

The omni-directional satellite receiving antenna need not be oriented in a particular direction to receive signals from