ATTACHMENT 3

NETWORK INTERCONNECTION

TABLE OF CONTENTS

1. Network Interconnection 4

2. Interconnection Trunk Group Architectures 5

3. Network Design And Management For Interconnection 13

4. Local Dialing Parity 16

5. Interconnection Compensation 16

6. Frame Relay Service Interconnection 22

7. Operational Support Systems (OSS) 25

Rates	Exhibit A
Basic Architecture	Exhibit B
One Way Architecture	Exhibit C
Two Way Architecture	Exhibit D
Supergroup Architecture	Exhibit E

NETWORK INTERCONNECTION

1. GENERAL

1.1 The Parties shall provide interconnection with each other's networks for the transmission and routing of telephone exchange service (local) and exchange access (intraLATA toll and switched access) on the following terms:

2. DEFINITIONS: (FOR THE PURPOSE OF THIS ATTACHMENT)

2.1 For purposes of this attachment only, the following terms shall have the definitions set forth below:

2.1.1 **Call Termination** has the meaning set forth for "termination" in 47CFR § 51.701(d).

2.1.2 **Call Transport** has the meaning set forth for "transport" in 47 CFR § 51.701(c).

2.1.3 **Call Transport and Termination** is used collectively to mean the switching and transport functions from the Interconnection Point to the last point of switching.

2.1.4 **Common (Shared) Transport** is defined as the transport of the originating Party's traffic by the terminating Party over the terminating Party's common (shared) facilities between (1) the terminating Party's tandem switch and end office switch, (2) between the terminating Party's tandem switches, and/or (3) between the terminating Party's host and remote end office switches. All switches referred herein must be entered into the Local Exchange Routing Guide ("LERG").

2.1.5 **Dedicated Interoffice Facility** is defined as a switch transport facility between a Party's Serving Wire Center and the first point of switching on the other Party's common (shared) network.

2.1.6 **End Office Switching** is defined as the function that establishes a communications path between the trunk side and line side of the End Office switch.

2.1.7 **Fiber Meet** is an interconnection arrangement whereby the Parties physically interconnect their networks via an optical fiber interface at which one Party's facilities, provisioning, and maintenance responsibility begins and the other Party's responsibility ends.

2.1.8 **Interconnection Point ("IP")** is the physical telecommunications equipment interface that performs the interconnection function for BellSouth and <customer_name>.

2.1.9 **Local Channel** is defined as a switched transport facility between a Party's Interconnection Point and it's the IP's Serving Wire Center.

2.1.10 **Local Traffic** is as defined in Section 5 of this Attachment.

2.1.11 **Serving Wire Center** is defined as the wire center owned by one Party from which the other Party would normally obtain dial tone for its IP.

2.1.12 **Tandem Switching** is defined as the function that establishes a communications path between two switching offices through a third switching office through the provision of trunk side to trunk side switching.

2.1.13 **Transit Traffic** is traffic originating on <customer_name>'s network that is switched and/or transported by BellSouth and delivered to a third party's network, or traffic originating on a third Party's network that is switched and/or transported by BellSouth and delivered to <customer_name>'s network.

3. NETWORK INTERCONNECTION

3.1 This Attachment pertains only to the provision of network interconnection where <customer_name> owns and provides its switch(es).

3.2 Network interconnection may be provided by the Parties at any technically feasible point within BellSouth's network. Requests to BellSouth for interconnection at points other than as set forth in this Attachment may be made through the Bona Fide Request/New Business Request process set out in this Agreement.

3.2.1 Each Party is responsible for providing, engineering and maintaining the network on its side of the IP. The IP must be located within BellSouth's serving territory in the LATA in which local traffic is originating. The IP determines the point at which the originating Party shall pay the terminating Party for the Call Transport and Termination of that traffic.

3.2.1.1 When first establishing the interconnection arrangement in each LATA, the location of the IP shall be established by mutual agreement of the Parties. In selecting the IP, both Parties will act in good faith and select the point which is most efficient for both Parties. If the Parties are unable to agree on the location of the IP, each Party will designate the Inform its originated traffic. Additional IP(s) in a particular LATA may be established by mutual agreement of the Parties. If the Parties are unable to agree to additional IPs, each Party will designate the IP for its originated traffic. When the Parties agree to utilize two-way interconnection trunk groups for the exchange of Local Traffic, the Parties must agree to the location of the IP(s).

3.3 Interconnection via Dedicated Facilities

3.3.1 **Local Channel Facilities.** As part of network interconnection, the originating Party may obtain Local Channel facilities from the terminating Party. The portion of Local Channel facilities utilized for Local Traffic shall be determined based upon the application of the Percent Local Facility (PLF) Factor. The charges applied to

the portion of the Local Channel used for Local Traffic as determined by the PLF are as set forth in Exhibit A to this Attachment.

3.3.2 **Dedicated Interoffice Facilities.** As a part of network interconnection, the originating Party may obtain Dedicated Interoffice Facilities. The portion of Dedicated Interoffice Facilities utilized for Local Traffic shall be determined based upon the application of the Percent Local Facility (PLF) Factor. The charges applied to the portion of the Dedicated Interoffice Facility used for Local Traffic as determined by the PLF are as set forth in Exhibit A to this Attachment.

3.4 **Fiber Meet**

3.4.1 If <customer_name> elects to interconnect with BellSouth pursuant to a Fiber Meet, <customer_name> and BellSouth shall jointly engineer, operate and maintain a Synchronous Optical Network ("SONET") transmission system by which they shall interconnect their transmission and routing of Local Traffic via a Local Channel at either the DS1 or DS3 level. The Parties shall work jointly to determine the specific transmission system. However, <customer_name>'s SONET transmission system must be compatible with BellSouth's equipment, and the Data Communications Channel (DCC) must be turned off.

3.4.2 Each Party, at its own expense, shall procure, install and maintain the agreed upon SONET transmission system in its network .

3.4.3 The Parties shall agree to a Fiber Meet point between the BellSouth Serving Wire Center and the <customer_name> Serving Wire Center. The Parties shall deliver their fiber optic facilities to the Fiber Meet point with sufficient spare length to reach the fusion splice point for the Fiber Meet Point. BellSouth shall, at its own expense, provide and maintain the fusion splice point for the Fiber Meet. A building type Common Language Location Identification ("CLLI") code will be established for each Fiber Meet point. All orders for interconnection facilities from the Fiber Meet point shall indicate the Fiber Meet point as the originating point for the facility .

3.4.4 Upon verbal request by <customer_name>, BellSouth shall allow <customer_name> access to the fusion splice point for the Fiber Meet point for maintenance purposes on <customer_name>'s side of the Fiber Meet point.

3.4.5 Neither Party shall charge the other for it's the Local Channel portion of the Fiber Meet facility used exclusively for Local Traffic . All the appropriate charges will apply. Charges for switched and special access services shall be billed in accordance with the applicable access service tariff.

4. INTERCONNECTION TRUNK GROUP ARCHITECTURES

4.1 BellSouth and <customer_name> shall establish interconnecting trunk groups and trunk group configurations between networks, including the use of one-way or

two-way trunks in accordance with the following provisions set forth in this Agreement. For trunking purposes, traffic will be routed based on the digits dialed by the originating end user and in accordance with the LERG.

4.2 <customer_name> shall establish an interconnection trunk group(s) to at least one BellSouth access tandem within the LATA for the delivery of <customer_name>'s originated Local Traffic and for the receipt and delivery of Transit Traffic. To the extent <customer_name> desires to deliver Local Traffic and/or Transit Traffic BellSouth access tandems within the LATA, other than the tandems(s) to which <customer_name> has established interconnection trunk groups , <customer_name> shall order Multiple Tandem Access, as described in this Attachment, to such other BellSouth access tandems.

4.2.1 Notwithstanding the forgoing, <customer_name> shall establish an interconnection trunk group(s) to all BellSouth access and local tandems in the LATA where <customer_name> has homed (i.e. assigned) its NPA/NXXs. <customer_name> shall home its NPA/NXXs on the BellSouth tandems that serve the exchange rate center areas to which the NPA/NXXs are assigned. The specified exchange rate center assigned to each BellSouth tandem is defined in the LERG. <customer_name> shall enter its NPA/NXX access and/or local tandem homing arrangements into the LERG.

4.3 Switched access traffic will be delivered to and from Interexchange Carriers (IXCs) based on <customer_name>'s NXX access tandem homing arrangement as specified by <customer_name> in the LERG.

4.4 Any <customer_name> interconnection request that (1) deviates from the interconnection trunk group architectures as described in this Agreement, (2) affects traffic delivered to <customer_name> from a BellSouth switch, and (3) requires special BellSouth switch translations and other network modifications will require <customer_name> to submit a Bona Fide Request/New Business Request (BFR/NBR) via the BFR/NBR Process as set forth in this Agreement.

4.5 Recurring and non-recurring rates associated with interconnecting trunk groups between BellSouth and <customer_name> are set forth in Exhibit A. To the extent a rate associated with the interconnecting trunk group is not set forth in Exhibit A, the rate shall be as set forth in the appropriate BellSouth tariff for switched access services.

4.6 For two-way trunk groups that carry only both Parties' Local Traffic , the Parties shall be compensated at 50% of the nonrecurring and recurring rates for dedicated trunks and facilities . <customer_name> shall be responsible for ordering and paying for any two-way trunks carrying Transit Traffic.

4.7 All trunk groups will be provisioned as Signaling System 7 (SS7) capable where technically feasible. If SS7 is not technically feasible multi-frequency (MF) protocol signaling shall be used.

4.8 In cases where <customer_name> is also an IXC, the IXC's Feature Group D (FG D) trunk group(s) must remain separate from the local interconnection trunk group(s).

4.9 Each Party shall order interconnection trunks and trunk group, including trunk and trunk group augmentations via the ASR process. A Firm Order Confirmation (FOC) shall be returned to the ordering Party, after receipt of a valid, error free ASR, within the timeframes set forth in Attachment 9 to this Agreement. Notwithstanding the foregoing, blocking situations and projects shall be managed through BellSouth's Local Interconnection Switching Center (LISC) Project Management Group and <customer_name>'s equivalent trunking group, and FOCs for such orders shall be returned in the timeframes applicable to the project. A project is defined as (1) a new trunk group or (2) a request for more than 96 trunks on a single or multiple group(s) in a given BellSouth local calling area.

4.10 **Interconnection Trunk Groups for Exchange of Local Traffic and Transit Traffic**

4.10.1 Upon mutual agreement of the Parties in a joint planning meeting, the Parties' shall exchange Local Traffic on two-way interconnection trunk group(s) with the quantity of trunks being mutually determined and the provisioning being jointly coordinated. Furthermore, the Parties shall agree upon the IP(s) for two-way interconnection trunk groups transporting both Parties Local Traffic . <customer_name> shall order such two-way trunks via the Access Service Request (ASR) process. . BellSouth will use the Trunk Group Service Request (TGSR) to request changes in trunking. Furthermore, the Parties shall jointly review trunk performance and forecasts on a periodic basis. The Parties use of two-way interconnection trunk groups for the transport of Local Traffic between the Parties does not preclude either Party from establishing additional one-way interconnection trunks for the delivery of its originated Local Traffic to the other Party.

4.10.2 **BellSouth Access Tandem Interconnection**

4.10.2.1 BellSouth access tandem interconnection at a single access tandem provides access to those end offices subtending that access tandem ("Intratandem Access"). Access tandem interconnection is available for any of the following access tandem architectures

4.10.2.2 **Basic Architecture**

4.10.2.2.1 In the basic architecture, <customer_name>'s originating Local Traffic and originating and terminating Transit Traffic is transported on a single two-way trunk group between <customer_name> and BellSouth access tandem(s) within a LATA to provide Intratandem Access. This trunk group carries Transit Traffic between <customer_name> and Independent Companies, Interexchange Carriers, other CLECs, CMRS providers that have a Meet Point Billing arrangement with BellSouth, and other network providers with which <customer_name> desires to exchange traffic. This trunk group also carries <customer_name> originated Transit Traffic transiting a single BellSouth access tandem destined to third party tandems such as an Independent Company tandem or other CLEC tandem. BellSouth originated Local Traffic is transported on a separate single one-way trunk group terminating to <customer_name>. Other trunk groups for operator services, directory assistance, emergency services and intercept must be established if service is requested. The LERG contains current routing and tandem serving arrangements. The basic Architecture is illustrated in Exhibit B.

4.10.2.3 **One-Way Trunk Group Architecture**

4.10.2.3.1 In one-way trunk group architecture, the Parties interconnect using three separate trunk groups. A one-way trunk group provides Intratandem Access for <customer_name>-originated Local Traffic destined for BellSouth end-users. A second one-way trunk group carries BellSouth-originated Local Traffic destined for <customer_name> end-users. A two-way trunk group provides Intratandem Access for <customer_name>'s originating and terminating Transit Traffic. This trunk group carries Transit Traffic between <customer_name> and Independent Companies, Interexchange Carriers, other CLECs, CMRS providers that have a Meet Point Billing arrangement with BellSouth, and other network providers with which <customer_name> desires to exchange traffic. This trunk group also carries <customer_name> originated Transit Traffic transiting a single BellSouth access tandem destined to third party tandems such as an Independent Company tandem or other CLEC tandem. BellSouth originated Local Traffic is transported on a separate single one-way trunk group terminating to <customer_name>. Other trunk groups for operator services, directory assistance, emergency services and intercept must be established if service is requested. The LERG contains current routing and tandem serving arrangements. The one-way trunk group architecture is illustrated in Exhibit C.

4.10.2.4 **Two-Way Trunk Group Architecture**

4.10.2.4.1 Upon agreement of the Parties as set forth in Section 4.10.1 above, the two-way trunk group Architecture establishes one two-way trunk group to provide Intratandem Access for the exchange of Local Traffic between <customer_name> and BellSouth. In addition, a separate two-way transit trunk group must be established for <customer_name>'s originating and terminating Transit Traffic. This trunk group carries Transit Traffic between <customer_name> and Independent Companies, Interexchange Carriers, other CLECs, CMRS providers

that have a Meet Point Billing arrangement with BellSouth, and other network providers with which <customer_name> desires to exchange traffic. This trunk group also carries <customer_name> originated Transit Traffic transiting a single BellSouth access tandem destined to third party tandems such as an Independent Company tandem or other CLEC tandem. BellSouth originated Local Traffic is transported on a separate single one-way trunk group terminating to <customer_name>. Other trunk groups for operator services, directory assistance, emergency services and intercept must be established if service is requested. The LERG contains current routing and tandem serving arrangements. The two-way trunk group architecture is illustrated in Exhibit D.

4.10.2.5 **Supergroup Architecture**

4.10.2.5.1 Upon agreement of the Parties as set forth in Section 4.10.1 above, the Parties may establish a supergroup architecture. In the supergroup architecture, the Parties' Local Traffic and <customer_name>'s Transit Traffic are exchanged on a single two-way trunk group between <customer_name> and BellSouth to provide Intratandem Access to <customer_name>. This trunk group carries Transit Traffic between <customer_name> and Independent Companies, Interexchange Carriers, other CLECs, CMRS providers that have a Meet Point Billing arrangement with BellSouth, and other network providers with which <customer_name> desires to exchange traffic. This trunk group also carries <customer_name> originated Transit Traffic transiting a single BellSouth access tandem destined to third party tandems such as an Independent Company tandem or other CLEC tandem. BellSouth originated Local Traffic is transported on a separate single one-way trunk group terminating to <customer_name>. Other trunk groups for operator services, directory assistance, emergency services and intercept must be established if service is requested. The LERG contains current routing and tandem serving arrangements. The supergroup architecture is illustrated in Exhibit D..

4.10.3 **Multiple Tandem Access Interconnection**

4.10.3.1 Where <customer_name> does not choose access tandem interconnection at every BellSouth access tandem within a LATA, <customer_name> may utilize BellSouth multiple tandem access interconnection (MTA). To utilize MTA <customer_name> must establish an interconnection trunk group(s) at a BellSouth access tandem through multiple BellSouth access tandems within the LATA as required. BellSouth will route <customer_name>'s originated Local Traffic for LATA wide transport and termination. <customer_name> must also establish an interconnection trunk group(s) at all BellSouth access tandems where <customer_name> NXXs are homed as described in Section 4.2.1 above. If <customer_name> does not have NXXs homed at any particular BellSouth access tandem within a LATA and elects not to establish an interconnection trunk group(s) at such BellSouth access tandem, <customer_name> can order MTA in each BellSouth access tandem within the LATA where it does have an interconnection trunk group(s) and BellSouth will terminate <customer_name>'s

Local Traffic to end-users served through those BellSouth access tandems where <customer_name> does not have an interconnection trunk group(s). MTA shall be provisioned in accordance with BellSouth's Ordering Guidelines.

4.10.3.2 <customer_name> may also utilize MTA to route its originated Transit Traffic; provided, however, that MTA may not be utilized to route switched access traffic that transits the BellSouth network to an Interexchange Carrier (IXC). Switched access traffic originated by or terminated to <customer_name> will be delivered to and from IXCs based on <customer_name>'s NXX access tandem homing arrangement as specified by <customer_name> in the LERG.

4.10.3.3 Compensation for MTA shall be at the applicable tandem switching and transport charges specified in Exhibit A to this Attachment and shall be billed in addition to any Call Transport and Termination charges.

4.10.3.4 To the extent <customer_name> does not purchase MTA in a LATA served by multiple access tandems, <customer_name> must establish an interconnection trunk group(s) to every access tandem in the LATA to serve the entire LATA. To the extent <customer_name> routes its traffic in such a way that utilizes BellSouth's MTA service without properly ordering MTA service, <customer_name> agrees to pay BellSouth the associated transport and termination charges.

4.10.4 **Local Tandem Interconnection**

4.10.4.1 Local Tandem Interconnection arrangement allows <customer_name> to establish an interconnection trunk group(s) at BellSouth local tandems for: (1) the delivery of <customer_name>-originated Local Traffic transported and terminated by BellSouth to BellSouth end offices within the local calling area as defined in BellSouth's General Subscriber Services Tariff (GSST), section A3 served by those BellSouth local tandems, and (2) for local Transit Traffic transported by BellSouth for third party network providers who have also established an interconnection trunk group(s) at those BellSouth local tandems.

4.10.4.2 When a specified local calling area is served by more than one BellSouth local tandem, <customer_name> must designate a "home" local tandem for each of its assigned NPA/NXXs and establish trunk connections to such local tandems. Additionally, <customer_name> may choose to establish an interconnection trunk group(s) at the BellSouth local tandems where it has no codes homing but is not required to do so. <customer_name> may deliver Local Traffic to a "home" BellSouth local tandem that is destined for other BellSouth or third party network provider end offices subtending other BellSouth local tandems in the same local calling area where <customer_name> does not choose to establish an interconnection trunk group(s). It is <customer_name>'s responsibility to enter its own NPA/NXX local tandem homing arrangements into the LERG either directly or via a vendor in order for other third party network providers to determine

appropriate traffic routing to <customer_name>'s codes. Likewise, <customer_name> shall obtain its routing information from the LERG.

4.10.4.3 Notwithstanding establishing an interconnection trunk group(s) to BellSouth's local tandems, <customer_name> must also establish an interconnection trunk group(s) to BellSouth access tandems within the LATA on which <customer_name> has NPA/NXXs homed for the delivery of Interexchange Carrier Switched Access (SWA) and toll traffic, and traffic to Type 2A CMRS connections located at the access tandems. BellSouth shall not switch SWA traffic through more than one BellSouth access tandem. SWA, Type 2A CMRS or toll traffic routed to the local tandem in error will not be backhauled to the BellSouth access tandem for completion. (Type 2A CMRS interconnection is defined in BellSouth's A35 General Subscriber Services Tariff).

4.10.4.4 BellSouth's provisioning of local tandem interconnection assumes that <customer_name> has executed the necessary Local Interconnection Agreements with the other third party network providers subtending those local tandems as required by the Act.

4.10.5 **Direct End Office-to-End Office Interconnection**

4.10.5.1 Direct End Office-to-End Office one-way or two-way interconnection trunk groups allow for the delivery of a Party's originating local or intraLATA toll traffic to the terminating Party on a direct end office-to-end office basis.

4.10.5.2 The Parties shall utilize direct end office-to-end office trunk groups under the following conditions:

4.10.5.2.1 (1) Tandem Exhaust - If a tandem through which the Parties are interconnected is unable to, or is forecasted to be unable to support additional traffic loads for any period of time, the Parties will mutually agree on an end office trunking plan that will alleviate the tandem capacity shortage and ensure completion of traffic between <customer_name> and BellSouth's subscribers.

4.10.5.2.2 (2) Traffic Volume –To the extent either Party has the capability to measure the amount of traffic between a <customer_name> switching center and a BellSouth end office, either Party shall install and retain direct end office trunking sufficient to handle actual or reasonably forecasted traffic volumes, whichever is greater, between a <customer_name> switching center and a BellSouth end office where the traffic exceeds or is forecasted to exceed a single DS1 of traffic per month. Either Party will install additional capacity between such points when overflow traffic between <customer_name>'s switching center and BellSouth's end office exceeds or is forecasted to exceed a single DS1 of traffic per month. In the case of one way trunking, additional trunking shall only be required by the Party whose trunking has achieved the preceding usage threshold.

4.10.5.2.3 (3) Mutual Agreement - The Parties may install direct end office trunking upon mutual agreement in the absence of conditions (1) or (2) above, and agreement will not unreasonably be withheld.

4.10.6 **Transit Traffic Trunk Group**

4.10.6.1 Transit Traffic trunks can either be two-way trunks or two one-way trunks ordered by <customer_name> to deliver and receive local and intraLATA toll Transit Traffic from third parties, such as Independent Companies and other CLECs, via BellSouth access tandems (or BellSouth local tandems for Local Traffic), and Switched Access traffic to and from Interexchange Carriers via BellSouth access tandems pursuant to the Transit Traffic section of this Attachment. Establishing Transit Traffic trunks at BellSouth access and local tandems provides intratandem access to the third parties also interconnected at those tandems.

4.10.6.2 **Toll Free Traffic**

4.10.6.2.1 If <customer_name> chooses BellSouth to handle Toll Free database queries from its switches, all <customer_name> originating Toll Free traffic will be routed over the Transit Traffic Trunk Group.

4.10.6.2.2 All originating Toll Free Service (Toll Free) calls for which <customer_name> requests that BellSouth perform the Service Switching Point ("SSP") function (i.e., perform the database query) shall be delivered using GR-394 format over the Transit Traffic Trunk Group. Carrier Code "0110" and Circuit Code (to be determined for each LATA) shall be used for all such calls.

4.10.6.2.3 <customer_name> may handle its own Toll Free database queries from its switch. If so, <customer_name> will determine the nature (local/intraLATA/interLATA) of the Toll Free call based on the response from the database. If the query determines that the call is a BellSouth local or intraLATA Toll Free number, <customer_name> will route the post-query local or IntraLATA converted ten-digit local number to BellSouth over the local or intraLATA trunk group. If the query determines that the call is a third party (ICO or other CLEC) local or intraLATA Toll Free number, <customer_name> will route the post-query local or intraLATA converted ten-digit local number to BellSouth over the Transit Traffic Trunk Group. In such case, <customer_name> is to provide a Toll Free billing record when appropriate. If the query reveals the call is an interLATA Toll Free number, <customer_name> will route the post-query interLATA call (Toll Free number) directly from its switch for carriers interconnected with its network or over the Transit Traffic Trunk Group to carriers not directly connected to its network but are connected to BellSouth's access tandem. Calls will be routed to BellSouth over the local/intraLATA and Transit Traffic Trunk Groups within the LATA in which the calls originate.

4.10.6.2.4 All post-query Toll Free Service (Toll Free) calls for which <customer_name> performs the SSP function, if delivered to BellSouth, shall be delivered using GR-394 format for calls destined to IXCs, and GR-317 format for calls destined to end offices that directly subtend the BellSouth access tandem.

5. NETWORK DESIGN AND MANAGEMENT FOR INTERCONNECTION

5.1 Network Management and Changes. Both Parties will work cooperatively with each other to install and maintain the most effective and reliable interconnected telecommunications networks, including but not limited to, the exchange of toll-free maintenance contact numbers and escalation procedures. Both Parties agree to provide public notice of changes in the information necessary for the transmission and routing of services using its local exchange facilities or networks, as well as of any other changes that would affect the interoperability of those facilities and networks.

5.2 Interconnection Technical Standards. The interconnection of all networks will be based upon accepted industry/national guidelines for transmission standards and traffic blocking criteria. Interconnecting facilities shall conform, at a minimum, to the telecommunications industry standard of DS-1 pursuant to Bellcore Standard No. TR-NWT-00499. Signal transfer point, Signaling System 7 ("SS7") connectivity is required at each interconnection point. BellSouth will provide out-of-band signaling using Common Channel Signaling Access Capability where technically and economically feasible, in accordance with the technical specifications set forth in the BellSouth Guidelines to Technical Publication, TR-TSV-000905. Facilities of each Party shall provide the necessary on-hook, off-hook answer and disconnect supervision and shall hand off calling number ID (Calling Party Number) when technically feasible.

5.3 Quality of Interconnection. The local interconnection for the transmission and routing of telephone exchange service and exchange access that each Party provides to each other will be at least equal in quality to what it provides to itself and any subsidiary or affiliate, where technically feasible, or to any other Party to which each Party provides local interconnection.

5.4 Network Management Controls. Both Parties will work cooperatively with each other to apply sound network management principles by invoking appropriate network management controls (e.g., call gapping) to alleviate or prevent network congestion.

5.5 Common Channel Signaling. Both Parties will provide LEC-to-LEC Common Channel Signaling ("CCS") to each other, where available, in conjunction with all traffic in order to enable full interoperability of CLASS features and functions except for call return. All CCS signaling parameters will be provided, including automatic number identification ("ANI"), originating line information ("OLI") calling company category, charge number, etc. All privacy indicators will be

honored, and each Party will cooperate with each other on the exchange of Transactional Capabilities Application Part ("TCAP") messages to facilitate full interoperability of CCS-based features between the respective networks. Neither Party shall alter the CCS parameters, or be a party to altering such parameters, or knowingly pass CCS parameters that have been altered in order to circumvent appropriate interconnection charges.

5.6 Signaling Call Information. BellSouth and <customer_name> will send and receive 10 digits for Local Traffic. Additionally, BellSouth and <customer_name> will exchange the proper call information, i.e. originated call company number and destination call company number, CIC, and OZZ, including all proper translations for routing between networks and any information necessary for billing.

5.7 **Forecasting for Trunk Provisioning**

5.7.1 Within six (6) months after execution of this agreement, <customer_name> shall provide an initial interconnection trunk group forecast for each LATA that it shall provide service within BellSouth's region. Upon receipt of <customer_name>'s forecast, the Parties shall schedule and participate in a joint planning meeting to develop a joint interconnection trunk group forecast. Each forecast provided under this Section shall be deemed "Confidential Information" under the General Terms and Conditions of this Agreement.

5.7.1.1 At a minimum, the forecast shall include the projected quantity of Transit Trunks, <customer_name>-to-BellSouth one-way trunks ("<customer_name> Trunks"), BellSouth-to-<customer_name> one-way trunks ("Reciprocal Trunks") and/or two-way interconnection trunks, if the Parties have agreed to interconnect using two-way trunking to transport the Parties' local and intraLATA toll. The quantities shall be projected for a minimum of six months in advance and shall include the current year plus next two years total forecasted quantities. Considering <customer_name>'s provided forecast, the Parties shall mutually develop Reciprocal Trunk and/or two-way interconnection trunk forecast quantities for the time periods listed and to be included within the initial forecast.

5.7.1.2 Additionally all forecasts shall include, at a minimum, Access Carrier Terminal Location ("ACTL"), trunk group type (local/intraLATA toll, Transit, Operator Services, 911, etc.), A location/Z location (CLLI codes for <customer_name> location and BellSouth location where the trunks shall terminate), interface type (e.g., DS1), Direction of Signaling, Trunk Group Number, if known, (commonly referred to as the 2-6 code) and forecasted trunks in service each year (cumulative).

5.7.2 Each Party shall exercise its best efforts to provide the quantity of interconnection trunks mutually forecasted. However, the provision of the forecasted quantity of interconnection trunks is subject to trunk terminations and facility capacity existing at the time the trunk order is submitted. Furthermore, the receipt and development

of trunk forecasts does not imply any liability for failure to perform if capacity (trunk terminations or facilities) is not available for use at the forecasted time.

5.7.3 The submitting and development of interconnection trunk forecasts shall not replace the ordering process in place for local interconnection trunks.

5.7.4 Once initial interconnection trunk forecasts have been developed, <customer_name> shall continue to provide interconnection trunk forecasts on a semiannual basis or at otherwise mutually agreeable intervals. <customer_name> shall use its best efforts to make the forecasts as accurate as possible based on reasonable engineering criteria. Interconnection trunk forecasts shall be updated and provided to BellSouth on an as needed basis, but no less frequently than semiannually and no more frequently than monthly. Upon receipt of <customer_name>'s forecast, including forecast updates, the Parties shall confer to mutually develop BellSouth Reciprocal Trunk and/or two-way interconnection trunk forecasted quantities for the listed time periods within such subsequent forecasts.

5.8 **Trunk Utilization**

5.8.1 BellSouth and <customer_name> shall monitor traffic on each interconnection trunk group that is installed pursuant to the initial interconnection trunk requirements and subsequent forecasts. At any time after the end of a calendar quarter, based on a review of the capacity utilization during such quarter for installed reciprocal trunk groups and/or two-way interconnection trunk groups, subject to the provisions of the section following, BellSouth may disconnect any non-utilized or under-utilized reciprocal trunk(s) and <customer_name> shall refund to BellSouth any associated trunk and facility charges paid by BellSouth. BellSouth may request <customer_name> to disconnect any under-utilized two-way interconnection trunk(s), if BellSouth has determined that the trunk group is not being utilized at eighty-five percent (85%) of the time consistent busy hour utilization level, provided that the Parties have not otherwise agreed. <customer_name> shall comply with all such requests, subject to Section 3.8.1.1 below. Under-utilized trunks are defined as the trunks being utilized at less than 85% as a result of a time consistent busy hour utilization.

5.8.1.1 BellSouth's LISC will notify the <customer_name> of any under-utilized reciprocal trunk groups and the number of trunks that BellSouth wishes to disconnect. BellSouth will provide supporting information either by email or facsimile to the designated <customer_name> interface. <customer_name> will provide concurrence with the disconnection in seven (7) business days or will provide specific information supporting why the trunks should not be disconnected. Such supporting information should include expected Local Number Ported (LNP) and traffic volumes and the timeframes within which <customer_name> expects to need such trunks. BellSouth's LISC Project Manager and Circuit Capacity Manager will discuss the information with

<customer_name> to determine if agreement can be reached on the number of trunks to be removed. If no agreement can be reached, BellSouth will issue disconnect orders to <customer_name>. The due date of these orders will be four weeks after <customer_name> was first notified in writing of the underutilization of the trunk groups.

5.8.1.2 <customer_name> monitors all direct trunks from <customer_name> to BellSouth. If <customer_name> wishes to disconnect any such trunks, <customer_name> shall issue an ASR to do so.

5.8.2 To the extent that any interconnection trunk group is utilized at a time-consistent busy hour of eighty-five percent (85%) or greater, the Parties shall negotiate in good faith for the installation of augmented facilities.

6. LOCAL DIALING PARITY

6.1 BellSouth and <customer_name> shall provide local and toll dialing parity to each other with no unreasonable dialing delays. Dialing parity shall be provided for all originating telecommunications services that require dialing to route a call. BellSouth and <customer_name> shall permit similarly situated telephone exchange service end users to dial the same number of digits to make a local telephone call notwithstanding the identity of the end user's or the called party's telecommunications service provider.

7. INTERCONNECTION COMPENSATION

7.1 Compensation for Call Transportation and Termination for Local Traffic

7.1.1 For reciprocal compensation between the Parties pursuant to this Attachment, Local Traffic is defined as any circuit switched call that is originated by an end user of one Party and terminated to an end user of the other Party within a given LATA on that other Party's network, except for those calls that are originated or terminated through switched access arrangements as established by the ruling regulatory body.

7.1.1.1 Additionally, Local Traffic includes any cross boundary, voice-to-voice intrastate, interLATA or interstate, interLATA calls established as a local call by the ruling regulatory body.

7.1.2 ISP-bound Traffic is defined as calls to an information service provider or Internet service provider ("ISP") that are dialed by using a local dialing pattern (7 or 10 digits) by a calling party in one exchange or local calling area to an ISP server or modem in the same exchange or local calling area. ISP-bound Traffic is not considered Local Traffic subject to reciprocal compensation, but instead is information traffic subject to interstate access.

7.1.3 Neither Party shall pay compensation to the other Party for the transportation and termination of Local Traffic or ISP-bound Traffic.

7.1.4 The elemental rates set forth in Exhibit A of this Attachment shall apply for Transit Traffic as described in Sections 7.9 and 7.9.1 below.

7.1.5 Neither Party shall represent Switched Access Traffic as Local Traffic or ISP-bound Traffic for purposes of payment of reciprocal compensation.

7.1.6 If <customer_name> assigns NPA/NXXs to specific BellSouth rate centers within the LATA and assigns numbers from those NPA/NXXs to <customer_name> end users physically located outside of that LATA, BellSouth traffic originating from within the LATA where the NPA/NXXs are assigned and delivered to a <customer_name> customer physically located outside of such LATA, shall not be deemed Local Traffic, and no compensation from BellSouth to <customer_name> shall be due therefor. Further, <customer_name> agrees to identify such interLATA traffic to BellSouth and to compensate BellSouth for originating and transporting such interLATA traffic to <customer_name> at BellSouth's switched access tariff rates.

7.2 If <customer_name> does not identify such interLATA traffic to BellSouth, to the best of BellSouth's ability BellSouth will determine which whole <customer_name> NPA/NXXs on which to charge the applicable rates for originating network access service as reflected in BellSouth's Access Service Tariff. BellSouth shall make appropriate billing adjustments if <customer_name> can provide sufficient information for BellSouth to determine whether or not said traffic is Local Traffic.

7.3 **Percent Local Use.** Each Party shall report to the other a Percent Local Usage ("PLU"). The application of the PLU will determine the amount of local minutes to be billed to the other Party. For purposes of developing the PLU, each Party shall consider every local call and every long distance call, excluding Transit Traffic. Each Party shall update its PLU on the first of January, April, July and October of the year and shall send it to the other Party to be received no later than 30 calendar days after the first of each such month based on local usage for the past three months ending the last day of December, March, June and September, respectively. Requirements associated with PLU calculation and reporting shall be as set forth in BellSouth's Jurisdictional Factors Reporting Guide, as it is amended from time to time. Notwithstanding the foregoing, where the terminating Party has message recording technology that identifies the jurisdiction of traffic terminated as defined in this Agreement, such information, in lieu of the PLU factor, shall at the terminating Party's option be utilized to determine the appropriate local usage compensation to be paid.

7.4 **Percent Local Facility.** Each Party shall report to the other a Percent Local Facility ("PLF"). The application of the PLF will determine the portion of switched

dedicated transport to be billed per the local jurisdiction rates. The PLF shall be applied to Multiplexing, Local Channel and Interoffice Channel Switched Dedicated Transport utilized in the provision of local interconnection trunks. Each Party shall update its PLF on the first of January, April, July and October of the year and shall send it to the other Party to be received no later than 30 calendar days after the first of each such month to be effective the first bill period the following month, respectively. Requirements associated with PLU and PLF calculation and reporting shall be as set forth in BellSouth's Jurisdictional Factors Reporting Guide, as it is amended from time to time.

7.5 **Percent Interstate Usage.** Each Party shall report to the other the projected Percent Interstate Usage ("PIU"). All jurisdictional report requirements, rules and regulations for Interexchange Carriers specified in BellSouth's Intrastate Access Services Tariff will apply to <customer_name>. After interstate and intrastate traffic percentages have been determined by use of PIU procedures, the PLU and PLF factors will be used for application and billing of local interconnection. Each Party shall update its PIUs on the first of January, April, July and October of the year and shall send it to the other Party to be received no later than 30 calendar days after the first of each such month, for all services showing the percentages of use (PIUs, PLU, and PLF) for the past three months ending the last day of December, March, June and September. Notwithstanding the foregoing, where the terminating Party has message recording technology that identifies the jurisdiction of traffic terminated as defined in this Agreement, such information, in lieu of the PIU and PLU factors, shall at the terminating Party's option be utilized to determine the appropriate local usage compensation to be paid.

7.6 **Audits.** On thirty (30) days written notice, each Party must provide the other the ability and opportunity to conduct an annual audit to ensure the proper billing of traffic. BellSouth and <customer_name> shall retain records of call detail for a minimum of nine months from which a PLU, PLF and/or PIU can be ascertained. The audit shall be accomplished during normal business hours at an office designated by the Party being audited. Audit requests shall not be submitted more frequently than one (1) time per calendar year. Audits shall be performed by a mutually acceptable independent auditory paid for by the Party requesting the audit. The PLU and/or PIU shall be adjusted based upon the audit results and shall apply to the usage for the quarter the audit was completed, to the usage for the quarter prior to the completion of the audit, and to the usage for the two quarters following the completion of the audit. If, as a result of an audit, either Party is found to have overstated the PLU and/or PIU by twenty percentage points (20%) or more, that Party shall reimburse the auditing Party for the cost of the audit.

7.7 **Compensation for 8XX Traffic**

7.7.1 Compensation for 8XX Traffic. Each Party shall compensate the other pursuant to the appropriate switched access charges, including the database query charge as set forth in the BellSouth intrastate or interstate switched access tariffs.

7.7.2 Records for 8XX Billing. Each Party will provide to the other the appropriate records necessary for billing intraLATA 8XX customers. The records provided will be in a standard EMI format.

7.7.3 8XX Access Screening. BellSouth's provision of 8XX TFD to <customer_name> requires interconnection from <customer_name> to BellSouth 8XX SCP. Such interconnections shall be established pursuant to BellSouth's Common Channel Signaling Interconnection Guidelines and Bellcore's CCS Network Interface Specification document, TR-TSV-000905. <customer_name> shall establish CCS7 interconnection at the BellSouth Local Signal Transfer Points serving the BellSouth 8XX SCPs that <customer_name> desires to query. The terms and conditions for 8XX TFD are set out in BellSouth's Intrastate Access Services Tariff as amended.

7.8 **Mutual Provision of Switched Access Service**

7.8.1 Switched Access Traffic. Switched Access Traffic is described in the BellSouth Access Tariff. Additionally, any Public Switched Telephone Network interexchange telecommunications traffic, regardless of transport protocol method, where the originating and terminating points, end-to-end points, are in different LATAs, or are in the same LATA and the Parties' Switched Access services are used for the origination or termination of the call, shall be considered Switched Access Traffic. Irrespective of transport protocol method used, a call which originates in one LATA and terminates in another LATA (i.e., the end-to-end points of the call) or in which the Parties' Switched Access Services are used for the origination or termination of the call, shall not be compensated as local.

7.8.2 If the BellSouth end user chooses <customer_name> as their presubscribed interexchange carrier, or if the BellSouth end user uses <customer_name> as an interexchange carrier on a 101XXXX basis, BellSouth will charge <customer_name> the appropriate BellSouth tariff charges for originating switched access services

7.8.3 For originating or terminating switched access traffic on the other company's network, the originating Party will pay the terminating Party BellSouth's current intrastate or interstate, whichever is appropriate, switched access tariff rates as set forth in BellSouth's Intrastate or Interstate Access Services Tariff..

7.8.4 When <customer_name>'s end office switch, subtending the BellSouth Access Tandem switch for receipt or delivery of switched access traffic, provides an access service connection to or from an interexchange carrier ("IXC") by either a direct trunk group to the IXC utilizing BellSouth facilities, or via BellSouth's tandem switch, each Party will provide its own access services to the IXC and bill on a multi-bill, multi-tariff meet-point basis. Each Party will bill its own access services rates to the IXC with the exception of the interconnection charge. The interconnection charge will be billed by the Party providing the end office function.

Each party will use the Multiple Exchange Carrier Access Billing (MECAB) guidelines to establish meet point billing for all applicable traffic. Thirty (30)-day billing periods will be employed for these arrangements. For tandem routed traffic, the tandem company agrees to provide to the Initial Billing Company as defined in MECAB, at no charge, all the switched access detail usage data, recorded at the access tandem, within no more than sixty (60) days after the recording date. The Initial Billing Company will provide the switched access summary usage data, for all originating and terminating traffic, to all Subsequent Billing Companies as defined in MECAB within 10 days of rendering the initial bill to the IXC. Each Party will notify the other when it is not feasible to meet these requirements so that the customers may be notified for any necessary revenue accrual associated with the significantly delayed recording or billing. As business requirements change data reporting requirements may be modified as necessary.

7.8.5 In the event that either Party fails to provide the appropriate MECAB switched access usage data to the other Party within 90 days after the recording date and the receiving Party is unable to bill and/or collect access revenues due to the sending Party's failure to provide such data within said time period, then the Party failing to send the data as specified herein shall be liable to the other Party in an amount equal to the unbillable or uncollectible revenues. Each company will provide complete documentation to the other to substantiate any claim of unbillable switched access revenues, and a negotiated settlement will be agreed upon between the Parties.

7.8.6 Each Party will retain for a minimum period of sixty (60) days, access message detail sufficient to recreate any data which is lost or damaged by their company or any third party involved in processing or transporting data.

7.8.7 Each Party agrees to recreate the lost or damaged data within forty-eight (48) hours of notification by the other or by an authorized third party handling the data.

7.8.8 Each Party also agrees to process the recreated data within forty-eight (48) hours of receipt at its data processing center.

7.8.9 All claims should be filed with the other Party within 120 days of the receipt of the date of the unbillable usage.

7.8.10 The Initial Billing Company shall keep records of its billing activities relating to jointly-provided Intrastate and Interstate access services in sufficient detail to permit the Subsequent Billing Party to, by formal or informal review or audit, to verify the accuracy and reasonableness of the jointly-provided access billing data provided by the Initial Billing Party. Each Party agrees to cooperate in such formal or informal reviews or audits and further agrees to jointly review the findings of such reviews or audits in order to resolve any differences concerning the findings thereof.

7.8.11 <customer_name> agrees not to deliver switched access traffic to BellSouth for termination except over <customer_name> ordered switched access trunks and facilities.

7.9 **Transit Traffic**

7.9.1 BellSouth shall provide tandem switching and transport services for <customer_name>'s Transit Traffic. Rates for local Transit Traffic shall be the applicable Call Transport and Termination charges as set forth in Exhibit A to this Attachment. Rates for Switched Access Transit Traffic shall be the applicable charges as set forth in BellSouth Interstate or Intrastate Switched Access tariffs. Switched Access Transit Traffic presumes that <customer_name>'s end office is subtending the BellSouth Access Tandem for switched access traffic to and from <customer_name>'s end users utilizing BellSouth facilities, either by direct trunks with the IXC, or via the BellSouth Access Tandem. Billing associated with all Transit Traffic shall be pursuant to MECAB guidelines. Pursuant to these guidelines, the Initial Billing Company shall provide summary usage data, for all originating and terminating Transit Traffic, to all Subsequent Billing Companies. Traffic between <customer_name> and Wireless Type 1 third parties shall not be treated as Transit Traffic from a routing or billing perspective. Traffic between <customer_name> and Wireless Type 2A or UNE-CLEC third parties shall not be treated as Transit Traffic from a routing or billing perspective until BellSouth and the Wireless carrier or UNE-CLEC third party have the capability to properly meet-point-bill in accordance with MECAB guidelines.

7.9.2 In the event that either Party fails to provide the appropriate MECAB usage data to the other Party within 90 days after the recording date and the receiving Party is unable to bill and/or collect Transit Traffic revenues due to the sending Party's failure to provide such data within said time period, then the Party failing to send the data as specified herein shall be liable to the other Party in an amount equal to the unbillable or uncollectible revenues. Each company will provide complete documentation to the other to substantiate any claim of unbillable revenues and a negotiated settlement will be agreed upon between the Parties

7.9.3 The delivery of traffic which transits the BellSouth network and is transported to another carrier's network is excluded from any BellSouth billing guarantees and will be delivered at the rates stipulated in this Agreement to a terminating carrier. BellSouth agrees to deliver this traffic to the terminating carrier; provided, however, that <customer_name> is solely responsible for negotiating and executing any appropriate contractual agreements with the terminating carrier for the receipt of this traffic through the BellSouth network. BellSouth will not be liable for any compensation to the terminating carrier or to <customer_name>. <customer_name> agrees to compensate BellSouth for any charges or costs for the delivery of Transit Traffic to a connecting carrier on behalf of <customer_name>. Additionally, the Parties agree that any billing to a third party

or other telecommunications carrier under this section shall be pursuant to MECAB procedures.

8. FRAME RELAY SERVICE INTERCONNECTION

8.1 In addition to the Local Interconnection services set forth above, BellSouth will offer a network to network Interconnection arrangement between BellSouth's and <customer_name>'s frame relay switches as set forth below. The following provisions will apply only to Frame Relay Service and Exchange Access Frame Relay Service in those states in which <customer_name> is certified and providing Frame Relay Service as a Local Exchange Carrier and where traffic is being exchanged between <customer_name> and BellSouth Frame Relay Switches in the same LATA.

8.2 The Parties agree to establish two-way Frame Relay facilities between their respective Frame Relay Switches to the mutually agreed upon Frame Relay Service point(s) of interconnection ("IP(s)") within the LATA. All IPs shall be within the same Frame Relay Network Serving Areas as defined in Section A40 of BellSouth's General Subscriber Service Tariff except as set forth in this Attachment.

8.3 Upon the request of either Party, such interconnection will be established where BellSouth and <customer_name> have Frame Relay Switches in the same LATA. Where there are multiple Frame Relay switches in one central office, an interconnection with any one of the switches will be considered an interconnection with all of the switches at that central office for purposes of routing packet traffic.

8.4 The Parties agree to provision local and intraLATA Frame Relay Service and Exchange Access Frame Relay Service (both intrastate and interstate) over Frame Relay interconnection facilities between the respective Frame Relay switches and the IPs.

8.5 The Parties agree to assess each other reciprocal charges for the facilities that each provides to the other according to the Percent Local Circuit Use Factor (PLCU), determined as follows:

8.5.1 If the data packets originate and terminate in locations in the same LATA, and consistent with the local definitions of the Agreement, the traffic is considered local. Frame Relay framed packet data is transported within Virtual Circuits (VC). For the purposes of this Agreement, if all the data packets transported within a VC remain within the LATA, then consistent with the local definitions in this Agreement, the traffic on that VC is local ("Local VC").

8.5.2 If the originating and terminating locations of the two-way packet data traffic are not in the same LATA, the traffic on that VC is interLATA ("InterLATA VC").

8.5.3 The PLCU is determined by dividing the total number of Local VCs, by the total number of VCs on each Frame Relay facility. To facilitate implementation, <customer_name> may determine its PLCU in aggregate, by dividing the total number of Local VCs in a given LATA by the total number VCs in that LATA. The Parties agree to renegotiate the method for determining PLCU, at BellSouth's request, and within 90 days, if BellSouth notifies <customer_name> that it has found that this method does not adequately represent the PLCU.

8.5.4 If there are no VCs on a facility when it is billed, the PLCU will be zero.

8.5.5 BellSouth will provide the circuit between the Parties' respective Frame Relay Switches. The Parties will be compensated as follows: BellSouth will invoice, and <customer_name> will pay, the total non-recurring and recurring charges for the circuit based upon the rates set forth in BellSouth's Interstate Access Tariff, FCC No. 1. <customer_name> will then invoice, and BellSouth will pay, an amount calculated by multiplying the BellSouth billed charges for the circuit by one-half of <customer_name>'s PLCU.

8.6 The Parties agree to compensate each other for Frame Relay network-to-network interface (NNI) ports based upon the NNI rates set forth in BellSouth's Interstate Access Tariff, FCC No. 1 Compensation for each pair of NNI ports will be calculated as follows: BellSouth will invoice, and <customer_name> will pay, the total non-recurring and recurring charges for the NNI port. <customer_name> will then invoice, and BellSouth will pay, an amount calculated by multiplying the BellSouth billed non-recurring and recurring charges for the NNI port by <customer_name>'s PLCU.

8.7 Each Party agrees that there will be no charges to the other Party for its own subscriber's Permanent Virtual Circuit (PVC) rate elements for the local PVC segment from its Frame Relay switch to its own subscriber's premises. PVC rate elements include the Data Link Connection Identifier (DLCI) and Committed Information Rate (CIR).

8.8 For the PVC segment between the <customer_name> and BellSouth Frame Relay switches, compensation for the PVC charges is based upon the rates in BellSouth's Interstate Access Tariff, FCC No. 1.

8.9 Compensation for PVC rate elements will be calculated as follows:

8.9.1 If <customer_name> orders a VC connection between a BellSouth subscriber's PVC segment and a PVC segment from the BellSouth Frame Relay switch to the <customer_name> Frame Relay switch, BellSouth will invoice, and <customer_name> will pay, the total non-recurring and recurring PVC charges for the PVC segment between the BellSouth and <customer_name> Frame Relay switches. If the VC is a Local VC, <customer_name> will then invoice and BellSouth will pay, the total nonrecurring and recurring PVC charges billed for

that segment. If the VC is not local, no compensation will be paid to <customer_name> for the PVC segment.

8.9.2 If BellSouth orders a Local VC connection between a <customer_name> subscriber's PVC segment and a PVC segment from the <customer_name> Frame Relay switch to the BellSouth Frame Relay switch, BellSouth will invoice, and <customer_name> will pay, the total non-recurring and recurring PVC and CIR charges for the PVC segment between the BellSouth and <customer_name> Frame Relay switches. If the VC is a Local VC, <customer_name> will then invoice and BellSouth will pay the total non-recurring and recurring PVC and CIR charges billed for that segment. If the VC is not local, no compensation will be paid to <customer_name> for the PVC segment.

8.9.3 The Parties agree to compensate each other for requests to change a PVC segment or PVC service order record, according to the Feature Change charge as set forth in the BellSouth access tariff BellSouth Tariff FCC No. 1.

8.9.4 If <customer_name> requests a change, BellSouth will invoice and <customer_name> will pay a Feature Change charge for each affected PVC segment.

8.9.4.1 If BellSouth requests a change to a Local VC, <customer_name> will invoice and BellSouth will pay a Feature Change charge for each affected PVC segment.

8.9.5 The Parties agree to limit the sum of the CIR for the VCs on a DS1 NNI port to not more than three times the port speed, or not more than six times the port speed on a DS3 NNI port.

8.9.6 Except as expressly provided herein, this Agreement does not address or alter in any way either Party's provision of Exchange Access Frame Relay Service or interLATA Frame Relay Service. All charges by each Party to the other for carriage of Exchange Access Frame Relay Service or interLATA Frame Relay Service are included in the BellSouth access tariff BellSouth Tariff FCC No. 1.

8.10 <customer_name> will identify and report quarterly to BellSouth the PLCU of the Frame Relay facilities it uses, per section 6.5.3 above.

8.11 Either Party may request a review or audit of the various service components, consistent with the provisions of section E2 of the BellSouth State Access Services tariffs or Section 2 of the BellSouth FCC No.1 Tariff.

8.12 If during the term of this Agreement, BellSouth obtains authority to provide interLATA Frame Relay in any State, the Parties agree to renegotiate this arrangement for the exchange of Frame Relay Service Traffic within one hundred eighty (180) days of the date BellSouth receives interLATA authority. In the event the Parties fail to renegotiate this Section 6 within the one hundred eighty

day period, they will submit this matter to the appropriate State commission(s) for resolution.

9. OPERATIONAL SUPPORT SYSTEMS (OSS)

9.1 The terms, conditions and rates for OSS are as set forth in FCC Tariff No., for Access Service Records.

Exhibit B

Basic Architecture

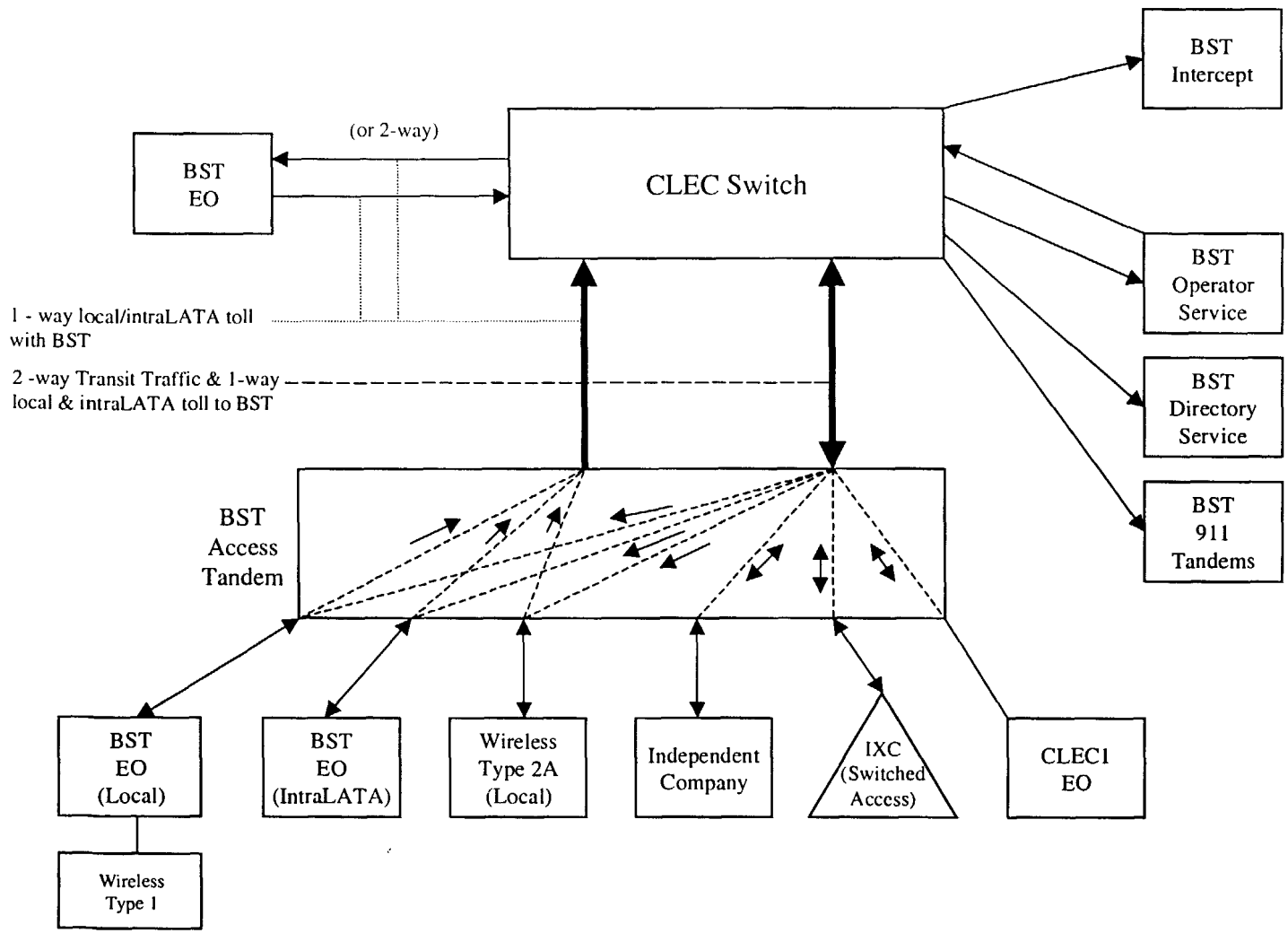

Exhibit C

One-Way Architecture

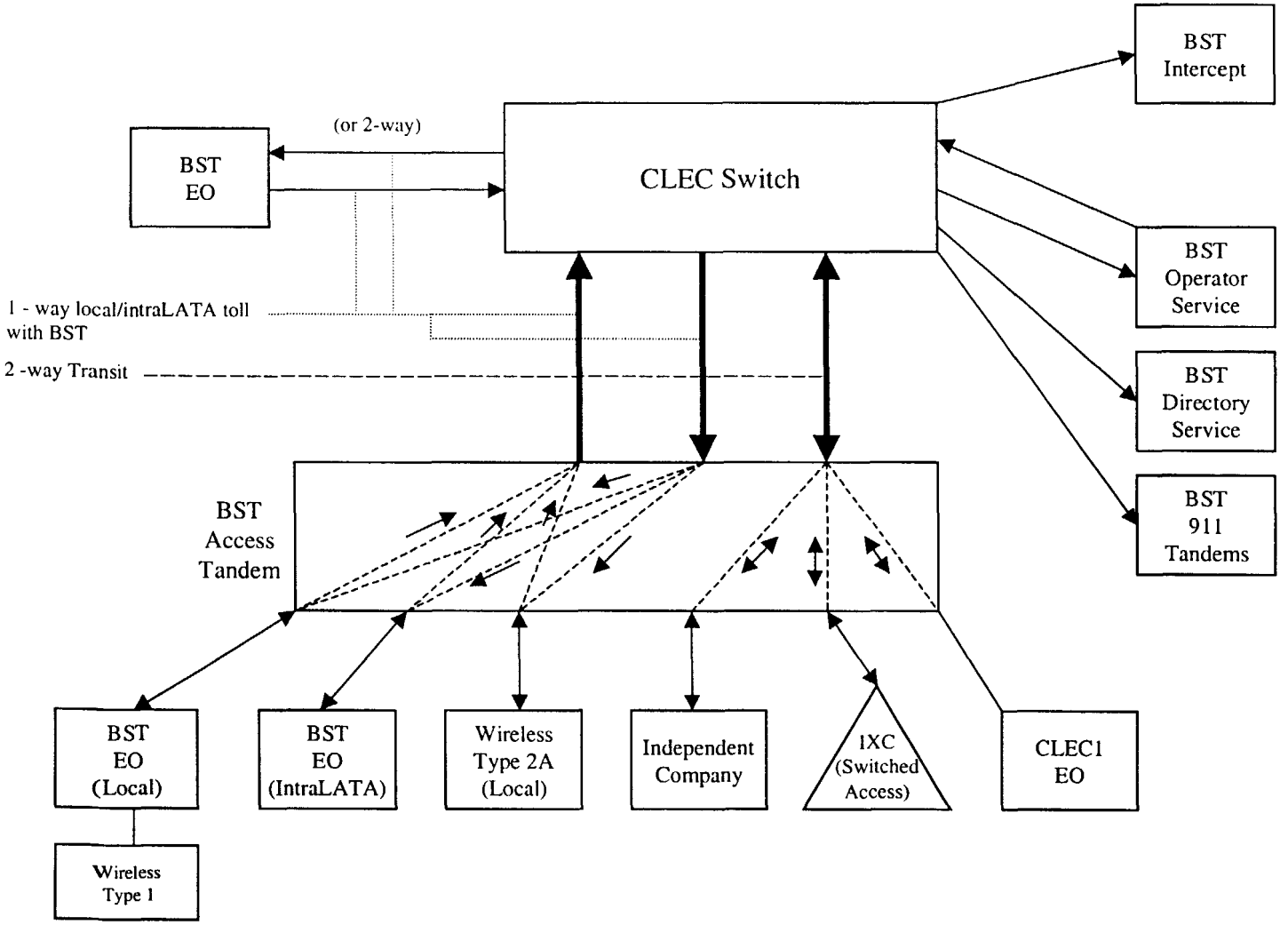

Exhibit D

Two-Way Architecture

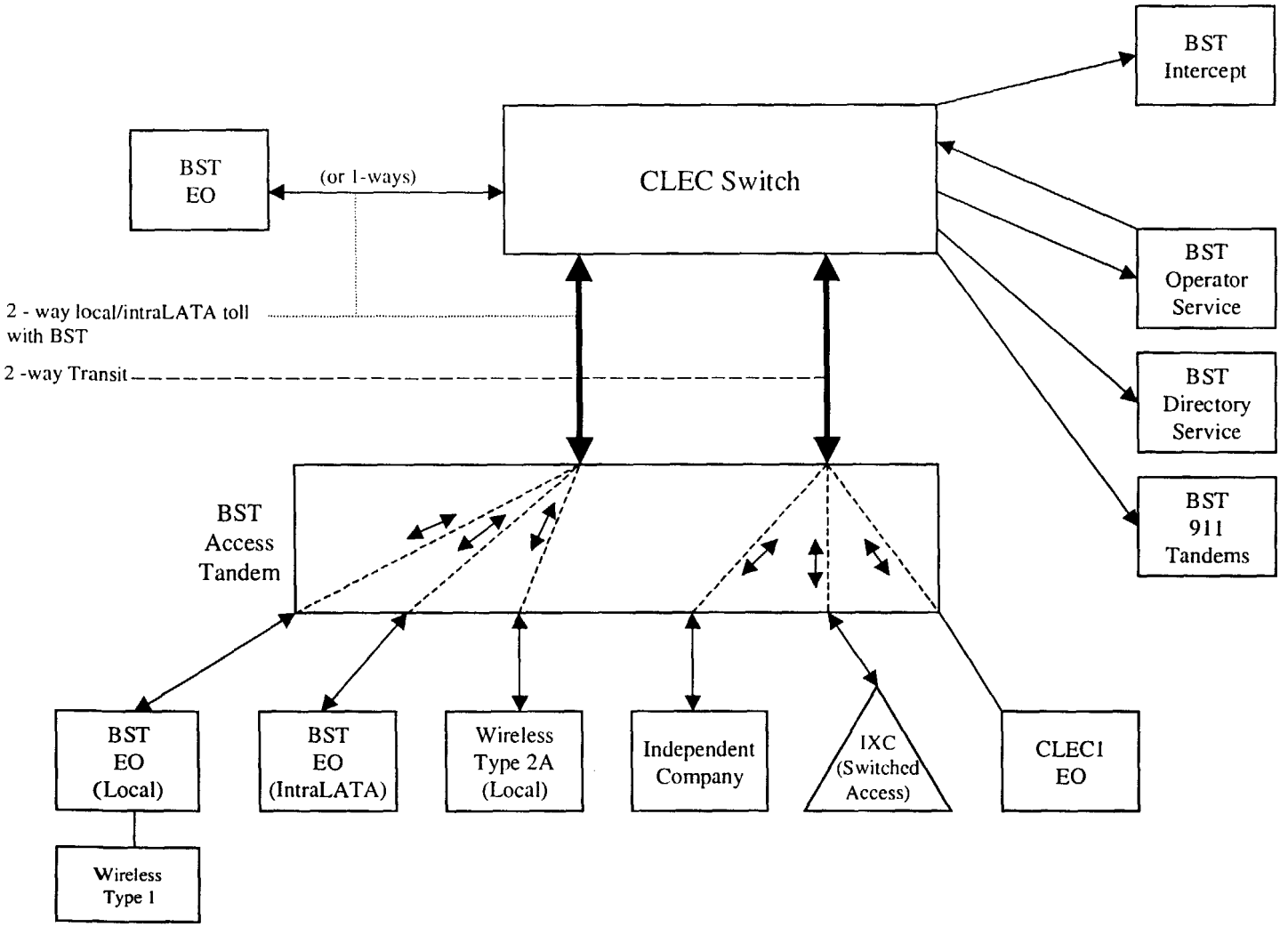

Exhibit E
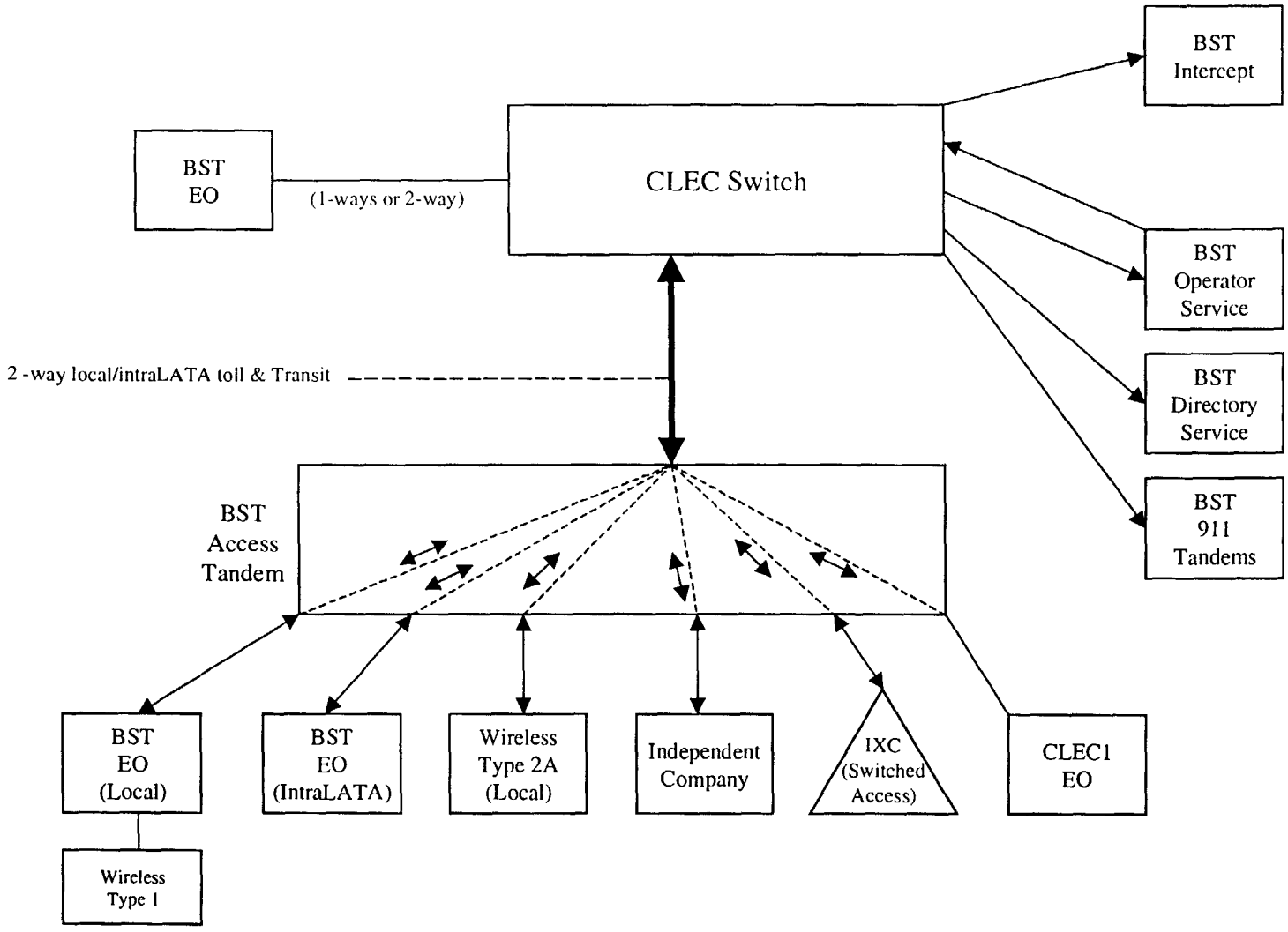
Supergroup Architecture