MDF cross-connect between the switch line and the outside plant cable pair so that the switch line could be used to connect to another cable pair that is to be placed in service.

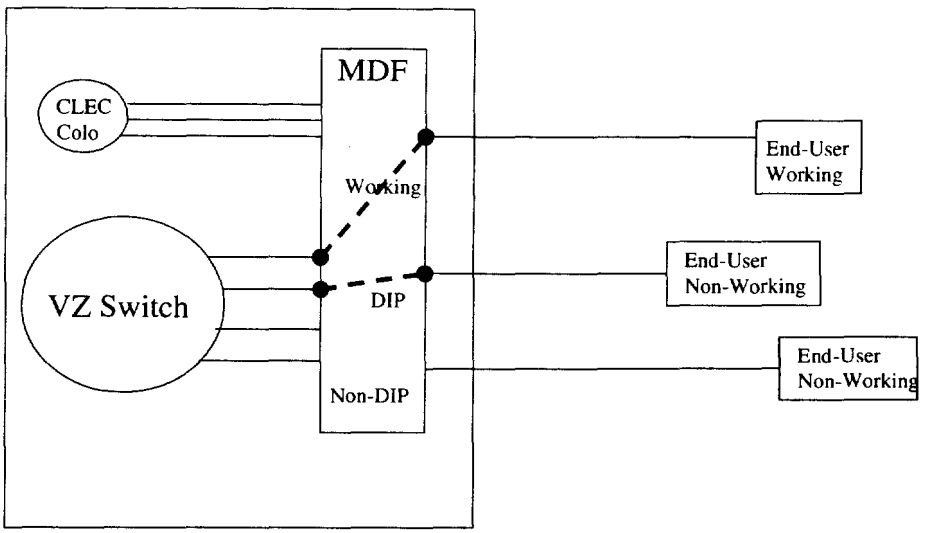

With DIP, the jumper is left in place under the assumption that another customer will *soon* apply for service in the same location where service was just disconnected. This allows the switching line equipment to be reused for providing new customer service to that location. In administering DIP, however, it does *not* make sense to leave the jumper in place forever as AT&T/WorldCom assume. As the supply of spare OE in the Verizon VA switch diminishes, it makes operational and financial sense to break an old, dormant DIP so that the OE can be used for an active customer. This allows the switch capacity to be used efficiently rather than grow frivolously.

In general, DIP is a concept that theoretically might make sense only in limited situations when a single carrier was utilizing the plant of the central office in a static customer environment and where the services were predominantly POTS. In today's

world, the emergence of CLECs collocated in central offices and growth in new services and technologies such as xDSL make 100% DIP unworkable because the simple Verizon cable to Verizon switch jumpers that were the basis for DIP have been replaced by a myriad of other, very different possibilities (for example, Verizon cable to CLEC collocation, Verizon cable to Verizon DSLAM (for xDSL) to Verizon switch, Verizon cable to CLEC collocation (for xDSL) to CLEC collocation (for voice), etc.).

Q. Is AT&T/WorldCom's 100% DIP assumption appropriate?

A. No. In a 100% DIP environment, Verizon VA would have to add significant additional switching equipment so that every feeder pair in the central office could be pre-connected to a piece of switching line equipment. In other words, there would have to be switch line equipment dedicated to each feeder pair entering the central office. This would require Verizon VA to increase the amount of switching equipment drastically — a cost that would have to be reflected in the recurring cost studies. Moreover, this additional cost would be inefficient. Because the utilization factor for feeder cable is purposely less than 100% for sound engineering reasons, it simply makes no sense to purchase and install enough switching equipment as though 100% of the feeder pairs simultaneously need to be connected to the switch.

The 100% DIP assumption also ignores the fact that central office lines generate different traffic loads that require switch load-balancing. Switch load-balancing involves disconnecting a customer's line from its current location on the switch and reconnecting the line to a different location on the switch that has a lighter load. This "balancing"

work, which is routinely performed on Verizon VA's MDFs, is done to distribute and spread the line traffic evenly across the different units of switch line equipment to improve service for the customer. When necessary, switch load-balancing is performed for existing customer dial tone lines and for the connection of new customer dial tone lines. The unrealistic 100% DIP network design would increase the costs of such balancing by requiring Verizon to disconnect and reconnect *two* jumpers (one for the line being moved to achieve balance and the second for the jumper that used to terminate at the OE where the first line is being moved).

Q. In addition to the requirement for additional switching equipment and the need to balance traffic loads, are there other problems inherent in AT&T/WorldCom's 100% DIP assumption?

A. Definitely. AT&T/WorldCom's 100% DIP assumption is violated in a world where customers can transfer from Verizon VA to CLECs and between CLECs. When a customer is being served by a collocated CLEC, Verizon would have installed a new jumper from the end user's cable pair to the CLEC's collocation arrangement; by definition, there would be no "dedicated" jumper from the feeder to Verizon's OE. If that customer then moved to another CLEC, which wanted to use the UNE-P to serve that customer, there would be no jumper in place, and Verizon would again have to install a new one.

Q. Even if AT&T/WorldCom's 100% DIP assumption were correct, would it eliminate the need for manual cross-connects in many cases?

A. No. The only situation in which Verizon VA generally does not need to install MDF jumpers is in connection with the migration of an existing Verizon customer to UNE-P service. Verizon VA's NRCM does not include the costs of installing manual cross-connects in this situation.

Even in a 100% DIP environment, Verizon VA would still have to install manual cross-connects (*e.g.*, to a CLEC's collocation cage) for stand-alone UNE loops. In such cases, Verizon VA would always have to install a new cross-connect from the feeder pair to the CLEC's collocation arrangement. Indeed, the disconnection and installation of jumpers is the essence of a hotcut.

Q. How does AT&T/WorldCom's 100% DIP assumption work when an ILEC is required to perform subloop unbundling?

A. The 100% DIP assumption does not make sense in an environment where subloop unbundling is included in the network at the request of AT&T, WorldCom, and other CLECs. In the case of subloop unbundling, the handoff to the CLEC occurs at the Verizon VA remote terminal. In that case, there would be no reason to maintain dedicated inside facilities connecting the incoming feeder pair with the OE. In effect, the jumper connecting the two would be stranded, and the OE would be of no use. Rather than maintain unused switching facilities, it is far more efficient to permit the OE to be

used for another customer (whether a Verizon customer or a CLEC customer being provided service with the UNE-P).

Q. What impact would AT&T/WorldCom's 100% DIP assumption have on recurring costs?

A. It would substantially increase recurring costs because Verizon VA would have to substantially increase its switch capacity so that it had one OE for every incoming feeder pair, notwithstanding that no network would have 100% utilization of its feeder. As far as we are aware, AT&T/WorldCom's recurring cost model fails to take account of this increase in recurring costs.

Q. Have AT&T/WorldCom provided any evidence that a real-world carrier would implement 100% DIP?

A. No. Indeed, AT&T/WorldCom's own experts apparently opined that "the 100% DIP/DOP assumption may be insupportable since absolute DIP/DOP can create problems . . . ."[11/] (We discuss 100% DOP below.) AT&T/WorldCom have subsequently admitted that their 100% DIP assumption is pure fiction. Therefore, AT&T/WorldCom see no need to account for any increased investment to implement 100% DIP. Verizon VA asked AT&T/WorldCom to explain how the 100% DIP assumption would affect sizing and utilization of CO equipment; AT&T/WorldCom replied that DIP "is a *modeling convention* to avoid double-counting of costs already reflected in the recurring cost modeling. Thus, this assumption has no effect on the sizing and utilization of central

[11/] *AT&T Denver NRC Document* at 27.

office equipment, including the size and number of switch ports."[12] But, far from prevention of "double counting," the result of applying 100% DIP is ignoring real costs: AT&T/WorldCom either would have to increase their recurring costs to account for the increased switching facilities that would be necessary for 100% DIP or recognize that 100% DIP is in fact not efficient and that carriers accordingly will incur non-recurring CO wiring costs.

AT&T/WorldCom, moreover, were unable to identify any carriers that build and maintain 100% DIP networks. Instead, AT&T/WorldCom asserted that their 100% DIP/DOP assumptions were "*conceptual inputs*" to their model.[13] "With that framework in mind, the [AT&T/WorldCom] NRCM does not produce activity work times and the associated non-recurring costs that flow from actual networks deployed by a specific ILEC."[14] In other words, AT&T/WorldCom see no need, and thus make no effort, to demonstrate that their 100% DIP assumption is in any way based on how real-world carriers actually provide service.

---

[12] Response to VZ-VA IV-28 (emphasis added).

[13] Response to VZ-VA IV-31 (emphasis added).

[14] *Id.*

B. AT&T/WorldCom's Assumptions Concerning Distributing Frames and Labor Times for Central Office Wiring Are Incorrect.

Q. What type of MDF does the AT&T/WorldCom NRCM assume in Verizon VA's central offices?

A. That is difficult to know. From AT&T/WorldCom's testimony and study, it appears that the AT&T/WorldCom NRCM assumes that all MDFs in Verizon VA's network are what are called Low Profile Distribution Frames (LPDF) or COSMIC-type frames.[15/] (*See, e.g.*, NTAB at 65.) Both Mr. Walsh and the NTAB refer specifically to such frames in describing the AT&T/WorldCom NRCM's development of costs for cross-connects in the CO; indeed, in response to a question in his testimony asking "what network architectures are assumed in the model for purposes of determining the appropriate NRC costs," Mr. Walsh expressly states that "[t]he main distributing frame ('MDF') is a low profile, punch down block for terminating copper loops in the central office." (Walsh Direct at 34; *see also id.* at 32 (citing use of "Low Profile Frames"); NTAB at 65 ("Terminate cross-connection from MDF to CFA on Low Profile Distribution Frame (LPDF (Cosmic-Type)) punch-down with short jumper concept . . . .")).

Oddly, however, AT&T/WorldCom now appear to be backing away from their reliance on low profile or COSMIC-type frames: when asked in discovery whether the NRCM assumes that all MDFs are low profile or COSMIC-type frames, AT&T/WorldCom simply responded "No."[16/] They now vaguely assert that their NRCM

15/ The term "COSMIC-type" refers to a particular brand of low profile frame manufactured by Lucent.

16/ Response to VZ-VA IV-25.

uses unspecified "forward looking, least cost, and most efficient technology" for MDFs.[17]

Q. Why do AT&T/WorldCom's assumptions about the type of MDFs matter?

A. It matters because AT&T/WorldCom apparently are assuming that the MDF will always allow Verizon VA to use a single "short jumper" to perform a cross-connect. (*See, e.g.*, NTAB at 65.) As a result, AT&T/WorldCom's NRCM dramatically understates the work times associated with providing cross-connects and disconnects. However, neither a conventional MDF nor a low profile or COSMIC-type MDF would result in the use of a single short jumper to perform the necessary cross-connects when provisioning UNEs.

Q. Does Verizon VA use low profile or COSMIC-type MDFs?

A. Not widely. Of the 215 central offices in Virginia, only 30 use COSMIC-type MDFs. This type of frame has been in operation for over 20 years; the first such frame was installed in Verizon VA's central offices in the late 1970s. Verizon VA has found that in general COSMIC-type frames are not operationally effective or cost-efficient. Verizon VA has no plans to replace its conventional MDFs with COSMIC-type frames, and, if it were to build a new wire center today, a COSMIC-type frame would not be used. As an AT&T witness, Richard Bissell, stated in North Carolina, "ILECs are no longer putting in

[17] Responses to VZ-VA IV-26 to IV-27.

cosmic frames, that I know of. . . . [C]osmic frames lead[] to additional — it . . . doubles the investment because of fiber cables and additional hardware[]."[18]

Q. Do COSMIC-type frames lower the cost of provisioning UNEs?

A. No. To understand why, it is important to begin with how COSMIC-type frames work. COSMIC-type frames are arranged in a series of side-by-side modules. One module is used to terminate cable pairs. The adjacent module is used to terminate Verizon VA's switch. This alternating arrangement of modules extends across the whole frame. The theory is that a technician needs only to run a short jumper between two adjacent modules to connect the cable pair with Verizon VA's switch (or the CLEC's collocation equipment), and that the technician therefore will need less time to place the cross-connect than if he needed to run a long jumper.

This efficiency, however, can be achieved only by careful administration and control over the assignment of ports on the block terminating the switch (or the collocation equipment) so that the assigned port is always close to the customer's cable pair. Such careful administration and control is not possible when CLECs are interconnecting with Verizon VA's loops.

[18] Test. of Richard Bissell at 200-01, *In re Permanent Pricing for Unbundled Network Elements*, Docket No. P-100, SUB 133d (N.C. Utils. Comm'n Mar. 26, 1998) (excerpt attached hereto as Attachment G).

Q. Why are the theoretical efficiencies of COSMIC-type frames lost when CLECs interconnect with Verizon VA's loops?

A. When a CLEC places an order for a loop, the *CLEC* (and not Verizon VA) specifies the connecting facility assignment — that is, the CLEC specifies which of the ports on the MDF that are connected to its collocation equipment will be used. It is highly unlikely that the MDF switch port specified by the CLEC will be in close proximity to the cable pair for the particular UNE loop that the CLEC is ordering. First, the CLEC often will not have a sufficient number of ports on the MDF to be able to have a presence on every equipment module on the frame. Second, even it if did, the CLEC would have no way of knowing which of its connecting facility assignments was on the module closest to that of the relevant cable pair (or whether any space on that module was even available). As a result, the interconnection usually will require long jumpers, which defeats the primary potential efficiency of COSMIC-type frames.

Q. Are COSMIC-type frames actually *less* efficient than conventional frames in some respects when a CLEC interconnects with Verizon's loops?

A. Yes. In a conventional frame, the Verizon VA technician generally has to run only a single jumper from the cable pair to the CLEC-assigned port on the MDF. With a COSMIC-type frame, however, the technician often has to run two jumpers. In a COSMIC-type frame, two modules of the frame that are not located close to each other must be connected by tie pairs. As a result, in order to connect a cable pair on one module to a CLEC-assigned port on a distant module, the technician has to run one jumper from the cable pair to a tie pair on the Tie Pair Distributing Frame (TPDF) — a

section of the COSMIC-type frame where tie pairs to various modules are aggregated. Then the technician has to run a second jumper from the tie pair to the module in which the CLEC-assigned port is located (which is usually on the TPDF). Similarly, in a line splitting or line sharing scenario, while a conventional frame would usually require only two jumpers, a COSMIC-type frame may require as many as four.

Q. What is the effect of all this on the work times needed to perform a cross-connect?

A. Because the use of a COSMIC-type frame will generally not result in short jumpers when a CLEC is interconnecting its loops and usually will require *more* jumpers than a conventional frame, performing a cross-connect for a CLEC on a COSMIC-type frame generally will not take any less (and may take more) time than on a conventional MDF.

Q. Does AT&T/WorldCom's NRCM understate the work times associated with performing cross-connects and disconnects on either a conventional or COSMIC-type MDF?

A. Yes. As explained below in section VIII.B, AT&T/WorldCom assume that a two-wire cross-connect can be performed in one minute. That would be the case only if (1) as explained below, one assumes away (as AT&T/WorldCom apparently do) all the activities needed to be ready to perform the cross-connect and (2) only a short jumper would ever be needed (which, as explained above, is not the case).

AT&T/WorldCom's assumption that a disconnect can be performed in 30 seconds is similarly baseless and completely unsupported. Disconnect work times include the

receipt of the request, frame appearance verification, physical removal of cross-connect wire, and completion recording. Even if one could assume that all jumpers would be short, the time AT&T/WorldCom assume is unrealistically low.

V. FIELD INSTALLATION (JDPL Issues II-1 to II-1-d; II-2 to II-2-d; IV-36)

A. The AT&T/WorldCom NRCM Fails to Include Any Costs for Dispatching a Field Technician.

Q. Does the AT&T/WorldCom NRCM include costs for work by a field technician?

A. Except for the limited case of subloop unbundling, the AT&T/WorldCom NRCM does not include any costs for dispatching a field technician in order to make necessary cross-connections at the FDI (also called the Serving Area Interface).

Q. When does Verizon VA dispatch a field technician in connection with provisioning UNE loops?

A. Verizon VA generally will dispatch a field technician to install a UNE loop in four instances: (1) for new loops where there is no drop wire from the serving terminal to the premises, no NID, and no pre-established cross-connection of the feeder cable to the distribution cable at the FDI; (2) when an existing loop is requested and there is no "cut through" — that is, feeder pair and distribution pair are no longer connected at the FDI; (3) when a CLEC requests a migration of a customer currently served on Integrated Digital Loop Carrier (IDLC), to move the end-user's service to copper or UDLC to allow the hotcut; and (4) at the request of a CLEC, usually to allow tagging of the new loop at the NID for easier identification by the CLEC.

B. The AT&T/WorldCom NRCM Incorrectly Assumes 100% Dedicated Outside Plant (DOP).

Q. AT&T/WorldCom assume that Verizon VA will never be required to perform another field cross-connect after the loop is constructed. Do you agree with this assumption?

A. No. The AT&T/WorldCom NRCM assumes that all outside plant is in place and dedicated, and that the outside plant is configured only once when constructed and is not touched again during the lifetime of the plant. (NTAB at 39-40; AT&T/WorldCom Non-Recurring Cost Model Description at 16.) Specifically, DOP assumes that once a distribution pair terminated on the field side of an FDI has been assigned to a premises, it will forever remain cross-wired to a specific feeder pair terminated on the central office side of the FDI. As we explain below, that is simply not the case.

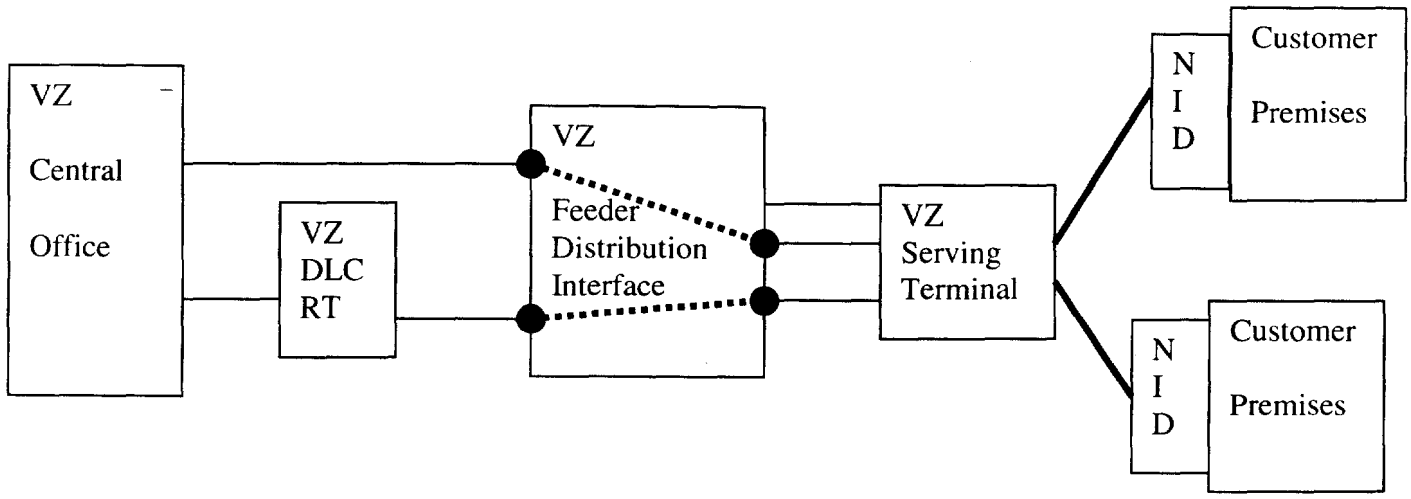

Q. How does Verizon VA design and administer FDIs?

A. With the network architecture commonly deployed by Verizon VA, a manual cross-connect is established between the feeder plant and the distribution plant. This interface allows a feeder pair to be connected to a distribution pair. In order to minimize or eliminate the possibility of having to dig new trenches and lay new loops, distribution cables are designed, among other things, to meet the maximum requirements for the area. Thus, Verizon will typically lay sufficient distribution cables to permit multiple lines from each residential or business customer location to the FDI. It would not, however, be cost-efficient to run each of those lines all the way to the central office, since not every customer at every location will use the maximum number of available lines. Accordingly, Verizon VA (like any other facilities-based LEC) makes reasonable engineering judgments concerning how many total lines in a serving area are likely to be purchased by all the customers in that area at any given time in the next three to five

years and runs that many feeder lines (with necessary administrative spare) back to the central office.

In other words, if there are 50 houses in a subdivision, Verizon might run three distribution pairs for each house to the FDI, but it would *not* run 150 lines all the way back to the central office. Instead, it would make a judgment about how many total lines those 50 houses were likely to use and have that many feeder pairs available at the FDI. Thus, the *number of distribution pairs exceeds the number of feeder pairs by design.* This allows for more efficient utilization of feeder facilities without the capital cost of providing more pairs all the way from the central office to the customer's location.

Q. How would a network with 100% DOP as assumed by AT&T/WorldCom differ?

A. Under AT&T/WorldCom's model, every distribution cable would at the time of construction be connected to a feeder cable all the way to the central office. Thus, the second, third, and fourth lines that might run from a house or business would each have dedicated lines to the Verizon VA MDF. (Of course, the folly of this design assumption is only heightened by AT&T/WorldCom's 100% DIP assumption, which would run the dedicated line all the way to the switch.) AT&T/WorldCom cannot explain, however, how any carrier would be able to predict with precision the number of lines or the types of facilities that would ultimately be ordered for *each* particular business or residence customer premises. Verizon VA would have to drastically overbuild the number of feeder cables, which would dramatically increase recurring costs, particularly given the typical length of a feeder (as opposed to distribution) cable. Moreover, it would be

constantly re-digging trenches to install new feeder as demand grew, which again would inflate recurring costs. The exorbitant level of investment required to place 100% DOP in Virginia would result in extremely high recurring rates to recover the investment.

Q. Does AT&T/WorldCom's recurring cost model account for these additional recurring costs?

A. No. AT&T/WorldCom's recurring cost model does not appear to account for the additional feeder facilities that would be required in a 100% DOP environment. Moreover, AT&T/WorldCom's 100% DOP assumption would drastically reduce the feeder utilization factor (since not every residence will use a second or third line but, under AT&T/WorldCom's assumption, every residence would have a feeder for each of those additional lines). AT&T/WorldCom's recurring cost model takes no account of the additional investment this assumption would require and, to the contrary, suggests that feeder utilization factors actually should increase. AT&T/WorldCom cannot have it both ways, demanding that non-recurring rates associated with field dispatches be reduced to zero, and then ignoring these costs in its recurring cost presentation and refusing to pay the correspondingly higher recurring rates entailed by the costs of dedicated plant.

Q. Does Verizon VA need to perform a field cross-connect every time a CLEC orders an existing loop UNE?

A. No. When a customer terminates service, Verizon VA generally leaves the field cross-connect and drop wire intact. This is called a "connect-through" or a "cut-through." If

that cross-connect is still in place when the CLEC places its order, no field cross-connect is needed, and Verizon VA's NRCM does not attribute the charge for such a cross-connect to the CLEC. Over time, however, as demand grows or shifts within the distribution area, it can be necessary to disconnect a previously used cross-connect, and reconnect the feeder facility to a new distribution pair that is being activated for a new service request. Verizon VA generally breaks the cross-connect only when needed to provide for a known service request.

Q. How would 100% DOP work together with digital loop carrier (DLC) network technology?

A. Not very well. The AT&T/WorldCom NRCM's 100% DOP assumption assumes the end-user facility is connected to a digital loop carrier remote terminal channel unit (plug-in card). Different types of services (*e.g.*, POTS and ISDN) require different types of DLC plug-in cards. This means that Verizon VA would be forced to make a "best guess" when the remote terminal is installed as to the type of services that all end user customers would want. If a customer subsequently decided to order different services from the channel unit types to which he was already connected (pursuant to Verizon VA's previous "best guess"), then Verizon VA would have to dispatch a technician to the remote terminal, and often the central office, to change-out the channel units. Thus, in this scenario, AT&T/WorldCom's 100% DOP assumption still would not eliminate the need for a field dispatch.

Q. How would subloop unbundling work in a 100% DOP environment?

A. Not at all. In a 100% DOP environment, the notion of a subloop does not make any sense. Because each line would be dedicated from the customer premise to the MDF, there would not be any real need to separate "distribution" from "feeder" and the FDI would be unnecessary. Even if that were not the case, subloop unbundling would make 100% DOP unworkable. Since the line would be handed off to the CLEC somewhere between the customer's premise and the central office in the case of subloop unbundling, maintaining a dedicated facility from that point to the central office would make no sense and would be inefficient. AT&T/WorldCom's NRCM, however, assumes the continued existence of both the FDI and subloop unbundling, which is just another example of its inconsistency.

Q. Have AT&T/WorldCom provided any evidence that a real-world carrier would implement 100% DOP?

A. No. As with its 100% DIP assumption, AT&T/WorldCom have acknowledged that their 100% DOP assumption is nothing more than a "modeling convention" and have been unable to identify any carriers that build and maintain a 100% DOP network.[19/] Thus, AT&T/WorldCom's assumption again bears no relation to the real-world operation of a network.

[19/] *See* Responses to VZ-VA IV-28, IV-31.

C. The AT&T/WorldCom NRCM Improperly Assumes That Field Cross-Connect Activity Is Captured in Recurring Rates.

Q. Do you agree with the statements of Mr. Walsh that the field cross-connect activity for a new loop is included in the recurring loop charge? (Walsh Direct at 23.)

A. No. AT&T/WorldCom's claim rests on the assumption that once a field cross-connect is performed, it will never be performed again. In point of fact, however, as we explained above, field cross-connects may be disconnected in certain cases. Verizon VA's non-recurring cost model includes only the additional costs of performing the cross-connect in those cases.

While some feeder to distribution cross-connection work may be performed at the time facilities such as FDIs are constructed, the cross-connection cost covered by a field dispatch is not duplicative of that which is included in the recurring costs. The cross-connection work for which CLECs would be charged is associated with work activities required to establish service or with a request for such a dispatch.

VI. COPPER/FIBER RATIO AND ELECTRONIC PROVISIONING OF LOOPS

Q. The AT&T/WorldCom NRCM assumes that about 40% of loops are fiber as opposed to copper. What is the significance of that assumption?

A. This assumption is critical because AT&T/WorldCom rely on a series of flawed hypotheses about loop provisioning over fiber feeders to avoid paying for the actual costs associated with provisioning stand-alone loops, particularly the costs of performing manual cross-connects. The AT&T/WorldCom NRCM assumes that whenever fiber is

used, an unbundled loop can be provisioned electronically by the OSS, without the need for manual intervention. (*See* Walsh Direct at 32 ("[A] digital loop will enter the central office on electronics as a DS0 channel riding within a DS1. To interconnect it to the CLEC's network, an electronic cross-connect is made by the ILEC's OSS. It has no appearance on the MDF.").) As a result, AT&T/WorldCom simply assume away most of the actual costs of provisioning an unbundled loop that enters the central office over a fiber feeder.

As explained below, AT&T/WorldCom's conclusion is unsupported and wrong for at least two independent reasons. First, even assuming their proposal were technically feasible, AT&T/WorldCom's position glosses over the critical distinction between unbundling a stand-alone copper loop and a hand-off over a multiplexed channelized DS1. Under AT&T/WorldCom's theory, rather than a two-wire analog loop handed off on two copper wires, a CLEC would order a "virtual loop" handed off on a multiplexed channelized DS1. This new form of hand-off would require different hardware and software on both the Verizon VA and the CLEC side, with new investment in equipment and OSS. In other words, it would be a wholly different UNE that would entail wholly different recurring and non-recurring costs. Lumping together the costs for provisioning stand-alone copper loops with the theoretical costs for electronically provisioning this "virtual loop" riding a multiplexed channelized DS1 to calculate a single NRC for provisioning both kinds of UNEs mixes (real) apples and (entirely theoretical) oranges. The result is that the AT&T/WorldCom NRCM inappropriately lowers the non-recurring costs associated with provisioning an unbundled copper loop.

Second, AT&T/WorldCom's proposed method is not commercially or technically feasible at this time — that is, the requisite technology and systems are not currently available. In fact, ***all*** unbundled loops that Verizon VA transports over fiber are provisioned with copper appearances (terminations) on the MDF with a cross-connect to the CLEC's equipment, and even in a forward-looking network, Verizon VA will continue to hand-off individual two-wire analog loops to the CLEC's collocation arrangement on two copper wires. Thus, increased use of fiber will not alter the means of provisioning individual two-wire analog loops.

In short, AT&T/WorldCom hypothesize new types of UNE loops that are not technically feasible, fail to account in their recurring model for the significant costs of implementing the necessary equipment and wholly new OSS for such new UNEs, assert that the fantasy UNE "virtual loop" would entail no non-recurring costs for manual provisioning, meld that UNE with the existing stand-alone loop UNE, and then propose to reduce the amount CLECs must pay for the manual cross-connects necessary for stand-alone loops. Thus, it is hardly surprising that AT&T/WorldCom have conceded that they are "not aware of *any* arrangements with *any* ILEC using" any method to electronically provision unbundled loops carried over IDLC.[20/]

[20/] Response to VZ-VA VII-26.

A. The Electronic Cross-Connect Using a DS1 Handoff Is a Different UNE Than a Stand-Alone Copper Loop.

Q. Please explain how Verizon VA provisions a fiber-fed loop.

A. As a threshold matter, it is necessary to understand how a modern DLC system terminates in the Central Office. The optical transport system that connects the remote terminal (RT) to the CO terminates in a Central Office Terminal (COT). The channel interfaces on the COT end are used to connect DS0 or DS1 loop channels to digital circuit switches. These interfaces include several types of DS1 connections, basic rate ISDN (BRI), and a number of analog wire connections. The channelized DS1 (24 multiplexed DS0s) connection options are called "integrated" or IDLC because they allow interconnection to a digital switch without decoding the DS0 channels. The BRI and analog wire options are called "universal" or UDLC because they provide the reverse functionality of the RT channel units and return the customer signal to its original line format. The "universal" label reflects the capability to connect with any device that supports one of the standard customer line interfaces — generally two copper wires. Each channel of a UDLC is then taken to the MDF.

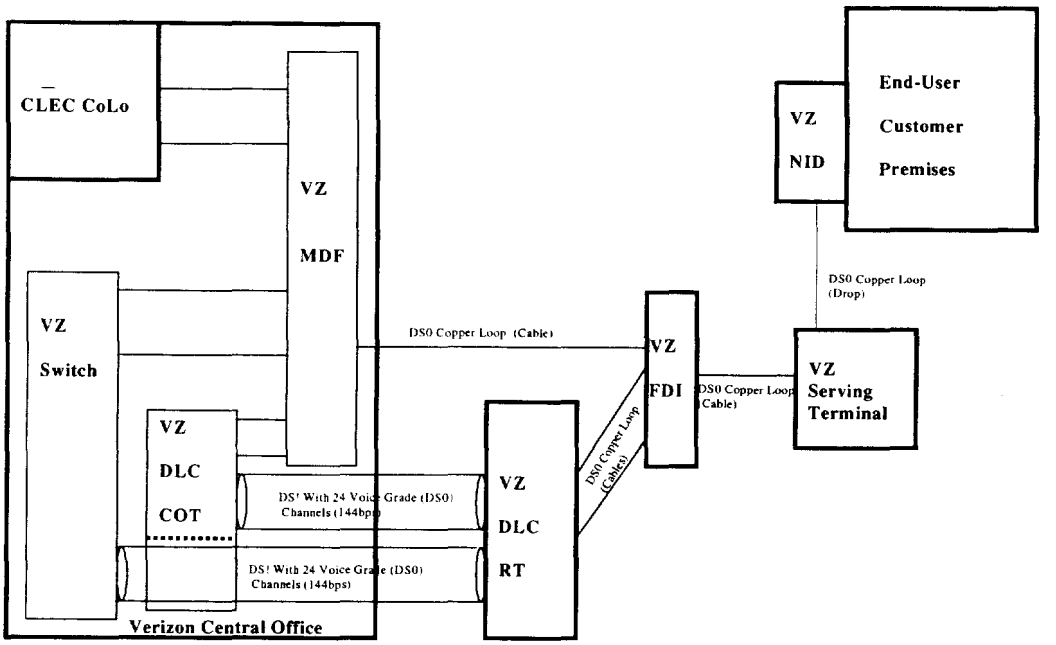

The critical point is that, even where it uses DLC, Verizon VA connects all stand-alone unbundled loops to CLEC collocation arrangements using copper wires in the CO. In the case of UDLC, since the line is already taken back to the MDF, the loop is provisioned like any other copper loop (*i.e.*, a jumper connects the incoming location on the MDF to a CLEC-assigned port on the MDF). In order to unbundle a loop that currently uses IDLC, Verizon VA must remove that loop from the IDLC at the RT and connect it instead to a copper or UDLC feeder so that it can be connected to the CLEC's collocation facilities at the CO.

Q. Why does the architecture hypothesized by AT&T/WorldCom (*i.e.*, electronically interconnecting a digital loop fed by IDLC GR-303 that enters the central office as a DS0 channel riding within a DS1) describe a wholly different UNE loop product than a stand-alone loop?

A. The standard UNE loop consists of a copper two-wire handoff at each end regardless of the intermediate transmission technology (copper wire or fiber): a two-wire connection to the end-user's NID and a two-wire connection to the CLEC's equipment port on the main distribution frame. The technology hypothesized by AT&T/WorldCom would be far different. While it would start as a pair of copper wires at the customer's NID, it would connect to a circuit pack in the Verizon remote terminal and then travel through a time slot interchanger (TSI) to a particular channel in a DS1 between the DLC RT and COT. This DS1 would be separately leased by the CLEC and connected directly to its collocation area without ever again becoming a pair of copper wires and without ever hitting the main distribution frame.

This architecture does not fit the technical definition of any UNE loop type currently provided by Verizon. AT&T's interconnection agreement in Virginia incorporates by reference the definitions of individual UNE loops, including their interfaces, contained in certain technical reference publications. These technical references, as well as related references and Verizon's Wholesale Website (http://www.bell-atl.com/wholesale/html/handbooks/clec/c3toc.htm), provide that, regardless of how Verizon VA transports these loops to the Verizon VA central office, the central office connection from Verizon VA to the CLEC for a two-wire UNE loop is

always one pair of copper wires and one circuit handed off at the CLEC's assigned port on the main distributing frame.

Accordingly, providing CLECs (up to) 24 individual two-wire or four-wire unbundled loops on a single multiplexed channelized DS1 would — if it were practicable at all — constitute a separate and different unbundled element, and would involve different ordering specifications to be provided to Verizon VA (by the CLEC), as well as different operational processes, technical standards, operational support systems, test systems, and equipment in the COs and RTs. These additional unbundled elements would also have different recurring and non-recurring costs.

Q. Why does it matter that AT&T/WorldCom's proposal would constitute a different UNE from the stand-alone loop that Verizon offers?

A. It matters because, in pooling this hypothetical UNE loop architecture with the current two-wire UNE loops and coming up with a single non-recurring charge for all UNE loops, AT&T/WorldCom are attempting to lower the "average" cost of provisioning loops and use these unrelated cost efficiencies to drive down the cost for provisioning the current standard UNE loop rate elements. For example, in a central office with 1000 loops, AT&T/WorldCom first assume that 390 of those loops are fiber and the other 610 are copper; they then assume that fiber loops have no provisioning costs, while copper loops have a cross-connect installation cost of $0.68 in their model; AT&T/WorldCom's model then calculates the non-recurring cost of any loop, including the stand-alone copper loop, to be $0.41 (61% of $0.68). As a result, AT&T/WorldCom have cut the

non-recurring provisioning cost for copper loops by nearly 40% by pooling them with a different (and, as discussed further below, nonexistent) UNE loop product. Moreover, a CLEC would get the benefit of this reduction even if it purchased only stand-alone copper loops and did not pay the separate recurring and non-recurring charges for the DS1 between the RT and the CLEC's collocation over which electronic provisioning would theoretically occur.

B. <u>AT&T/WorldCom's Proposed Architecture Is Technologically Infeasible.</u>

Q. Why can't individual unbundled loops connected to an IDLC RT using GR-303 interfaces be connected to a CLEC collocation arrangement using a channelized DS1 interface to the CLEC?

A. This is not technically feasible. It would require the creation of a GR-303 interface group from an individual RT to a specific CLEC. While more than one GR-303 interface group can be created to an RT, the available DLC technology was not designed to support multi-carrier operation. The DLC GR-303 technology uses dynamic time slot interchange functionality, which means that it provides and severs electronic connections in the remote terminal on a call-by-call basis. This functionality requires continuous communication between the switch and remote terminal to administer and control the on-going electronic activity so that, for example, an ongoing call is not cut off because the channel it is using is transferred to a new call. If a single RT were connected to multiple switches — each owned and operated by a different company — network reliability, network security, and operational control of the remote terminal would be very problematic. These problems would have to be resolved before GR-303 based systems

could become technically feasible in a multi-carrier environment. Although there have been some industry discussions about the technical developments required to support multi-carrier GR-303 interfaces, to date, a comprehensive specification has not been defined. Moreover, no supplier has developed the capabilities to resolve these issues. Thus, no such technology is currently available.

Q. What implications does this have for the NRC studies?

A. The NRC studies must reflect the reality that all stand-alone UNE loops provided by Verizon VA over DLC will use a UDLC interface, even if a portion of the DLC system is configured as IDLC. This is true even if the customer location is served with GR-303 IDLC. In that case, the end user's loop would need to be moved to a UDLC portion of the DLC system so it could be connected to the CLEC's collocation arrangement using standard copper cross-connects. Therefore, a manual cross-connect in the CO will always be necessary for these loop types, and AT&T/WorldCom's assumption that such loops would not require a manual cross-connect is incorrect.

VII. DSL ISSUES (JDPL Issues II-1 to II-1-d; II-2 to II-2-d; IV-36)

Q. Does AT&T/WorldCom's NRCM properly account for non-recurring costs associated with DSL?

A. No. AT&T/WorldCom's NRCM does not even attempt to estimate the non-recurring costs associated with DSL. Accordingly, Verizon VA's model is the only record evidence concerning those costs and should be adopted by the Commission. Moreover, as we discuss below, AT&T/WorldCom's assertions that the costs of loop qualification