1 **Q. IF THE COMMISSION, INAPPROPRIATELY, ALLOWS VERIZON TO**
2 **CHARGE ANY AMOUNT FOR MANUAL LOOP MAKEUP**
3 **INFORMATION OR AN "ENGINEERING QUERY," WHAT WOULD BE**
4 **A REASONABLE ESTIMATE OF THE TYPICAL COST FOR THOSE**
5 **EFFORTS?**

6 A. Given modern databases and recordkeeping systems, it should not take any longer,
7 on average, than half an hour for an engineering assistant to pull loop makeup
8 information manually and fax or otherwise transmit that information to a
9 competitor. Therefore, if one assumes that Verizon's labor rate for that employee
10 is about $40, a total cost of about $20 would be reasonable.

11 **Q. DOES THAT CONCLUDE YOUR TESTIMONY AT THIS TIME?**

12 A. Yes.

13

14

A

Attachment 1

DETAILED CRITIQUE AND RESTATEMENT OF VERIZON'S "CONDITIONING" AND ENGINEERING WORK ORDER TASKS AND TASK TIMES

Verizon's Proposed Non-Recurring "Conditioning" Charge Does Not Reflect the Practices that an Efficient Carrier Would Employ to Perform the Tasks Necessary to Remove Load Coils and/or Excessive Bridged Tap

1. As we have explained through both the direct testimonies of Ms. Murray and the body of this AT&T/WorldCom Non-Recurring Cost and Advanced Services Reply Panel testimony, the forward-looking network architecture assumed in both the Synthesis Model sponsored by AT&T and WorldCom and the recurring cost studies sponsored by Verizon does not include any load coils or excessive bridged tap. Therefore, the non-recurring "conditioning" activities included in Verizon's cost study would never occur in the forward-looking network and have no place in a forward-looking cost study.

2. If the Commission nonetheless decides to permit Verizon to levy a non-recurring "conditioning" charge, that charge should reflect the costs that a carrier would incur to removal load coils and excessive bridged taps using least-cost, most-efficient work practices. The tasks and task times on which Verizon has based its proposed non-recurring "conditioning" charges do not reflect such efficient work practices.

3. The one inefficient assumption that contributes most to Verizon's overstated "conditioning" costs is its assumption that it will "condition" loops one-at-a-time. For example, Verizon assumes that it will remove load coils pursuant to each specific request and will remove the load coil from an individual loop. To the

contrary, it is a standard, efficient engineering practice to deload more than entire binder groups (typically 25 loops) at one time. Similarly, it is unusual and inefficient to remove bridge tap one-loop-at-a-time, as Verizon assumes will always be the case.

4. The standard practice in the industry is to prevent multiple re-entries into outside plant splices because multiple re-entries can cause serious deterioration in the wire insulation that will cause telephone wires to short out. Consequently, engineers have been instructed to engineer copper plant in terms of binder groups[1] of either 25 pairs or groups of 50 pairs. Based on prior Verizon testimony submitted in other jurisdictions on this topic and on general knowledge concerning engineering guidelines, there does not seem to be any dispute that outside plant is engineered to maintain "binder group integrity," that is, not splitting a binder group for splicing purposes. For 30 years, incumbents such as the Verizon affiliates have used either Lucent 710 25-pair splice connectors or 3M MS2 25-pair splice connectors in their outside plant. Single-pair splicing has been outdated for decades. With either type of equipment, unless pairs are "conditioned" in multiples of 25 or 50 pairs, or more, at a time, a splice will soon degrade to the "bunch of grapes."

5. There are times when only one pair can be "conditioned." However, there are also cases where many hundreds of pairs at a time can be "conditioned." Any non-recurring "conditioning" charge should be based on an approach that will be reasonable for the vast majority of cases. For example, if a load coil must be

removed from a 25-pair splice with other working lines that are longer than 18,000 feet of copper, then it would not be proper to deload the entire 25-pair group of pairs. However, there are other cases involving a 2400-pair cable working at 75% utilization (1800 working pairs, and 600 spare pairs). With 600 spare pairs, it would make sense to deload several hundred pairs in anticipation of rapid growth for DSL services. It makes no sense from either an engineering or an economic perspective to plan to "condition" one line at-a-time given the hundreds of thousands of customers that are projected to choose xDSL service over the next few years. An assumption that Verizon will typically "condition" 50 pairs at a time, to limit maintenance problems associated with multiple splice reentry, is a reasonable middle ground.

6. Information supplied by several incumbents confirms that that it is standard business practice to "condition" entire binder groups. As one example, parties showed that Southwestern Bell Telephone Company ("SWBT") intended to use a multiple line conditioning approach for its own operations and, as a result, the Texas Public Utility Commission took a costing approach similar to the one we develop.[2] Likewise, Ms. Murray and Mr. Riolo recently participated in a Missouri proceeding in which the Missouri Public Service Commission staff had observed several actual SWBT "conditioning" jobs (as selected by SWBT). The staff summarized its observations as showing that:

---

[1] A "binder group" is designated as such because, inside a copper cable sheath, groups of pairs are segregated into manageable groups of pairs by binding such a group of either 25 pairs or 50 pairs with a thin color-coded ribbon wound around that group of pairs.

[2] *See* Petition of Rhythms Links, Inc., for Arbitration to Establish an Interconnection Agreement with Southwestern Bell Telephone Company, Texas PUC Docket Nos. 20226 and 20272, Arbitration Award at 97-98 (Nov. 30, 1999), *aff'd* Order Approving Interconnection Agreements (Feb. 7, 2000).

> In many instances, during Staff's observations, SWBT engineers made the decision to condition twenty five to fifty loops when an order was made for one conditioned loop. Much of the work involved in loop conditioning is incurred in gaining access to and opening the splice case to reach the cable pairs. Therefore it is easy to see that the bulk of the work is to condition the first cable pair and, as such, there are efficiencies to be gained from conditioning additional cable pairs since the work necessary to gain access to and to open the splice case has already been performed.[3]

7. In the same Missouri proceeding (as in other jurisdictions), Jimmy R. Davis, a witness for Sprint Communications Company, L.P., ("Sprint") confirmed that in Sprint's incumbent local exchange company operations "it is common practice to remove load coils in bulk as opportunities arise."[4]

8. Similarly, SBC witness Dave Borders admitted in a Nevada regulatory proceeding that Pacific Bell and Nevada Bell practiced multiple loop "conditioning" until Pacific Telesis Group was acquired by SBC.[5]

9. As the calculations below demonstrate, the efficiencies gained by conditioning entire binder groups at once, are entirely ignored in the Verizon study, are substantial.

10. Removing bridged tap from older plant can have many ancillary benefits for Verizon. First, the requested conditioning for the service order is accomplished. Second, each pair unbridged at a branch splice location (a procedure that

---

[3] Missouri Public Service Commission, Case No. TO-2001-439, Supplemental Direct Testimony of Myron E. Couch, Missouri Public Service Commission Utility Operations Division, June 1, 2001, at 3.

[4] Missouri Public Service Commission, Case No. TO-2001-439, Rebuttal Testimony of Jimmy R. Davis, on behalf of Sprint Communications Company, June 22, 2001, at 7.

[5] Public Utilities Commission of the State of Nevada, Docket No. 99-12033 and Docket No. 00-4001 at Tr. 640-643.

improves the existing service without disrupting it) transitions the network towards present-day engineering standards. (Verizon should have been unbridging pairs since the introduction of the Serving Area Concept ("SAC") in 1972.) Third, transmission of voice-grade service on these working circuits is improved because the insertion loss, caused by the bridged tap, is removed. Fourth, the unbridged working circuits provide a base of preconditioned pairs that could be utilized for future services that are incompatible with excessive bridged tap: Verizon could provision loops for those services via a line and station transfer to one of the unbridged working circuits in lieu of opening cable splices to unbridge an individual pair at the time of the future service request. Fifth, the unbridged working services now have less exposure to maintenance problems, which will result in reduced customer trouble reports. Sixth, conditioning working service precludes the need to re-enter a working splice on numerous occasions to condition one pair at a time, which potentially causes customer outages. Seventh, unbridging working service does not require the amount of engineering study that would be involved if every spare pair was studied, grouped, and allocated to a specific branch cable. Because the actual "wire work" is a relatively minor portion of the cost of the job, this approach is cost-effective. Moreover, unbridging multiple pairs at a time substantially reduces the "conditioning" cost on a "per unit" basis. The benefit to Verizon is that the orders trigger an unbridging opportunity to clean up its outside plant – something that it should have been doing proactively since SAC design in 1972, but perhaps had no opportunity to do so because the particular bridged tap splice involved had no

activity in the last 28 years. For all of these reasons, it is reasonable to presume that Verizon might unbridge even more that 50 pairs at-a-time on average.

Efficient Tasks and Task Time Assumptions for "Conditioning" Loops

11. If the Commission were to allow Verizon to charge for load coil removal, it should apply tasks and task time assumptions consistent with standard engineering practices. An all-copper voice-grade loop that is 18,000 feet or longer would have load coils deployed at 6,000-foot intervals, starting with three locations (at 3,000 feet, 9,000 feet, and at 15,000 feet). Feeder cable is normally placed in conduit when close to the central office; therefore, the first two load coil locations will typically involve underground cable at manhole locations. The third location is most likely in aerial or buried locations. Therefore, the following analysis assumes that 50 percent of the time, deloading of the third load coil will be at an aerial location, and 50 percent of the time, deloading of the third load coil will be at a buried location. The Commission can rely on the following work steps and conservative time estimates to estimate the costs involved in removing load coils from these three locations:

Underground Cable Load Coil Removal in a Manhole		
Step	Description	Task (min.)
1	Travel time to underground splice location.	20
2	Set up work area protection and underground work site.	5
3	Pump and ventilate manhole.	15
4	Buffer cable / Rerack cable / set up splice.	5
5	Open splice case.	5
6	Identify pairs to be deloaded for 1st 25-pair binder group.	5
7	Bridge 25-pair binder group for service continuity (if necessary).	5
8	Remove / sever connection from main cable to load 'in' & 'out' taps.	3
9	Rejoin / splice 25-pair binder group through main cable.	5
10	Remove bridging modules from Step 7.	2
11	Identify pairs to be deloaded for 2nd 25-pair binder group.	5
12	Bridge 25-pair binder group for service continuity (if necessary).	5
13	Remove / sever connection from main cable to load 'in' & 'out' taps.	3
14	Rejoin / splice 25-pair binder group through main cable.	5
15	Remove bridging modules from Step 12.	2
16	Clean, reseal, and close splice case.	10
17	Rack cables, pressure test cables in manhole.	10
18	Close down manhole, stow tools, break down work area protection.	10
	Total Minutes	120
	Total Hours	2.00
	No. Technicians	2
	Total Timesheet Hours	4.00
	No. Locations	2
	Total Hours	8
	Pairs deloaded	25
	Minutes per pair	19.2 min.

Aerial Cable Load Coil Removal at a Pole (50% occurrence)		
Step	Description	Task (min.)
1	Travel time to aerial splice location from underground splice location.	10
2	Set up work area protection.	5
3	Set up ladder or bucket truck.	10
4	Open splice case.	5
5	Identify PIC pairs to be deloaded for 1st 25-pair binder group.	2
6	Bridge 25-pair binder group for service continuity (if necessary).	5
7	Remove / sever connection from main cable to load 'in' & 'out' taps.	3
8	Rejoin / splice 25-pair binder group through main cable.	5
9	Remove bridging modules from Step 6.	2
10	Identify pairs to be deloaded for 2nd 25-pair binder group.	2
11	Bridge 25-pair binder group for service continuity (if necessary).	5
12	Remove / sever connection from main cable to load 'in' & 'out' taps.	3
13	Rejoin / splice 25-pair binder group through main cable.	5
14	Remove bridging modules from Step 11.	2
15	Clean, reseal, and close splice case.	10
16	Secure splice case to strand and clean up work area.	10
17	Close down aerial site, stow tools, break down work area protection.	10
	Total Minutes	94
	Total Hours	1.57
	No. Technicians	1
	Total Timesheet Hours	1.57
	No. Locations	0.5
	Total Hours	0.78
	Pairs deloaded	25
	Weighted aerial average minutes per pair	1.88 min.

Buried Cable Load Coil Removal at a Pedestal (50% occurrence)		
Step	Description	Task (min.)
1	Travel time to buried splice location from underground splice location.	10
2	Set up traffic cone at rear bumper of truck.	1
3	Walk to site & open splice pedestal.	2
5	Identify PIC pairs to be deloaded for 1st 25-pair binder group.	2
6	Bridge 25-pair binder group for service continuity (if necessary).	5
7	Remove / sever connection from main cable to load 'in' & 'out' taps.	3
8	Rejoin / splice 25-pair binder group through main cable.	5
9	Remove bridging modules from Step 6.	2
10	Identify pairs to be deloaded for 2nd 25-pair binder group.	2
11	Bridge 25-pair binder group for service continuity (if necessary).	5
12	Remove / sever connection from main cable to load 'in' & 'out' taps.	3
13	Rejoin / splice 25-pair binder group through main cable.	5
14	Remove bridging modules from Step 11.	2
16	Secure splice within buried pedestal and clean up work area.	3
17	Close down buried site, stow tools and traffic cone.	5
	Total Minutes	55
	Total Hours	0.92
	No. Technicians	1
	Total Timesheet Hours	0.92
	No. Locations	0.5
	Total Hours	0.46
	Pairs deloaded	25
	Weighted buried average minutes per pair	1.10 min.

12. Bridged tap should not exist in underground feeder cable close to the central office. Therefore, the following analysis assumes that a single case of bridged tap, if it occurs, would occur 50 percent of the time at an aerial location, and 50 percent of the time at a buried location. Accordingly, the Commission can use the following work steps and conservative time estimates to estimate the costs involved:

Aerial Cable Bridged Tap Removal at a Pole (50% occurrence)		
Step	Description	Task (min.)
1	Travel time to aerial splice location.	20
2	Set up work area protection.	5
3	Set up ladder or bucket truck.	10
4	Open splice case.	5
5	Identify PIC pairs for bridged tap removal for 1st 25-pair binder group.	2
6	Remove bridging modules or cut & clear pairs for 1st 25-pair group.	2
7	Identify PIC pairs for bridged tap removal for 2nd 25-pair binder group.	2
8	Remove bridging modules or cut & clear pairs for 2nd 25-pair group.	2
9	Clean, reseal, and close splice case.	10
10	Secure splice case to strand and clean up work area.	10
11	Close down aerial site, stow tools, break down work area protection.	10
	Total Minutes	78
	Total Hours	1.30
	No. Technicians	1
	Total Timesheet Hours	1.30
	No. Locations	0.5
	Total Hours	0.65
	Pairs Unbridged	50
	Weighted aerial average minutes per pair	0.78 min

Buried Cable Bridged Tap Removal at a Pedestal (50% occurrence)		
Step	Description	Task (min.)
1	Travel time to buried splice location	20
2	Set up traffic cone at rear bumper of truck	1
3	Walk to site & open splice pedestal	2
4	Identify PIC pairs for bridged tap removal for 1st 25-pair binder group	2
5	Remove bridging modules or cut & clear pairs for 1st 25-pair group	2
6	Identify PIC pairs for bridged tap removal for 2nd 25-pair binder group	2
7	Remove bridging modules or cut & clear pairs for 2nd 25-pair group	2
8	Secure splice within buried pedestal and clean up work area	3
9	Close down buried site, stow tools and traffic cone	5
	Total Minutes	39
	Total Hours	0.65
	No. Technicians	1
	Total Timesheet Hours	0.65
	No. Locations	0.5
	Total Hours	0.33
	Pairs Unbridged	50
	Weighted buried average minutes per pair	0.40 min.

13. If the Commission allows Verizon to impose nonrecurring "conditioning" charges, it should use work steps and time estimates we have shown above, along with whatever labor rates it adopts for Verizon, to estimate the costs involved in removing bridged tap. Our analysis shows that the total average time for removing all load coils from a loop is just over 22 minutes per pair and that the total average time for removing a bridged tap from a loop is just over one minute per pair. At a labor rate of $45, for example, a load coil removal charge of $16.63 per pair and a bridged tap removal charge of $0.89 would apply.[6]

14. Mr. Riolo presented the same times for "conditioning" tasks in the recent Florida UNE proceeding. In that proceeding, Mr. William Greer, BellSouth's witness on "conditioning" task times confirmed that Mr. Riolo's conditioning task and task time estimates corresponded well with the work shown on a BellSouth-sponsored videotape.[7]

> Q So you would agree with me that he [Mr. Riolo] was pretty close? In fact, he gave you all a little bit more time for that task?
>
> A Actually, he has been very close in all of these. As you look at these, you will see that his total time is close to what BellSouth has. So, yes, he has done a very good job here of enumerating the steps and giving some times.[8]
>
> Q Well, I believe you testified somewhere here in the middle that Mr. Riolo did a pretty accurate job of estimating task times.

---

[6] This discussion uses an illustrative labor rate, which is intended to be conservative, to show an upper bound for efficient conditioning costs that does not need to be treated as proprietary. It is a simple matter to substitute any adopted labor rate and any applicable shared and common cost to develop a final, Verizon-specific result.

[7] Florida Public Service Commission Docket No. 990649-TP, Re: Investigation into Pricing of Unbundled Network Elements, videotape filed September 20, 2000.

[8] Florida Public Service Commission Docket No. 990649-TP, Tr. 1751, lines 6–13.

A I said he did an excellent job of listing out the tasks, and his assumptions on times were reasonable, yes.[9]

15. In contrast, Verizon's proposed task times and occurrence factors are significantly out of line with reasonable values for loop "conditioning."

16. Verizon's witness panel asserts that "typical occurrence factors and forward-looking adjustment factors were applied to obtain forward-looking time estimates for the work activities required to complete the specific qualification and conditioning tasks."[10] That assertion if not correct.

17. Only one task included in the "conditioning" studies, "send tone," was assigned an occurrence factor of less than 100%. On the other hand, Verizon has assigned occurrence factors of 100% to tasks that are obviously not always necessary.

18. Verizon has assigned occurrence factors of 100% to tasks that are obviously not always necessary. For example, Verizon has assigned a 100% occurrence factor to "pump manhole if necessary," even though Verizon will not always encounter water in the manhole (and if it does it is usually the result of a failure to follow methods and properly seal the manhole). Because this task is described as "pump manhole *if necessary*," the survey respondents would not have provided an averaged time for all jobs (taking into account the majority of occasions when pumping is not necessary). Instead they would have estimated the total time to pump expecting that someone else would determine how often pumping is necessary.

---

[9] *Id.* at Tr. 1767, lines 6–11.

[10] Verizon Cost Panel Testimony at 140.

19. Verizon's task times are obviously not adjusted to be forward-looking or efficient. For example, Verizon's studies for load coil removal begin by assuming that it takes an average of between *****BEGIN VERIZON PROPRIETARY *** *** *** END VERIZON PROPRIETARY ***** minutes to "receive work assignment from foreman and travel to job site and another *****BEGIN VERIZON PROPRIETARY ** *** ** END VERIZON PROPRIETARY ***** minutes to set up work area protection on arrival. Hence, Verizon would have the Commission accept that its technicians, on average, will likely need a lunch break before they actually get around to beginning any productive work on a given day. Such extreme inefficiency is not plausible. Work assignment is typically automated and takes next to no time. Work dispatch locations are typically centralized in a rational manner so that travel time averages much less than Verizon assumes. Verizon's setup time is likewise plainly out of a reasonable range. In the worst cases, setup typically involves placing safety cones and signs. These items can be properly placed in a matter of minutes by walking at a reasonable pace. The manhole opening may require a "rim" to keep surface water from entering the manhole when they are located near the curb and it potentially might rain. The rim can be set and inflated to properly seal the opening in moments. In total, these activities require a small fraction of the time that Verizon claims.

20. Most of Verizon's reported times are equally implausible. Looking at the underground "conditioning" study as an example, the next task in order is to open and ventilate the manhole, which Verizon suggests will typically take another

*****BEGIN VERIZON PROPRIETARY *** END VERIZON PROPRIETARY ***** minutes. The AT&T Outside Plant Engineering Handbook indicates that the largest common precast loading manhole, with a capacity for 28 large load coil cases, would measure 6 ft. wide by 15 ft. long by 12 ft. high. This equates to 1,080 cubic feet of volume. An advertisement by a typical manufacturer, *Pelsue Corporation*, specifies its high volume blower at 3700 cubic feet per minute ("cfm"). The standard industry safety practice is to ensure that the manhole volume is purged for twice its volume. Pelsue's 3700 cfm unit would take less than one minute to accomplish that objective.

21. The following task in Verizon's analysis is to pump the manhole "if necessary," which Verizon asserts will typically take yet another *****BEGIN VERIZON PROPRIETARY *** END VERIZON PROPRIETARY ***** minutes. A typical manufacturer, *Nutmeg Utility Products*, provides a normal 3-inch discharge electric submersible pump that operates at 480 gallons per minute ("GPM"). A pumping volume of 480 gallons per minute at 0.1337 cubic feet per gallon, would equate to 64.176 cubic feet of water per minute. Even if the largest 1,080 cubic foot manhole were filled to the brim with water, the 480 GPM pump would empty that manhole of water in 16.83 minutes. In addition, not all manholes in the State of Virginia contain much water, and few, if any, would be filled to the brim. It is very likely that pumping water out of manholes in Virginia is actually only required in a relatively small percentage of cases. Therefore our proposed average time estimate is extremely conservative for this operation.

22. Verizon next claims that it will typically take ***BEGIN VERIZON PROPRIETARY *** END VERIZON PROPRIETARY *** minutes to test the manhole for combustible gases. That test involves dropping a very small diameter hose down through the manhole opening, pumping an aspirator bulb several times, and reading the indication of a gas meter attached to the hose and aspirator-bulb assembly. This operation is routinely done many times per day in Verizon, and takes less than one minute.

Many of Verizon's remaining estimates are equally flawed. For example, a physical demonstration of the process involved can (and has) demonstrated that Verizon's reported times to open a splice case and actually remove load coils are substantially exaggerated.

Verizon's Estimated Cost for a "Conditioning"-Related Engineering Work Order Is Vastly Overstated.

23. Detailed analysis of Verizon's assumed Engineering Work Order costs reveals that it is possibly even more inflated than the other Verizon "conditioning" study estimates is. Verizon's proposed tasks and task times, along with more reasonable time estimates developed by Mr. Riolo and Mr. John C. Donovan, are listed in the following table and described in detail below. The times that Mr. Riolo and Mr. John C. Donovan developed are stated both in terms of the times that are efficient for Verizon today, making no additional effort, and the forward-looking times that Verizon can achieve by taking basic steps to automate and improve its processes. There are numerous tasks included in Verizon's "Engineering Work Order" charge that would be unnecessary or should be automated in a forward-looking, efficient environment. Mr. Riolo has been a

manager overseeing these tasks, an auditor/reviewer of these functions throughout the former Bell System and a member of various "quality" teams attempting to eliminate inefficiencies in these operations.

24. Based on Mr. Riolo's analysis, we believe that what Verizon claims takes *****BEGIN VERIZON PROPRIETARY ********** ******** *** END VERIZON PROPRIETARY***** should take no more than approximately one hour of work, in its entirety, using efficient, forward-looking techniques. As we describe below, some techniques as simple as using a photocopied form with fill-in blanks — let alone using a process with the advantages of the automated flow-through that is achievable with Verizon's current automated support systems such as the Engineering/Construction Records Information System ("ECRIS") – can drastically shorten the times that Verizon has developed by positing inefficient, fully manual processes.

*****VERIZON PROPRIETARY**

END PROPRIETARY***

25. The following discussion goes through each step and task time included in Verizon's total reported cost. No discussion is provided for lines 1 through 18 of the Verizon study as Verizon did not report any relevant time for those activities.

Line 19. Acquire Engineering Work Order ("EWO") Number:

26. The EWO number is a simple serial number for the job and ECRIS could assign it. However, in the past, each engineering group kept a manual ledger containing a block of work order numbers. An engineer literally would take the next number

from the hand-written ledger, sign his/her name, and enter a brief job description. This function takes less than a minute. A forward-looking efficient company would make this serial number assignment part of an automated flow-through process, an operation requiring no human intervention and taking nanoseconds.

27. In other words, irrespective of whether the ECRIS program functions are standardized across all Verizon states or a similar work order administration system is utilized, a forward-looking environment would easily eliminate the need to treat this function manually, and the cost for obtaining a serial type number should be *de minimis*.

Line 20. Prepare field notes and contact telephone numbers:

28. A trip into the field with detailed construction notes is not necessary for a line "conditioning" job at an existing splice point. This function is unnecessary.

Line 21 & Line 22. Design work requirement (e.g., remove bridged tap(s), remove load coil(s) after research of cable plat(s) & draw schematic of work required including outside plant locations:

29. Research of cable plats should not take more than a half-hour for deloading (three to four load locations) and/or unbridging (one to three bridged tap locations), including the time to issue a simple Memo Order or fill in an automated form that would flow through to Construction. As illustrated below, other than typical blanket information contained on a work order, a Memo Order would only require the engineer to populate the cable count information highlighted below for a Deloading Splice.

MEMO ORDER

LOCATION: P. 12 MAIN STREET, ANYTOWN

WORK OP: DELOAD 25X

	OLD	NEW
IN COUNT	1234, 1-300	SAME
OUT COUNT	1234, 1-300	SAME
LATERAL	1234, 101-200	SAME
LCC	1234, 201-300	1234, 201-275 + 25 XD

30. A Bridged Tap Removal Splice is very similar:

MEMO ORDER

LOCATION: P. 12 MAIN STREET, ANYTOWN

WORK OP: REMOVE 25X BRIDGED TAP

	OLD	NEW
IN COUNT	1234, 1-300	SAME
OUT COUNT	1234, 1-300	SAME
LATERAL	1234, 101-200	1234, 101-175 + 25 XD
LCC	1234, 201-300	SAME

31. If, for some reason, the engineer preferred to use a splice drawing, which is not necessary, he or she should simply create a "fill in the blanks" diagram of a 3-way splice and a "fill in the blanks" diagram of a 4-way splice. A deloading or bridged tap splice must be either a 3-way or a 4-way splice, because only two

cables can properly come out of each end of a splice case. Such a 4-way splice template would look like the following:

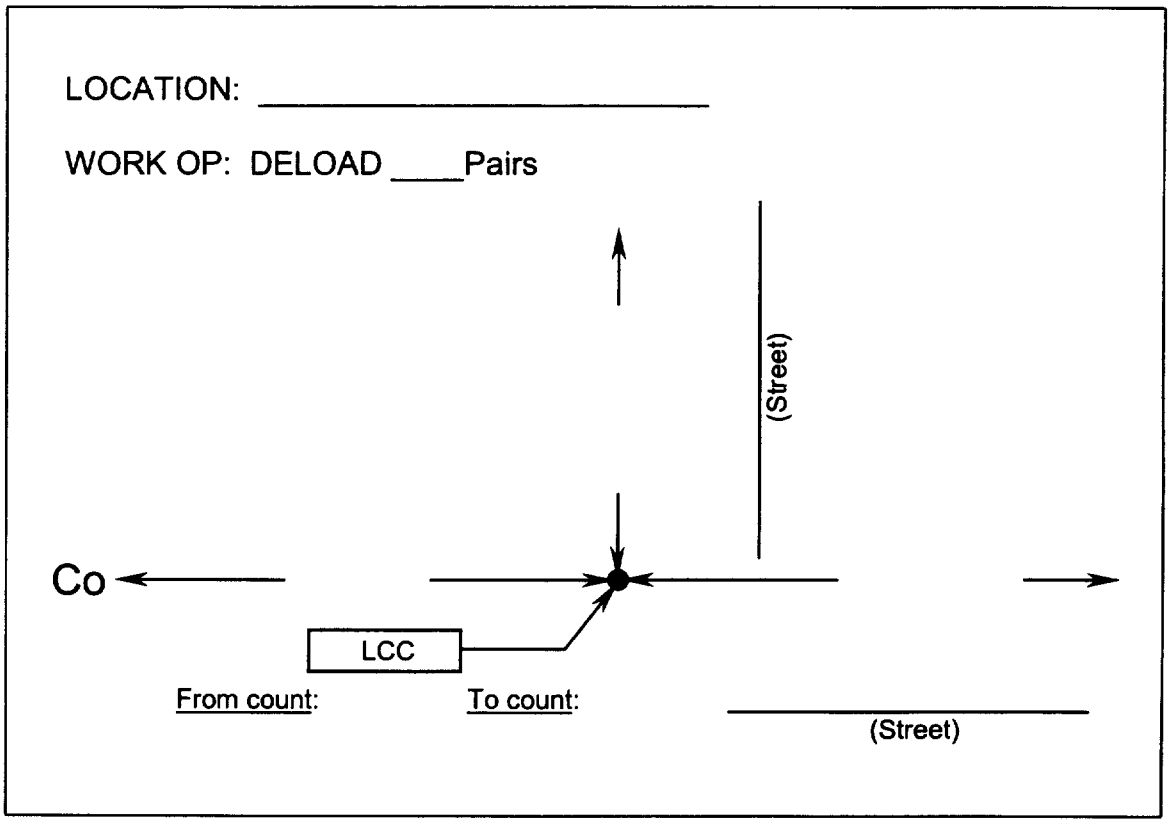

32. A forward-looking efficient company would make this a "fill-in-the-blanks" computer screen that would be part of an automated flow-through process. An engineer or engineering clerk (but not both) would still fill in several of the blanks, but the extent of the manual effort would be minimal, taking just a few short minutes.

33. In other jurisdictions, Verizon has suggested that the engineer must layout the entire route of the cable pair and indicate the change at every splice point for record keeping purposes. The reality is that the engineers need only treat the cable pair where physical work will be performed, *i.e.*, at each the load points

(presumably 2 - 4 locations) and/or each bridged-tap location (potentially 1 – 3 locations) and/or sometimes at the termination points. The work required is significantly less than the myriad locations per mile that Verizon would lead one to believe must be addressed. Personnel are well versed on following the count changes required for posting/pre-posting records perform this function. Therefore, the time required is not substantial. Relative to forward-looking and efficient practices, we are aware that BellSouth has recently described that its mechanized record system "Map Viewer" can generate the information described in this task in less than a minute for any cable pair in the State of Florida.

Line 23. Check for and obtain any necessary permits:

34. Deloads and unbridging in the underground and aerial plant do not require special permits. In other jurisdictions Verizon has attempted to justify the time reported for obtaining permits to perform conditioning work. Contrary to Verizon's efforts to suggest that this is a common occurrence, throughout his extensive career, which includes work in plant locations in each of the former Bell System entities, Mr. Riolo recalls only one location that required an opening permit (for a manhole buried and covered in Central Park in Manhattan). Although the need for a permit to perform conditioning work is possible, it is a rare exception, certainly not a normal requirement. Engineers design plant to be accessible, and only when no reasonable alternative exists would they place plant in areas that require special permits.

Line 24. Order equipment (if required) and update TIRKS (if appropriate):

35. This is an error. Deloads and unbridging of POTS lines require no extraordinary equipment, and POTS lines are not inventoried in TIRKS. Although Verizon has previously indicated this item is for equipment "**if required**" and for TIRKS "**if appropriate**," the cost has still been charged 100 percent of the time. Moreover, the cost has been charged to line "conditioning," in error, because this task is *never* required.

Line 25 and 26. Send schematic to Engineering Clerk for drafting of work print and preposting of cable plat(s). Receive schematic from engineer for drafting:

36. This step is probably unnecessary because the services of a drafter are not required for a simple deload or bridged tap removal splice. Even if the step were required, Verizon's proposed time for the engineer to hand the schematic to the drafter and offer minor explanations/directions is absurd. One minute might be more appropriate. A forward-looking efficient company would have automated step 22, which would make this function unnecessary.

Line 27. Complete the work print:

37. As indicated above, for a deload/unbridging job, the drawing involves only displaying a simple line diagram, symbols, cable number and count, and template type information. The work order can literally take the form of a memo. A forward-looking efficient company would have automated step 22, which would make this function unnecessary.

Line 28. Pre-post cable plat(s):

38. Pre-posting minor numbers of locations in connection with deload or unbridging involves bracketing the cable pair affected and showing its change status to non-loaded. If Verizon is responsive to competitors, the line "conditioning" will occur so quickly that the job will be completed fast enough to go directly to a final posting of the change. A forward-looking efficient company would have automated step 22, which would make this function unnecessary.

Line 29. Update LFACS and LIVEWIRE:

39. Updating LFACS and LIVEWIRE in connection with deloading or unbridging requires changing the status of the pair or the termination — a function that should take very few minutes. A forward-looking efficient company would make this a flow-through, automated function, triggered when the technician keys in a *"Completed Step"* on a *Craft Access Terminal*, thereby requiring no human intervention.

Line 30/31. Forward completed work product to Engineer. [Engineer] review[s] final design from drafting:

40. The engineer receives the work print and reviews the deload/unbridge job. The line "conditioning" change is merely scan-checked by the engineer. This is not a complex engineering work order. A forward-looking efficient company would have automated step 22, which would make this function unnecessary.

Line 32. Acquire necessary and appropriate approval:

41. This type of simple job is normally authorized directly by the engineer herself or himself. At most, such a routine work order would require no more than simply the group manager's signature. This step is unnecessary.

Line 33. Schedule work with Construction:

42. Work may be scheduled on a regular routine basis, or it can be service order work done immediately. A deload/unbridging work order is service order work requiring immediate attention, not placement on a 30-60-90-day routine construction workload. This step is unnecessary.

Line 34. Send copies of engineering work order to Construction and Accounting:

43. If 30-60-90-day construction scheduling was appropriate (which it is not), then this step would come before step 33, because work would not be scheduled until after the print was received. Even in a cumbersome manual mode, it does not take 20 minutes to fax a Memo Order or Service Order Job to Construction. Also an error is the transmittal to the Accounting department, which does not receive copies of 'M' (rearrangement) work, but should only receive copies of jobs involving the disbursement or retirement of non-exempt capital assets. A forward-looking efficient company would make this work distribution function part of an automated flow-through process, thereby requiring no human intervention.

Line 35. Receive completion notice from Construction:

44. Unless there are questions raised about the job, the notification of job completion flows automatically to engineering via ECRIS. In addition, the scheduling engineer is notified at the scheduling meeting of completed work.

Line 36. Complete and forward billing information to Special Billing Unit:

45. This step is unnecessary because this proceeding will establish a fixed price for line "conditioning." This type of function is only required for custom work orders, and even then each work force codes its time (and materials if applicable) for billing preparation.

Line 37. Receive completion notice from Construction and final post the work order on the cable plat(s):

46. The receiving of a "completion notice" should simply be an electronic notification of completion via ECRIS. If the work was not pre-posted, then it takes only a few minutes to post the records. Otherwise, if the work is already pre-posted (see line 25), final posting is a relatively minor task.

Line 38. Send final completion notice to Accounting (Assets):

47. This is a mistake. This is 'M' (rearrangement) work that is not sent to the Accounting department. There are no assets (Items of Plant) changed on the books of the corporation. Although Verizon correctly indicates this item is only for [new] Assets, Verizon has still charged the cost to line "conditioning," in error.

48. Should the Commission decide to compensate Verizon for an engineering cost associated with "conditioning" loops, the Commission should recognize that an efficient company would only need to issue one Engineering Work Order for each job to "condition" multiple loops. Thus, at most, the Commission should only allow Verizon to recover the restated Engineering Work Order cost on a "per unit basis," with the cost spread across the average number of loops to be "conditioned" per order. Based on a hypothetical labor rate of $45 per hour, the

Engineering Work Order would add from $0.90/pair to $1.86/pair ($45 per hour multiplied 1.2 and 2.48 minutes per pair, respectively) for removing load coils and from $0.45/pair to $0.93/pair for removing bridged tap ($45 per hour multiplied 0.6 and 1.24 minutes per pair, respectively).

I, Terry L. Murray, hereby swear and affirm that the foregoing rebuttal testimony was prepared by me or under my direct supervision or control and is true and accurate to the best of my knowledge and belief.

Signed:

Terry L. Murray

I, Richard J. Walsh hereby swear and affirm that the foregoing rebuttal testimony was prepared by me or under my direct supervision or control and is true and accurate to the best of my knowledge and belief.

Signed:

I, Joseph P. Riolo, hereby swear and affirm that the foregoing rebuttal testimony was prepared by me or under my direct supervision or control and is true and accurate to the best of my knowledge and belief.

Signed:

Exhibit AT&T/WCOM NRCM-1
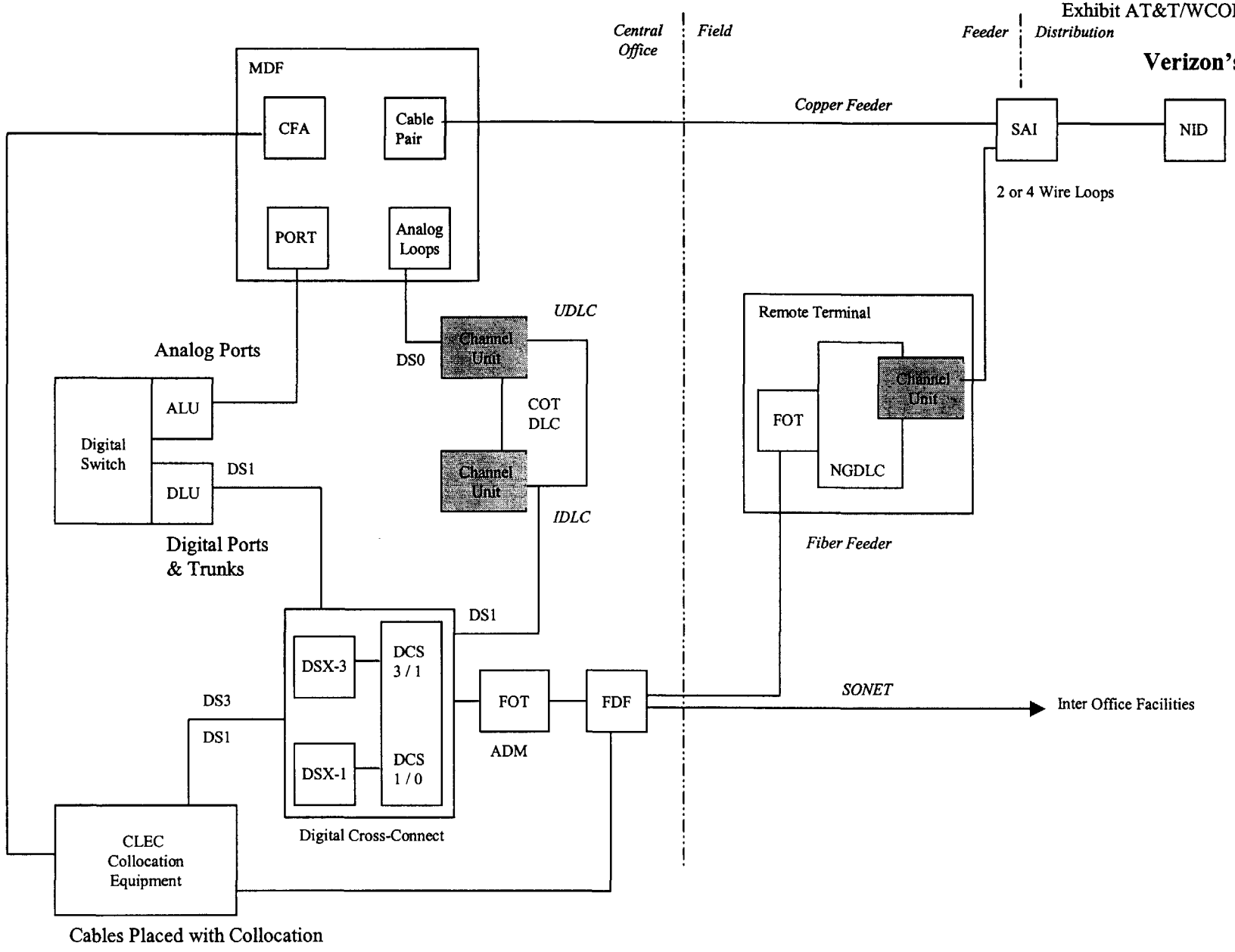
Verizon's Network