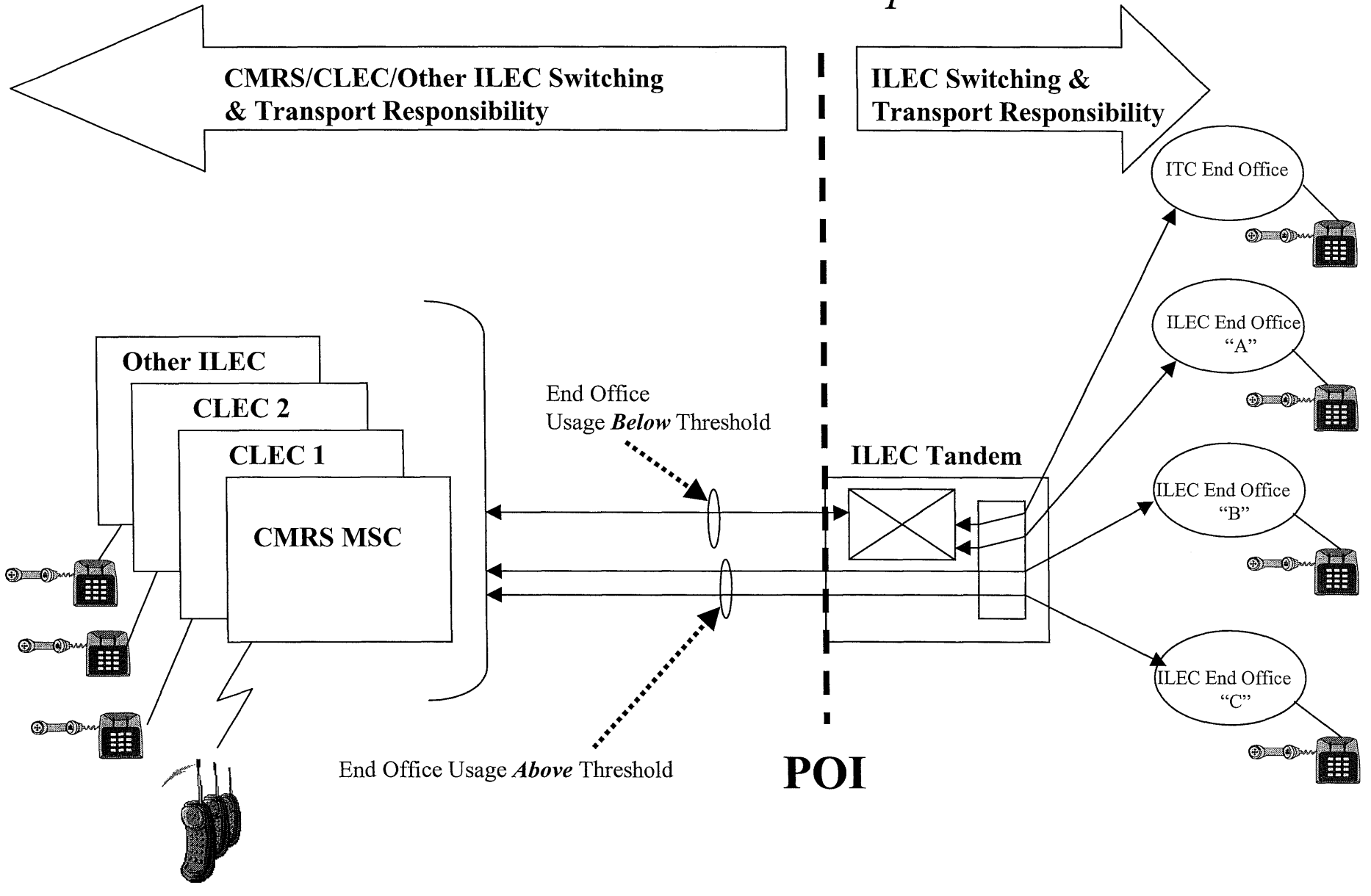Verizon Interconnection Architecture Proposal