EXHIBIT A

TR 72580
Issue 1, January 1997

Bell Atlantic Technical Reference

Analog Unbundled Port Services Technical Specifications

© 1997 Bell Atlantic Network Services, Inc.
All Rights Reserved
Printed in U.S.A.

Bell Atlantic Network Services, Inc.
Technical Reference

TR 72580
Issue 1, January 1997

Notice

This Technical Reference is published by Bell Atlantic to provide a technical description of Analog Unbundled Port Services. To the extent feasible, the description references or duplicates existing published technical references utilized by the industry.

Bell Atlantic reserves the right to revise this technical reference for any reason including, but not limited to, changes in tariffs, laws, or regulations, conformity with updates and changes in standards promulgated by various agencies, utilization of advances in the state of technical arts, or the reflection of changes in the design of any facilities, equipment, techniques, or procedures described or referred to herein. Liability for difficulties arising from technical limitations or changes herein is disclaimed.

Bell Atlantic reserves the right not to offer any or all of these services and to withdraw any or all of them at any future time. In addition, the services described herein are based on available facilities and equipment and may not be universally available.

With respect to services offered pursuant to tariff, however, the terms and conditions of the service offering are determined by the tariff itself and applicable laws and regulations. This reference is intended to be supplemental to the tariffs. In the event of a conflict between the tariffs, laws or regulations and this reference, the tariffs, laws, and regulations shall govern.

For additional copies, please contact:

Bell Atlantic Document and Information Delivery Services
1310 N. Court House Road
Arlington, VA 22201
703-974-5887

For information about the technical specifications in this TR, contact:

Trone Bishop
1 East Pratt St.
Baltimore, Md. 21202
410-736-7622

EXHIBIT A

Bell Atlantic Network Services, Inc.
Technical Reference

TR 72580
Issue 1, January 1997

Bell Atlantic Technical Reference
Analog Unbundled Port Services
Technical Specifications

Contents **Page**

1.	General		1
2.	Service Description		1
3.	Service Elements		6
	A.	General	6
	B.	CODF Wiring and Tie Cable(s)	6
	C.	Bell Atlantic Local Switching System CO Cabling	6
	D.	Local Switching System Analog Ports	7
4.	Service Specifications		7
5.	OTC Equipment and CO Cabling Requirements		8
	A.	OTC Equipment Requirements	8
	B.	OTC CO Cabling Requirements	9
6.	References		10
	A.	Definitions	10
	B.	Acronyms	12
7.	Bibliography		13

Figures **Page**

Figure 2-1:	Typical Analog Unbundled Port Configuration	2
Figure 2-2:	Unbundled Port Service Elements	3
Figure 2-3:	Requirements Associated with Analog Unbundled Port Services	4
Figure 2-4:	UPS NC Codes	5
Figure 2-5:	UPS NCI Codes	5
Figure 2-6:	Valid Analog UPS NC/NCI Code Combinations	5
Figure 4-1:	Analog UPS Acceptance Limits (AL) and Immediate Action Limits (IAL)	7
Figure 4-2:	Compatible TLP Ranges at the OTC-POT	8
Figure 4-3:	Compatible TLP Ranges at the BA Local Switching System	8

1. General

1.01 This technical reference provides the technical specifications associated with the Analog Unbundled Port Services offered by Bell Atlantic in the co-carrier section of some local exchange tariffs.

1.02 Whenever this technical reference is reissued, the reason(s) for reissue will be provided in this paragraph.

1.03 Analog Unbundled Port Services (UPS) enable Other Telephone Companies (OTC) that are collocated in a Bell Atlantic (BA) Central Office (CO) to connect to analog switch ports on BA local switching systems. The analog switch ports provide access to the functionality of the switch including supervisory signaling, digit reception and transmission, routing, rating, usage, as well as other line or trunk features.

1.04 The technical specifications in this document assume that the OTC is collocated in the same CO as the analog UPS. In the future, BA may offer transport services for analog UPS. In that case, the technical specifications associated with the transport service will supersede those in this document where applicable.

2. Service Description

2.01 The service description, terms and conditions, prices, and Universal Service Order Codes (USOCs) for analog UPS are contained in applicable tariffs or contracts.

2.02 Analog UPS are provided subject to availability on a first-come first-served basis. Special construction charges apply when appropriate facilities are not available.

2.03 Analog UPS vary according to the type of switch port (interface) and the services desired. This document contains the technical specifications associated with the analog switch port. The services associated with the analog switch port are described in applicable tariffs and other technical references.

2.04 Analog ports provide a local switch interface that is suitable for the transmission of analog voice grade signals between approximately 300 and 3000 Hz. Analog ports use various methods of dc supervisory signaling to control call processing.

2.05 The following analog UPS are offered: Basic, Centrex, PBX, and Direct Inward Dialing (DID). The Basic, Centrex, and PBX ports are on the line side of the local switching system and use Loop-Start or Ground-Start signaling. The DID port is on the trunk side of the local switching system and uses Loop Reverse-Battery signaling.

2.06 Basic, Centrex, PBX, and DID ports consist of a 2-wire analog interface associated with a local switching system and a 2-wire CODF cross-connect between a 2-wire OTC CODF

termination and the CODF termination of the analog port. At each 2-wire interface one conductor is called tip and the other conductor is called ring. A typical analog port configuration is shown in Figure 2-1.

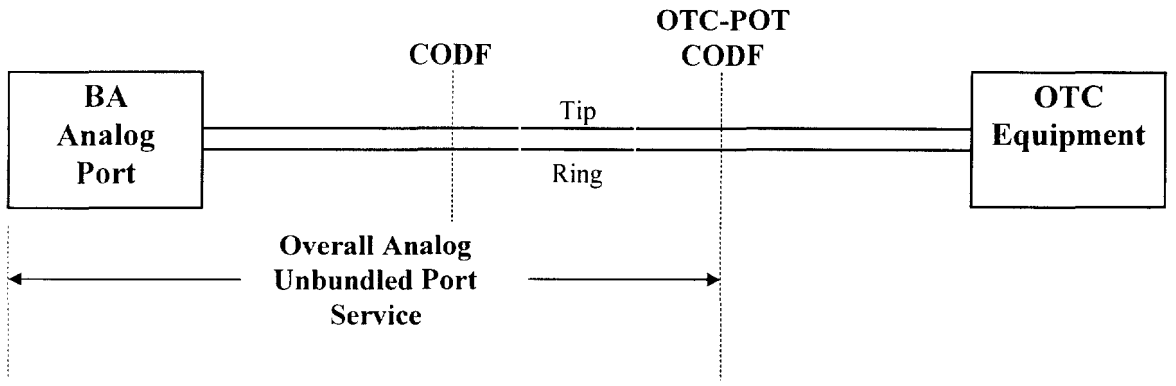

Figure 2-1. Typical Analog Unbundled Port Configuration

2.07 An analog UPS ordinarily consists of the following elements (see Figure 2-2):

(1) Central Office Distributing Frame (CODF) wire and tie cable(s) between the CODF termination of the OTC equipment and the CODF termination of the BA analog switch port;

(2) CO cabling between the CODF and the BA analog switch port; and,

(3) an analog switch port on a BA local switching system that is either;

(a) a loop-start line-side port (LSLS);
(b) a ground-start line-side port (GSLS); or,
(c) a loop reverse-battery trunk-side port (LRTS). The LRTS port is either;

(I) an LRTS port on the trunk-side of a local switching system; or,
(II) an LRTS port on a digital channel bank in the same building that has a high capacity connection (such as DS1) to the local switching system.

(4) Each LSLS or GSLS port has the following basic characteristics and capabilities:

(a) an associated telephone number;
(b) Dial Pulse (DP) or Dual Tone Multi-Frequency (DTMF) address signaling;
(c) access to local calling within the minimum BA-defined local calling area for each rate center;
(d) basic intercept;
(e) one primary directory listing;
(f) PIC1 and PIC2 access;

(g) access to 911;
(h) access to call routing, switch usage, and recording capability.

(5) Each LRTS port has the following basic characteristics and capabilities:

(a) one way call routing from the BA local switching system to the OTC for associated telephone numbers;
(b) DP, DTMF, or MF address signaling;
(c) access to call routing and switch usage capabilities.

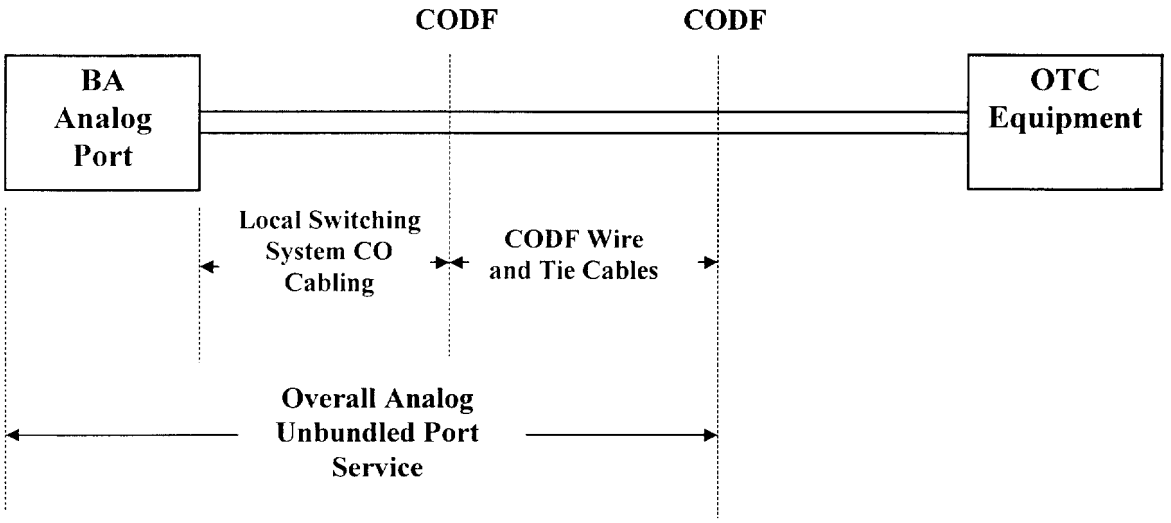

Figure 2-2. Unbundled Port Service Elements

2.08 The requirements for the BA unbundled port service elements are provided in Section 3 of this technical reference. The overall service requirements are specified in Section 4. Section 5 provides OTC equipment and cabling specifications. Figure 2-3 shows the requirements associated with unbundled port services.

2.09 The Basic line-side port is suitable for single line residential or business service. Unless the OTC requests ground-start supervisory signaling or DP address signaling at the time the service is ordered, the Basic port will be provided with loop-start supervisory signaling and DTMF address signaling capabilities. DP address signaling can be used on a port that is arranged for DTMF signaling.

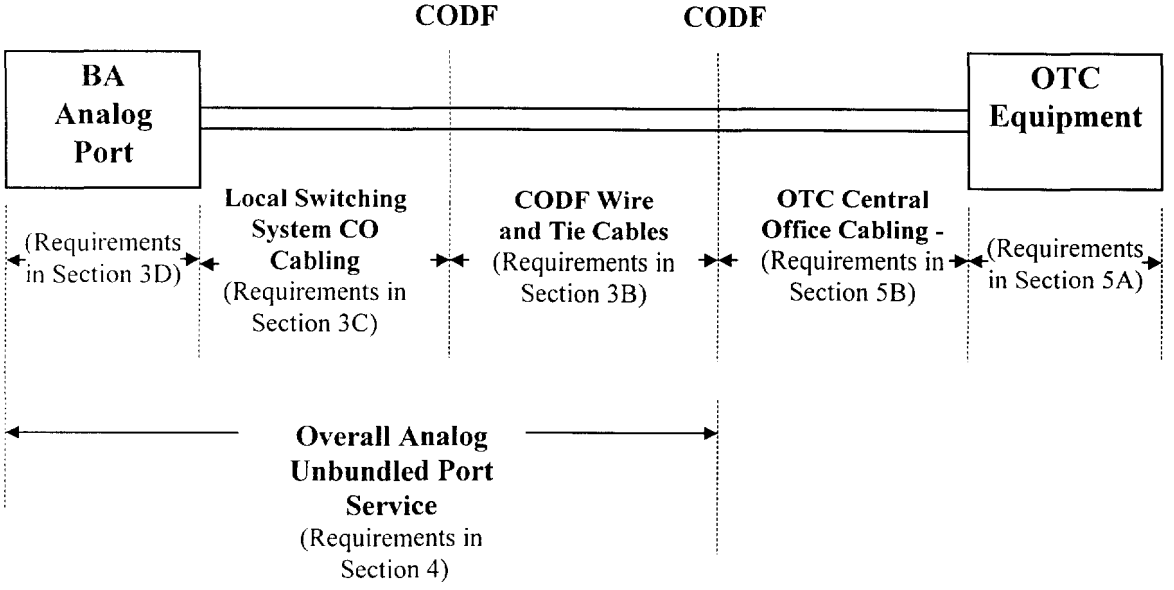

Figure 2-3. Requirements Associated with Analog Unbundled Port Services

2.10 The Centrex port is suitable for Centrex line service. Unless the OTC requests ground-start supervisory signaling or DP address signaling at the time the port is ordered, the Centrex port will be provided with loop-start supervisory signaling and DTMF address signaling capabilities. DP address signaling can be used on a port that is arranged for DTMF signaling.

2.11 The PBX port is suitable for Private Branch Exchange (PBX) Central Office trunks. Unless the OTC requests loop-start supervisory signaling or DP address signaling at the time the port is ordered, the PBX port will be provided with ground-start supervisory signaling and DTMF address signaling. DP address signaling can be used on a port that is arranged for DTMF signaling.

2.12 The DID port is suitable for one-way Direct Inward Dialing (DID) trunks. Loop reverse battery is the only supervisory signaling available. Unless the OTC requests DTMF or MF address signaling at the time the port is ordered, the DID port will be provided with DP address signaling.

2.13 The following list of supplementary features are some of the features that are available on line-side ports where technically feasible. Detailed feature lists by switch port type will be provided by the product manager.

- Additional listings
- Operator services
- Directory assistance
- Call Blocking (customer or OTC activated)
- Caller ID (calling number delivery)
- Speed calling

- 3-Way calling
- Call Waiting
- Call Forwarding (including Call Forwarding Busy and No Answer)
- Early fraud warning
- Hunt group arrangements
- Usage recording and daily usage tapes indicating the to and from number and start and stop time by port
- Simplified Message Desk Interface data link
- Routing options

2.14 All analog UPS services use the SN network channel (NC) code. Additional NC option codes are shown in Figure 2-4.

2.15 Network Channel Interface (NCI) codes describe the type of OTC signaling. Valid analog NCI codes are shown in Figure 2-5.

2.16 Valid analog NC/NCI code combinations are shown in Figure 2-6.

Figure 2-4: UPS NC Codes

NC Code	Character 3	Character 4
SN	A (2-wire)	L (line-side port) T (trunk-side port)

Figure 2-5: UPS NCI Codes (see note)

NCI Code	Description
02QC3.OOE	Loop-start signaling - Closed End
02QC3.OOC	Ground-start signaling - Closed End
02QC3.RVT	Loop Reverse-Battery Terminating Signaling

Note: NCI codes describe the function performed by the connecting OTC equipment not the function of the unbundled port service. For example, an LSLS port performs the open end function of an access line and connecting OTC equipment performs the closed end function.

Figure 2-6: Valid analog UPS NC/NCI Code Combinations

Unbundled Port Service	NC Code	NCI Code
LSLS	SNAL	02QC3.OOE
GSLS	SNAL	02QC3.OOC
LRTS	SNAT	02QC3.RVT

3. Service Elements

A. General

3.01 Three elements are always used with analog Unbundled Port Services. They are: Central Office Distributing Frame (CODF) wire and tie cable(s), BA local switching system CO cabling, and a BA local switching system port. The following sections contain the specifications for each of these elements.

B. CODF Wiring and Tie Cable(s)

3.02 CODF cross-connect wiring and tie cable(s) are used to link the CODF termination of OTC equipment to the CODF termination of the BA local switching system port.

3.03 The total combined length of all CODF cross-connect wiring and all CODF-to-CODF tie cables used for analog UPS should be less than 1500 feet.

3.04 The direct-current resistance of the CODF wiring and tie cable used for analog UPS should be less than 80 ohms. This is equal to 1500 or less feet of 24 gauge cable.

3.05 The 1kHz loss of the CODF wiring and tie cable used for UPS, when measured between 900 ohm impedances, should be less than .5 dB.

3.06 The C-message noise measured on the CODF wiring and tie cables used for analog UPS shall be 20 dBrnC or less when measured between 900 ohm impedances..

C. Bell Atlantic Local Switching System CO Cabling

3.07 The voice grade CO cabling used to terminate BA Local Switching System ports on the CODF shall use twisted-pair conductors.

3.08 The type, gauge, and length of the BA CODF cabling shall be specified based on this specification and BA equipment vendor requirements. If the specifications in this document differ from the equipment manufacturers specifications, then the more stringent of the two shall be used.

3.09 The direct-current resistance of the CO cabling between the BA local switching system port and the CODF shall meet the CO cabling requirements in the Bellcore FR-TSY-000064 [1] (i.e., 23 ohms or less). This is equivalent to 275 feet or less of 26 gauge cable, 440 feet or less of 24 gauge cable, and 700 feet or less of 22 gauge cable.

3.10 The 1kHz loss of the CO cabling between the BA local switching system port and the CODF, when measured between 900 ohm impedances, shall be less than .15 dB.

3.11 The C-message noise measured on the CO cabling between the BA local switching system port and the CODF shall be 20 dBrnC or less.

D. Local Switching System Analog Ports

3.12 Bell Atlantic currently offers three different local switching system analog ports. They are: (1) the loop-start line-side (LSLS) port, (2) the ground-start line-side (GSLS) port, and (3) the loop reverse-battery terminating (LRTS) trunk-side port.

3.13 The impedance of the local switching system analog port is based on the type of local switching system. Most BA local switching system ports have a nominal 900 ohms + 2.16uF impedance, however some switching system ports have a nominal impedance of 800 ohms in parallel with 0.05 uF and 100 ohms.

3.14 Line-side analog ports shall provide 20 mA or more of loop current when terminated by a direct-current resistance of between 430 ohms and 1730 ohms.

3.15 The C-message noise measured on the analog port shall be 20 dBrnC or less.

3.16 The C-Notched noise measured on the analog port shall be 45 dBrnC or less with a -13 dBm0 1004 Hz holding tone.

3.17 Signaling on the LSLS (02QC3.OOE) and GSLS (02QC3.OOC) ports shall conform to the network specifications in ANSI T1.401-1993 [2].

3.18 Signaling on the LRTS (02QC3.RVT) port shall conform to the network specifications in ANSI T1.405-1996 [3].

4. Service Specifications

4.01 The overall end-to-end analog UPS service is from the CODF termination of the OTC equipment (OTC-POT) to the BA local switching system port (See Figure 2-1).

4.02 Analog UPS should meet the limits in Figure 4-1, 4-2, and 4-3 when measured at the BA local switching system test position. Parameters are usually tested in response to trouble reports or when additional testing is purchased.

Figure 4-1: Analog UPS Acceptance Limits (AL) and Immediate Action Limits (IAL)

Parameter	AL	IAL
Loss	< 1.0 dB	> 1.5 dB
Resistance	< 100 ohms	> 100 ohms
C-Message Noise	< 30 dBrnC0	> 30 dBrnC0
LSLS & GSLS Loop Current	> 20 mA	< 20 mA

4.03 Signaling on the LSLS (02QC3.OOE) and GSLS (02QC3.OOC) ports shall conform to the network specifications in ANSI T1.401-1993 [2]. Signaling on the LRTS (02QC3.RVT) port shall conform to the network specifications in ANSI T1.405-1996 [3].

4.04 Compatible TLP ranges are shown in Figures 4-2 and 4-3.

Figure 4-2: Compatible TLP Ranges at the OTC-POT

Specified NCI Code	OTC Transmit TLP [1]	OTC Receive TLP [2]
02QC3.OOE, 02QC3.OOC	0.0 to -8.0 [0.0]	0.0 to -1.0
02QC3.RVT	-2 to -3.5 [-3.5]	0.0 to -1.0

Figure 4-3: Compatible TLP Ranges at the BA Local Switching System

Specified NCI Code	BA Transmit TLP	BA Receive TLP
02QC3.OOE, 02QC3.OOC	0.0	0.0 to -8.0
02QC3.RVT	0.0	-2 to -4 [3]

5. OTC Equipment and CO Cabling Requirements

A. OTC Equipment Requirements

5.01 Collocated OTC equipment used for interconnection with analog UPS shall meet all of the applicable generic equipment requirements in GR-63-CORE [4] and GR-1089-CORE [5].

5.02 Collocated OTC equipment shall be manufactured in accordance with FCC, NEC, UL, and USDL requirements and orders applicable to Federal, State, and local requirements including, but not limited to, statutes, rules, regulations, orders, or ordinances, or otherwise imposed by law. Where requirements are not specified in this document, contractual technical requirements, or other applicable documents, the manufacturer's requirements consistent with industry standards shall be met.

---

[1] The OTC transmit TLP is normally specified by the OTC. When the OTC transmit TLP is not specified, the bracketed [ ] value denotes the default TLP.

[2] The OTC receive TLP will be a function of the BA transmit TLP (0.0) and the total loss of the BA port, BA CO cabling, and BA CODF wiring. The average OTC receive TLP is -0.5 dBm and the level cannot be adjusted.

[3] When the LRTS port is an analog trunk circuit, the BA receive TLP will be a function of the OTC transmit TLP and the total loss of the BA CO cabling, the BA CODF wiring, and the BA LRTS port. The average total loss of the BA CO cabling, BA CODF wiring, and BA port is about 0.5 dB and the BA receive TLP cannot be adjusted by BA. When the LRTS port is on a channel bank that has a high capacity connection to the BA Local Switching System, the BA receive TLP is obtained by Local Switching System translations and is always -4.0.

5.03 The open circuit tip-to-ring dc voltage that collocated OTC equipment applies to BA VF cabling shall be less than 80 Vdc.

5.04 Collocated OTC equipment shall not deliver more than 2.5 watts of power to any load via BA VF cable.

5.05 Collocated OTC load equipment shall not draw more than 100 mA of loop current from LSLS and GSTS ports and shall not deliver more than 100mA of loop current to any LRTS port.

5.06 The noise limits for analog UPS are predicated on the OTC equipment having a longitudinal balance of > 60 dB when measured using the methods and equipment specified in ANSI/IEEE 455-1984 [6].

5.07 The loss and noise limits for analog UPS are predicated on collocated OTC equipment having a nominal impedance of 900 ohms when measured using the methods and equipment in ANSI/IEEE 743-1995 [7].

5.08 The applied power level of any transmitted signal averaged over 3 seconds shall not exceed -12 dBm0.

5.09 The signaling characteristics of OTC equipment associated with LSLS and GSLS ports shall conform to the loop-start and ground-start customer installation specifications in ANSI T1.401-1993 [2].

5.10 The signaling characteristics of OTC equipment associated with LRTS ports shall conform to the loop reverse battery customer installation specifications in ANSI T1.405-1996 [3].

B. OTC CO Cabling Requirements

5.11 The voice grade CO cabling used to terminate OTC equipment on the CODF for interconnection with analog UPS shall use twisted-pair conductors.

5.12 The type, gauge, and length of the OTC CODF cabling shall be specified based on this specification and OTC equipment requirements. If the specifications in this document differ from the OTC equipment manufacturers specifications, then the more stringent of the two shall be used.

5.13 The direct-current resistance of the CO cabling between the OTC equipment and the CODF shall meet the CO cabling requirements in the Bellcore FR-TSY-000064 [1] (i.e., 23 ohms or less). This is equivalent to 275 feet or less of 26 gauge cable, 440 feet or less of 24 gauge cable, and 700 feet or less of 22 gauge cable.

5.14 All CO cabling between OTC equipment and the CODF shall be equipped with connectors at each end. The type of connectors shall be specified by the CO Engineer.

5.15 The 1kHz loss of the CO cabling between the OTC equipment and the CODF, when measured between 900 ohm impedances using the methods and equipment specified in ANSI/IEEE 743-1995 [7], shall be less than .15 dB.

5.16 The C-message noise measured on the CO cabling between the OTC equipment and the CODF, when measured between 900 ohm impedances using the methods and equipment specified in ANSI/IEEE 743-1995 [7}, shall be 20 dBrnC or less.

6. References

A. Definitions

Central Office (CO)
A telephone company building which houses equipment and facilities used to provide switched access services.

Central Office Distributing Frame (CODF)
Framework located in a CO that holds wire cross-connects which are used to interconnect cable terminations for end-user customer loops, switching system ports, and inter-office facilities.

Closed end
The closed end of an access line is the end of the access line that is not switched. The closed end connects to CPE or OTC equipment that functions as terminal equipment.

C-Message Noise
The frequency-weighted, short-term average noise within an idle channel. The frequency weighting, called C-message, is used to account for the variations in 500-type telephone set transducer efficiency and end-user annoyance to tones as a function of frequency.

C-Notched Noise
The C-message frequency-weighted noise on a channel with a holding tone that is removed at the measuring end through a notch (very narrow band) filter.

dBm
A unit for expression of power level in decibels relative to one milliwatt.

dBm0
Power level referred to, or measured at, a zero transmission level point (0TLP).

dBrn
A unit used to express noise power relative to one picowatt (-90 dBm).

dBrnC
Noise power measured with C-message weighting expressed in dBrn.

dBrnC0
Noise power in dBrnC referred to, or measured at, a zero transmission level point (0TLP).

Decibel (dB)
The logarithmic unit of signal power ratio most commonly used in telephony. It is used to express the relationship between two signal powers, usually between two acoustic, electric, or optical signals; it is equal to ten times the common logarithm of the ratio of the two signal powers.

Dial Pulse (DP)
A type of switched access line address signaling that uses rapid loop open and loop closure signals (pulses) to indicate the digit being dialed. The digits 1 through 9 are represented by the same number of pulses and the digit zero is represented by ten pulses.

Dual Tone Multi-Frequency (DTMF)
A type of switched access line address signaling that uses two tones transmitted simultaneously to indicate a digit (0 to 9) or character (* or #).

Ground-Start (GS) signaling
A type of switched access line supervisory signaling in which the network provides a battery source. To initiate a call, CPE or OTC equipment provides a ground on the ring lead. The ring ground causes dc current to flow which the local switching system will detect as a request for service. On terminating calls, CPE or OTC equipment will provide an off-hook loop closure that is recognized as an answer signal.

Line-side
That part of a local switching system that interfaces access lines.

Local switching system
A system that establishes connections between access lines and connections between access lines and interoffice trunks. Access line ports are located on the line-side of the local switching system and trunk ports are located on the trunk-side of the local switching system.

Loop reverse-battery signaling
A type of switched access line supervisory signaling that uses loop-open and loop-closure signals to indicate on-hook and off-hook signals in one direction and normal battery polarity and reverse battery polarity to indicate on-hook and off-hook signals in the other direction. The end of the service that generates loop open and loop closure signals is called the originating end and the other end which generates the normal battery polarity and reverse battery polarity signals is called the terminating end. For LRTS and other DID-type ports, the local switching system is the originating end and the CPE or OTC equipment is the terminating end. The interface code for such applications represents the function performed by the CPE or OTC equipment (02QC3-RVT).

Loop-Start (LS) signaling
A type of switched access line signaling in which the network provides a battery source. To initiate and maintain a call, CPE or OTC equipment will provide an off-hook loop closure. The loop

closure causes dc loop current to flow which the local switching system will recognize as a service request. On terminating calls, CPE or OTC equipment will provide an off-hook loop closure that is recognized as an answer signal.

Open end
The open end of an access line is the end of the access line that connects to the local switching system port. The open end can be switched to other line or trunk ports associated with the same local switching system.

Other Telephone Company (OTC)
An organization that provides telecommunications services to the public.

Trunk-side
That part of a local switching system that interfaces interoffice trunks.

Unbundled Port
A physical termination (port) on a switching system that provides access to and from the public switched telephone network.

Voice Grade (VG)
A term used to describe a channel, circuit, facility, or service that is suitable for the transmission of speech, digital or analog data, or facsimile, generally with a frequency range of about 300 to 3000 Hz.

B. Acronyms

AL	acceptance limit
ANSI	American National Standards Institute
BA	Bell Atlantic
CO	central office
CODF	central office distributing frame
CPE	customer premises equipment
DID	Direct Inward Dialing
DP	dial pulse
DS1	digital signal level one
DTMF	dual tone multi-frequency
GS	ground-start
GSLS	ground-start line-side
FCC	Federal Communications Commission
IAL	immediate action limit
IEEE	International Electrical and Electronic Engineers
LRB	loop reverse-battery
LRTS	loop reverse-battery trunk-side
LS	loop-start
LSLS	loop-start line-side

NC	network channel
NCI	network channel interface
NEC	National Electric Code
OTC	Other Telephone Company
PBX	Private Branch Exchange
PIC1	primary interconnect carrier one
PIC2	primary interconnect carrier two
POTS	plain ordinary (analog) telephone service
UL	Underwriter's Laboratory
UPS	Unbundled Port Service
USDL	United States Department of Labor
USOC	Universal Service Order Code
VF	voice frequency
VG	voice grade

7. Bibliography

1- Technical Reference FR-NWT-000064, LATA Switching Systems Generic Requirements (LSSGR), (Bellcore, 1994).

2- American National Standard for Telecommunications - Interface Between Carriers and Customer Installations - Analog Voicegrade Switched Access Lines Using Loop-Start and Ground-Start Signaling, ANSI T1.401-1993.

3- American National Standard for Telecommunications - Network-to-Customer Installation Interfaces - Direct-Inward-Dialing Analog Voice grade Switched Access Using Loop Reverse-Battery Signaling, ANSI T1.405-1996.

4- Generic Requirements GR-63-CORE, Network Equipment-Building System (NEBS) Requirements: Physical Protection, Issue 1, (Bellcore, October 1995).

5- Generic Requirements GR-1089-CORE, Electromagnetic Compatibility and Electrical Safety - Generic Criteria for Network Telecommunications Equipment, Issue 2 (Bellcore, November 1994).

6- ANSI/IEEE 455-1984 (R1993), Test Procedure for Measuring Longitudinal Balance of Telephone Equipment Operating in the Voice Band.

7- ANSI/IEEE 743- 1995, Standard Methods and Equipment for Measuring the Transmission Characteristics of Analog Voice Frequency Circuits.

NOTE: These documents are subject to change; references reflect the most current information available at the time of printing. Readers are advised to check the status and availability of all documents.

EXHIBIT B

TR 72585
Issue 1, April 1997

Bell Atlantic Technical Reference

Digital Unbundled Port Services Technical Specifications

© 1997 Bell Atlantic Network Services, Inc.
All Rights Reserved
Printed in U.S.A.

Bell Atlantic Network Services, Inc.
Technical Reference

TR 72585
Issue 1, April 1997

Notice

This Technical Reference is published by Bell Atlantic to provide a technical description of Digital Unbundled Port Services. To the extent feasible, the description references or duplicates existing published technical references utilized by the industry.

Bell Atlantic reserves the right to revise this technical reference for any reason including, but not limited to, changes in tariffs, laws, or regulations, conformity with updates and changes in standards promulgated by various agencies, utilization of advances in the state of technical arts, or the reflection of changes in the design of any facilities, equipment, techniques, or procedures described or referred to herein. Liability for difficulties arising from technical limitations or changes herein is disclaimed.

Bell Atlantic reserves the right not to offer any or all of these services and to withdraw any or all of them at any future time. In addition, the services described herein are based on available facilities and equipment and may not be universally available.

With respect to services offered pursuant to tariff, however, the terms and conditions of the service offering are determined by the tariff itself and applicable laws and regulations. This reference is intended to be supplemental to the tariffs. In the event of a conflict between the tariffs, laws or regulations and this reference, the tariffs, laws, and regulations shall govern.

For additional copies, please contact:

Bell Atlantic Document and Information Delivery Services
1310 N. Court House Road
Arlington, VA 22201
703-974- 5887

For information about the technical specifications in this TR, contact:

Trone Bishop
410-736-7622
Fax 410-736-7622

EXHIBIT B

Bell Atlantic Network Services, Inc.
Technical Reference

TR 72585
Issue 1, April 1997

Bell Atlantic Technical Reference
Digital Unbundled Port Services
Technical Specifications

Contents **Page**

1.	General		1
2.	Service Description		1
	A.	General	1
	B.	Basic Rate ISDN (BRI)	3
	C.	Centrex Basic Rate ISDN (CBRI)	4
	D.	Reserved for future use	4
	E.	Primary Rate ISDN (PRI)	4
	F.	DS1 Message Trunk (DS1MT)	5
	G.	DS1 Direct Inward Dialing (DS1DID)	5
	H.	Network Channel and Network Channel Interface Codes	6
3.	Service Elements		7
	A.	General	7
	B.	CODF Wiring and Tie Cable(s)	8
	C.	DSX-1 Wiring and Tie Cable(s)	9
	D.	Bell Atlantic Local Switching System CO Voice Grade Cabling	9
	E.	Bell Atlantic Local Switching System CO DSX-1 Cabling	10
	F.	BRI and CBRI Local Switching System Ports	10
	G.	PRI, DS1MT, and DS1DID Local Switching System Ports	10
4.	Service Specifications		10
	A.	General	10
	B.	BRI and CBRI	11
	C.	PRI, DS1MT, and DS1DID	11
5.	OTC Equipment and CO Cabling Requirements		13
	A.	OTC Equipment Requirements	13
	B.	OTC CO Cabling Requirements	14
	C.	OTC DSX-1 Cabling Requirements	15
6.	References		15
	A.	Definitions	15
	B.	Acronyms	17
7.	Bibliography		18

Figures **Page**

Figure 2-1:	Typical BRI or CBRI Unbundled Port Configuration	3
Figure 2-2:	Typical PRI, DS1MT, or DS1DID Unbundled Port Configuration	4
Figure 2-3:	DUPS NC Codes	7
Figure 2-4:	DUPS NCI Codes	7
Figure 2-5:	Valid NC/NCI Code Combinations	7
Figure 3-1:	BRI and CBRI Unbundled Port Service Elements	8
Figure 3-2:	PRI, DS1MT, and DS1DID Unbundled Port Service Elements	9
Figure 4-1:	BRI and CBRI Acceptance Limits (AL) and Immediate Action Limits (IAL) for DUPS Ports	11
Figure 4-2:	DS1 Performance Objectives	12
Figure 4-3:	DS1 Test Limits	13
Figure 4-4:	AMI and B8ZS Test Matrix	13

1. General

1.01 This technical reference provides the technical specifications associated with the Digital Unbundled Port Services offered by Bell Atlantic (BA) in the co-carrier section of some local exchange tariffs or via contract.

1.02 Whenever this technical reference is reissued, the reason(s) for reissue will be provided in this paragraph.

1.03 Digital Unbundled Port Services (DUPS) enable Other Telephone Companies (OTC) that are collocated in a BA Central Office (CO) to connect to digital switch ports on BA local switching systems. The digital switch ports provide access to the functionality of the switch including supervisory signaling, digit reception and transmission, routing, rating, usage, as well as other line and trunk features.

1.04 The technical specifications in this document assume that the OTC is collocated in the same CO as the digital UPS. In the future, BA may offer transport services for DUPS. In that case, the technical specifications associated with the transport service will supersede those in this document where applicable.

2. Service Description

A. General

2.01 The service description, terms and conditions, prices, and Universal Service Order Codes (USOCs) for DUPS are contained in applicable tariffs or contracts.

2.02 DUPS are provided subject to availability on a first-come first-served basis. Special construction charges apply when appropriate facilities are not available.

2.03 DUPS vary according to the type of switch port (interface) and the services desired. This document contains the technical specifications associated with the digital switch ports. The services associated with the digital switch port are described in applicable tariffs and other technical references.

2.04 Digital ports provide a local switch interface that is suitable for the transmission of digital signals at the rates specified for each port.

2.05 The following DUPS are currently offered: Basic Rate ISDN (BRI), Centrex Basic Rate ISDN (CBRI), Primary Rate ISDN (PRI), DS1 message trunk interface (DS1MT), and DS1 Direct Inward Dialing (DS1DID). Other port types will be considered upon receipt of a bona-fide request.

2.06 DUPS ordinarily consists of the following elements:

(1) (a) For BRI and CBRI: Central Office Distributing Frame (CODF) wire and tie cable(s) between the CODF termination of the OTC transport equipment and the CODF termination of the BA switch port. (b) For PRI, DS1MT, and DS1DID: Digital Signal 1 Cross-Connect (DSX-1) wire and repeatered tie cable between the DSX-1 termination of the OTC transport equipment and the DSX-1 termination of the BA switch port. (In some cases, an electronic digital cross-connect (EDSX) system can be substituted for the DSX-1.)

(2) CO cabling between the CODF or DSX-1 and the BA Digital switch port; and,

(3) a digital switch port on a BA local switching system that is either;

(a) a line-side Basic Rate ISDN or Centrex Basic Rate ISDN interface;
(b) a line-side[1] DS1 interface for Primary Rate ISDN; or,
(c) a trunk-side DS1 interface for Message Trunks, or Direct Inward Dialing trunks.

2.07 Each DUPS line-side port has the following basic characteristics and capabilities:

- an associated telephone number;
- access to local calling within the minimum BA-defined local calling area for each rate center;
- basic intercept;
- PIC1 and PIC2 (where deployed) access;
- access to 911;
- access to call routing, switch usage, and recording capability.

2.08 Each DS1DID trunk-side port has the following basic characteristics and capabilities:

- One-way call routing from the BA local switching system to the OTC for associated telephone numbers;
- wink-start address control signal;
- DP, DTMF, or MF address signaling;
- access to call routing and switch usage capabilities.

2.09 Each DS1MT trunk-side port has the following basic characteristics and capabilities:

- One-way call routing from the BA local switching system to the OTC for associated telephone numbers, or,
- One-way call routing from the OTC to the BA local switching system for associated telephone numbers:
- SS7 out-of-band signaling, or,

[1] Primary Rate ISDN (PRI) services use a DS1 interface (port) on the local switching system. Depending upon the architecture of the local switching system, the port may be on the line-side or the trunk-side of the local switching system. Since the location of the port has no bearing on the functional characteristics of the port, for the purposes of this technical reference a line-side port is assumed.

- wink-start address control signal with MF address signaling; and ,
- access to call routing and switch usage capabilities.

2.10 The following list of supplementary features are some of the features that are available on line-side ports where technically feasible. Detailed feature lists by switch port type will be provided by the product manager.

- Additional listings
- Operator services
- Directory assistance
- Call Blocking (customer or OTC activated)
- Caller ID (calling number delivery)
- Speed calling
- 3-Way calling
- Call Forwarding (including Call Forwarding Busy and No Answer)
- Hunt group arrangements
- Visual message waiting indicator
- Usage recording and daily usage tapes indicating the to and from number and start and stop time by port

B. Basic Rate ISDN (BRI)

2.11 BRI service consists of a 2-wire line-side port associated with a local switching system and a 2-wire CODF cross-connect between a 2-wire OTC CODF termination and the BRI CODF termination. At each 2-wire interface one conductor is called tip and the other conductor is called ring. A typical BRI port configuration is shown in Figure 2-1.

2.12 The BRI interface provides Line Termination (LT) functionality and utilizes the Two-Binary One-Quaternary (2B1Q) line code operating at 160 kbps that is described in Bellcore technical reference TR-NWT-000393 [1].

2.13 BRI is available in the 2B + D configuration which provides two B channels and one D channel (for signaling). BRI also supports a maintenance channel (M channel).

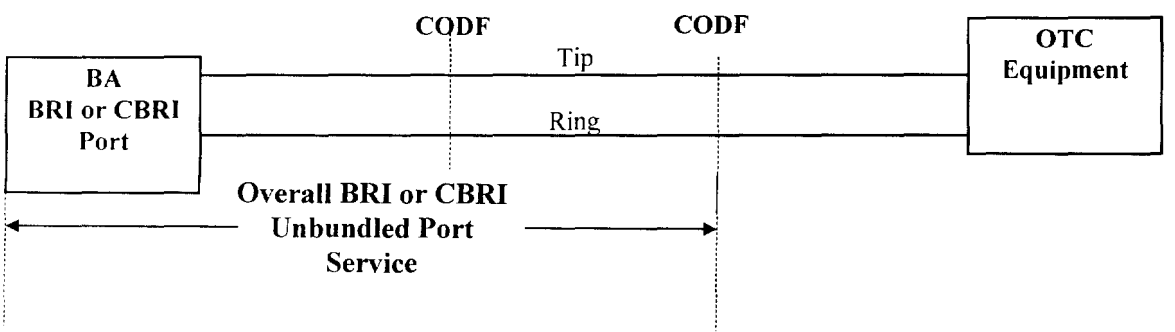

Figure 2-1. Typical BRI or CBRI Unbundled Port Configuration

C. Centrex Basic Rate ISDN (CBRI)

2.14 CBRI service consists of a 2-wire line-side port associated with a local switching system and a 2-wire CODF cross-connect between a 2-wire OTC CODF termination and the CTX BRI CODF termination. At each 2-wire interface one conductor is called tip and the other conductor is called ring. A typical CBRI port configuration is shown in Figure 2-1.

2.15 The CBRI interface provides Line Termination (LT) functionality and utilizes the Two-Binary One-Quaternary (2B1Q) line code operating at 160 kbps that is described in Bellcore technical reference TR-NWT-000393 [1].

2.16 CBRI is available in the 2B + D configuration which provides two B channels and one D channel (for signaling). CBRI also supports a maintenance channel (M channel).

D. Reserved for future use.

E. Primary Rate ISDN (PRI)

2.17 PRI service consists of a 4-wire DSX-1 port associated with a local switching system and the 4-wire DSX-1 cross-connect between the OTC DSX-1 termination and the local switching system DSX-1 termination. A typical PRI port configuration is shown in Figure 2-2.

2.18 PRI ports are DSX-1 interfaces that meet the electrical specifications in ANSI T1.102 [3]. PRI service uses B8ZS line code and the Extended SuperFrame (ESF) Format described in ANSI T1.403 [5].

2.19 PRI is synchronized by the BA local switching system that uses timing that is traceable to a stratum one timing supply. The associated Building Integrated Timing Supply (BITS) meets the 3E specifications in ANSI T1.101 [6].

2.20 PRI is available in several configurations. The 23B + D configuration provides 23 B channels and one D channel (for signaling) that is always assigned to timeslot 24. The 24B configuration provides 24 B channels and signaling is carried over the D-channel of an associated PRI.

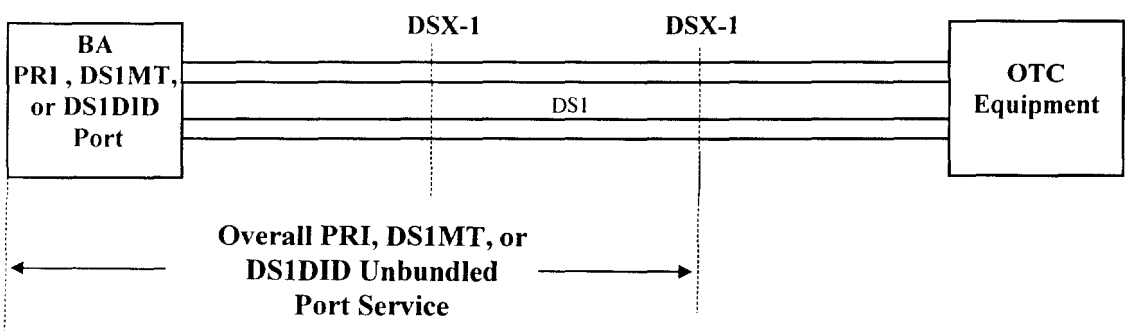

Figure 2-2. Typical PRI, DS1MT, or DS1DID Unbundled Port Configuration

2.21 Circuit Mode 3.1 kHz Audio is assumed for all calls originating from the Public Switched Telephone Network (PSTN). In addition, the analog voice grade signals on each DS0 for such calls are encoded and decoded using the μ255 coding scheme described in ITU-T Recommendation G.711 [4].

F. DS1 Message Trunk (DS1MT)

2.22 DS1MT service consists of a 4-wire DSX-1 port associated with the trunk-side of a local switching system and the 4-wire DSX-1 cross-connect and repeatered tie cable between the OTC DSX-1 termination and the local switching system DSX termination. A typical DS1MT port configuration is illustrated in Figure 2-2.

2.23 DS1MT ports are DSX-1 interfaces that meet the electrical specifications in ANSI T1.102 [3]. DS1MT ports use the B8ZS line code and the ESF framing format described in ANSI T1.403 [5].

2.24 DS1MT ports are synchronized by the BA local switching system that uses a timing supply that is traceable to a stratum one clock as described in ANSI T1.101 [6]. The Building Integrated Timing Supply (BITS) meets the 3E clock specifications in ANSI T1.101 [6].

2.25 DS1MT ports are channelized into 24 DS0 channels.

2.26 For out-of-band common channel signaling (CCS) applications, each DS0 can carry a 56 kbps or 64 kbps information payload. Signaling System 7 (SS7) signaling conforming to Bellcore GR-905-CORE [7] will be used in such applications.

2.27 For non-CCS/SS7 applications, robbed bit supervisory signaling conforming to ANSI T1.403 [5], wink-start call control protocol, and MF signaling will be used. When robbed bit supervisory signaling is used, each DS0 is limited to a 56 kbps payload.

2.28 Analog voice grade signals on each DS0 are encoded and decoded using the μ255 coding scheme described in ITU-T Recommendation G.711 [4].

G. DS1 Direct Inward Dialing (DS1DID)

2.29 DS1DID service consists of a 4-wire DSX-1 port associated with the trunk-side of a local switching system and the 4-wire DSX-1 cross-connect and repeatered tie cable between the OTC DSX-1 termination and the local switching system DSX termination. A typical DS1DID port configuration is illustrated in Figure 2-2.

2.30 DS1DID ports are DSX-1 interfaces that meet the electrical specifications in ANSI T1.102 [3]. DS1DID uses the AMI or B8ZS line code and the SF or ESF framing format described in ANSI T1.403 [5].

2.31 DS1DID ports are synchronized by the BA local switching system using a timing supply that is traceable to a stratum one clock as described in ANSI T1.101 [6]. The Building Integrated Timing Supply (BITS) meets the 3E clock specifications in ANSI T1.101 [6].

2.32 DS1DID ports are channelized into twenty-four 56 kbps DS0 channels. Each DS0 channel uses robbed bit supervisory signaling conforming to the loop reverse battery signaling (customer installation provided loop current feed) specifications in ANSI T1.403, Annex C [5].

2.33 Each DID DS0 channel uses the wink-start call control protocol and either dial pulse (DP), Dual Tone Multi-Frequency (DTMF), or Multi-Frequency (MF) address signaling. DP address signaling is transmitted using the robbed bit supervisory signaling. DTMF and MF address signaling is transmitted along with other voiceband frequencies in the DS0 payload after being encoded using the μ255 coding scheme described in ITU-T Recommendation G.711 [4].

2.34 Analog voice grade signals on each DS0 are encoded and decoded using the μ255 coding scheme described in ITU-T Recommendation G.711 [4].

H. Network Channel and Network Channel Interface Codes

2.35 Network Channel (NC) and Network Channel Interface (NCI) codes are used for communicating channel and interface information. The NC/NCI code set facilitates the identification of network channel requirements and associated interface specifications for services described in tariffs.

2.36 For switched services, the NC code is an encoded representation of the channel that is provided from the OTC Point Of Termination (POT) to the BA CO. By varying the NC code, the customer is allowed to further specify the type of service.

2.37 The most common DUPS NC codes are shown in figure 2-3. The complete set of NC codes for DUPS and other services may be found in SR-STS-000307 [9].

2.38 The NCI code is an encoded representation used to identify five interface elements located at a POT. The five elements reflect the following physical and electrical characteristics: number of physical conductors, protocol, impedance, protocol options, and transmission levels points (if applicable).

2.39 Valid DUPS NCI codes are shown in Figure 2-4.

2.40 Valid Digital NC/NCI code combinations are shown in Figure 2-5. Complete NC/NCI compatibility for DUPS and other services may be found in SR-STS-000323 [10].

Figure 2-3: DUPS NC Codes

Service	NC Code	Character 3	Character 4
BRI & CBRI	SN	A (2-Wire)	L (line side)
Primary Rate ISDN	HC	E (ANSI ESF & B8ZS)	E (PRI 24B)
			I (PRI 23B + D)
DS1 Message Trunk	SD	U	K (EO to EO SS7)
			L (EO to LT SS7)
DS1 DID	SD	-	Y (DID - DTMF)

Figure 2-4: DUPS NCI Codes

NCI Code	Description
02QC5.OOS	Basic Rate ISDN
02QC5.OOS	Centrex Basic Rate ISDN
04QB9.11	Primary Rate ISDN
04QB9.11	DS1 Message Trunk
04QB9.11	DS1 Direct Inward Dialing

Figure 2-5: Valid NC/NCI Code Combinations

Service	NC Code	NCI Code
Basic Rate ISDN	SNAL	02QC5.OOS
Centrex Basic Rate ISDN	SNAL	02QC5.OOS
Primary Rate ISDN (24B)	HCEE	04QB9.11
Primary Rate ISDN (23B+D)	HCEI	04QB9.11
DS1 Message Trunk (EO to EO SS7)	SDUK	04QB9.11
DS1 Message Trunk (EO to Tandem SS7)	SDUL	04QB9.11
DS1 Direct Inward Dialing	SD-Y	04QB9.11

3. Service Elements

A. General

3.01 Three elements are always used with BRI and CBRI Unbundled Port Services. They are: CODF cross-connect wiring and tie cable(s), BA local switching system CO voice frequency (VF) cabling, and a BA local switching system port. Figure 3-1 illustrates the BRI and CBRI Unbundled Port Service elements and identifies the sections of this document that contain the requirements for each of the elements.

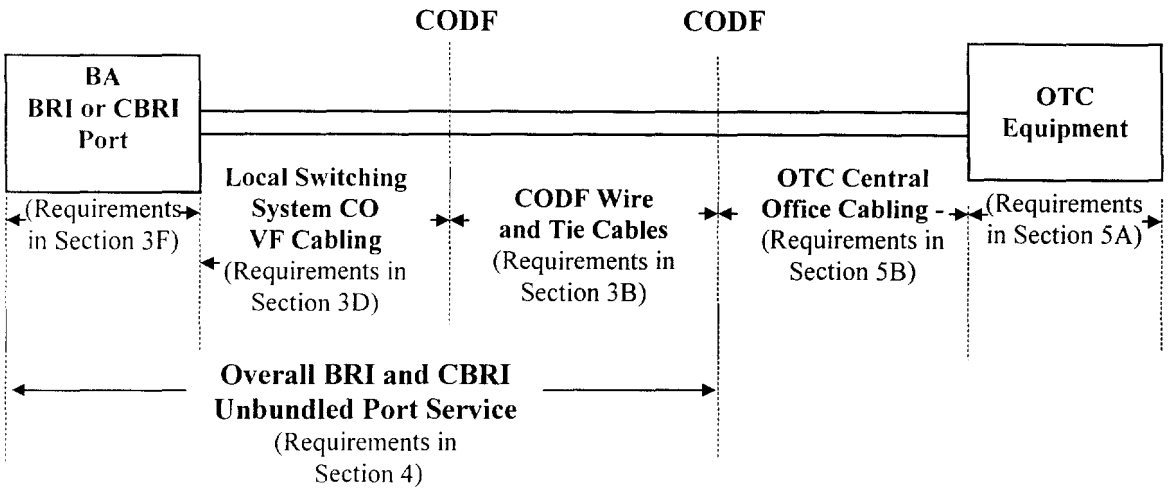

Figure 3-1. BRI and CBRI Unbundled Port Service Elements

3.02 Three elements are always used with the DS1s associated with the PRI, DS1MT, and DS1DID Unbundled Port Services. They are: DSX-1 cross-connect wiring and tie cable(s), BA local switching system CO DSX-1 cabling, and a BA local switching system DS1 port. Figure 3-2 illustrates the PRI, DS1MT, and DS1DID Unbundled Port Service elements and identifies the sections of this document that contain the specifications for each of the elements.

B. CODF Wiring and Tie Cable(s)

3.03 CODF cross-connect wiring and tie cable(s) are used to link the CODF termination of OTC transport equipment to the CODF termination of the BA BRI or CBRI port.

3.04 The total combined length of all CODF cross-connect wiring and all CODF-to-CODF tie cables used for DUPS should be less than 1500 feet.

3.05 The direct-current resistance of the CODF wiring and tie cable used for DUPS should be less than 80 ohms. This is equal to 1500 or less feet of 24 gauge cable.

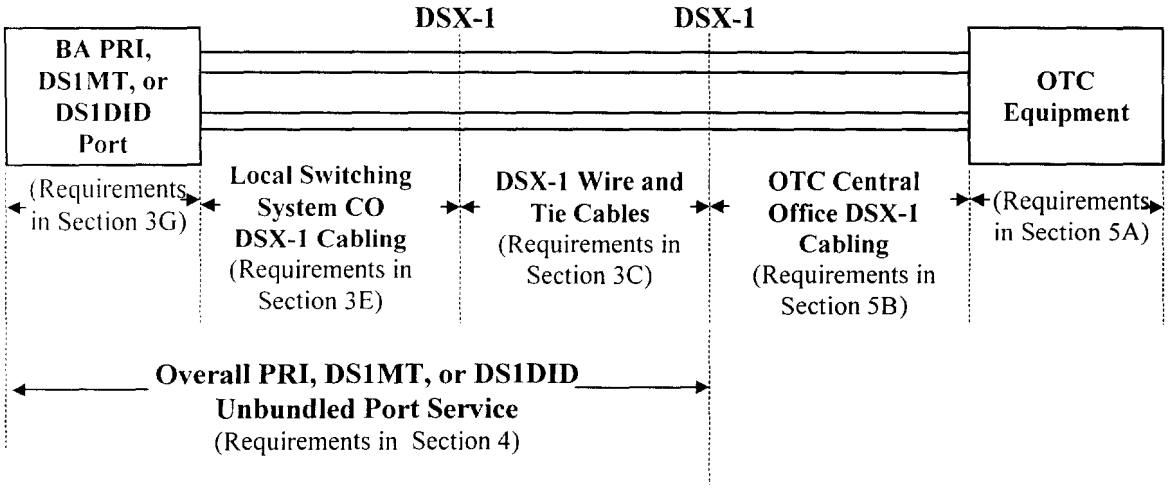

Figure 3-2. PRI, DS1MT, and DS1DID Unbundled Port Service Elements

C. DSX-1 Wiring and Repeatered Tie Cable(s)

3.06 DSX-1 cross-connect wiring and tie cable(s) are used to link the DSX-1 termination of OTC equipment to the DSX-1 termination of the BA PRI, DS1MT, or DS1DID port. In some cases, an electronic digital cross-connect (EDSX) system may be substituted for the DSX-1.

3.07 The total length of all DSX-1 cross-connect wiring should be less than 185 feet.

3.08 When repeatered tie cables are used to link OTC DSX-1 terminations to BA DSX-1 terminations, the cabling between the repeaters and the DSX-1 panels shall be built-out in each direction of transmission such that the overall cabling and build-out is the equivalent of 655 feet of 22 gauge ABAM cable.

D. Bell Atlantic Local Switching System CO Voice Grade Cabling

3.09 The voice-grade CO cabling used to terminate BRI or CBRI local switching system ports on the CODF shall use twisted-pair conductors.

3.10 The type, gauge, and length of the BA CODF cabling shall be specified based on this specification and BA equipment vendor requirements. If the specifications in this document differ from the equipment manufacturers specifications, then the more stringent of the two shall be used.

3.11 The direct-current resistance of the CO cabling between the BA local switching system port and the CODF shall meet the CO cabling requirements in the Bellcore FR-TSY-000064 [11] (i.e., 23 ohms or less). This is equivalent to 275 feet or less of 26 gauge cable, 440 feet or less of 24 gauge cable, and 700 feet or less of 22 gauge cable.

E. Bell Atlantic Local Switching System CO DSX-1 Cabling Requirements

3.12 BA cabling between the Local Switching System and the DSX-1 panels shall be built-out in each direction of transmission such that the overall cabling and build-out is the equivalent of 655 feet of 22 gauge ABAM cable.

F. BRI and CBRI Local Switching System Ports

3.13 The BRI and CBRI line-side ports shall conform to the LT specifications in TR-NWT-000393 [1] and the network specifications in ANSI T1.601-1993 [12].

G. PRI, DS1MT, and DS1DID Local Switching System Ports

3.14 The PRI port shall conform to the DSX-1 specifications in ANSI T1.102 [3], the B8ZS and ESF requirements in ANSI T1.403 [5], the network requirements in ANSI T1.408 [13], the timing requirements in ANSI T1.101 [6], and (for PSTN calls) the μ255 coding scheme in ITU-T Recommendation G.711 [4].

3.15 The DS1MT port shall conform to the DSX-1 specifications in ANSI T1.102 [3], the B8ZS and ESF requirements in ANSI T1.403 [5] and the μ255 coding scheme in ITU-T Recommendation G.711 [4]. In SS7 applications, the DS1MT shall conform to the specifications in GR-905-CORE. In MF applications, the DS1MT shall conform to the robbed-bit signaling specifications in ANSI T1.403 Annex C [5] and the MF signaling requirements in FR-NWT-000064 [11].

3.16 The DS1DID port shall conform to the DSX-1 specifications in ANSI T1.102 [3], the AMI or B8ZS and SF or ESF requirements in ANSI T1.403 [5], the robbed-bit signaling specifications in ANSI T1.403 Annex C [5], the μ255 coding scheme in ITU-T Recommendation G.711 [4], and the DP, DTMF, or MF signaling requirements in FR-NWT-000064 [11].

4. Service Specifications

A. General

4.01 The overall end-to-end DUPS service is from the CODF or DSX-1 termination of the OTC equipment to the BA local switching system port.

4.02 DUPS should meet the limits of this section when measured at the BA local switching system port. Parameters are usually tested in response to trouble reports or when additional testing is purchased.

B. BRI and CBRI

4.03 The overall end-to-end BRI or CBRI service is from the CODF termination of the OTC equipment to the local switching system port (see figure 2-1).

4.04 BRI and CBRI Acceptance Limits (AL) and Immediate Action Limits (IAL) are shown in Table 4-1.

4.05 BRI and CBRI services shall meet the LT specifications in TR-NWT-000393 [1] and the network specifications in ANSI T1.601-1993 [12].

Table 4-1: BRI and CBRI
Acceptance Limits (AL) and Immediate Action Limits (IAL)

Parameter	AL	IAL
40 kHz loss	< 6.0 dB	> 6.0 dB
Resistance	< 130 ohms	> 130 ohms
Leakage	> 5 Megaohms	< 5 Megaohms

C. PRI, DS1MT, and DS1DID

4.06 The overall end-to-end PRI, DS1MT, and DS1DID service is from the DSX-1 termination of the OTC equipment to the digital port on the local switching system.

4.07 PRI service shall meet the B8ZS and ESF specifications in ANSI T1.403 [5], the network specifications in ANSI T1.408 [13], and the 3E timing requirements in ANSI T1.101 [6].

4.08 DS1MT service shall meet the B8ZS and ESF specifications in ANSI T1.403 [5]. If SS7 signaling is used, it shall conform to the specifications in GR-905-CORE [7] and BA 905 [8]. If MF signaling is used, it shall conform to the MF requirements in FR-NWT-000064 [11] and the robbed-bit signaling specifications in ANSI T1.403 Annex C [5].

4.09 DS1DID service shall meet the AMI or B8ZS and SF or ESF specifications in ANSI T1.403 [5]. The robbed-bit signaling specifications in ANSI T1.403 Annex C [5], and the DP, DTMF, or MF signaling requirements in FR-NWT-000064 [11].

4.10 The PRI, DS1MT, and DS1DID services consist of one DS1. The electrical signals of each DS1 at the OTC POT shall meet the DSX-1 specifications in ANSI T1.102 [3].

4.11 Accuracy and availability performance objectives for each PRI, DS1MT, and DS1DID are shown in Figure 4-2. DS1 performance test limits are shown in Figure 4-3.

4.12 Availability is a measure of the relative amount of time that a service is "usable" by the customer. Unavailability begins when the Bit Error Ratio (BER) in each second is worse than 1×10^{-3} for a period of 10 consecutive seconds. The DS1 objective is 99.925 percent availability in any twelve consecutive months. Availability equals the total time minus the outage time divided by the total time.

4.13 Accuracy denotes the error performance and is usually specified in terms of errored seconds (ES), or conversely, error-free seconds (EFS). EFS are the primary measure of error performance for DS1s. An EFS is any second that an error does not occur.

4.14 A Severely Errored Second (SES) is any one second interval that has a BER of less than (worse than) 1×10^{-3}.

4.15 Acceptance and maintenance tests for DS1s should be performed with a Quasi-Random Signal Source (QRSS), on an OTC-POT to local switching system basis, using the Errored Second and Severely Errored Second performance parameters in Figure 4-3.

4.16 Other tests may be performed in response to trouble reports or when additional testing is purchased. The All Ones, 3/24, and 1/8 patterns are acceptable diagnostic stress tests. The pattern sensitivity test criteria associated with these patterns is provided in Figure 4-4.

4.17 If errors are detected using the QRSS or 1/8 patterns, it is recommended that the DS1 line code options (AMI/B8ZS) be verified using the procedures outlined in the Bell Atlantic Network Services Reference Manual Series 72710 & NS6050 and the test criteria in Figure 4-4. These tests make use of the Framed 3/24 and Framed All Zeros patterns.

Figure 4-2: DS1 Performance Objectives

Parameter	Objective
Accuracy	0.25 % errored seconds long-term (30 days or more)
Availability	99.925 % per year

Figure 4-3: DS1 Acceptance and Maintenance Test Limits[2]

Test Duration	Errored Seconds	Severely Errored Seconds
15 min	0	0
30 min	3	0
45 min	5	2
24 hours	150	7

Figure 4-4: Pattern sensitivity test criteria (see notes 1 and 2)

TEST PATTERN (see note 3)	TEST DURATION	ACCEPTANCE LIMIT
All Ones	5 minutes	0
3/24 (AMI only)	5 minutes	0
1/8	5 minutes	0
Framed All Zeros (4) (B8ZS only)	30 seconds	(see note 5)

Notes:

(1) Test patterns should be framed.

(2) One retest is allowed if the initial test fails.

(3) If compatible test equipment is not available to perform these tests, loopback testing should be utilized.

(4) WARNING: If used with the DS1 SF framing format, zeros will occur in time slot 2 of every octet (channel). Terminal equipment will display a false Remote Alarm Indication (a.k.a., yellow alarm). In addition, the use of the framed all-zeros pattern through some types of DS3 equipment may cause DS1 failure if the equipment is not properly optioned for B8ZS.

(5) As an equipment option check, failure will typically be seen as large error counts. Very low counts (e.g., 1 or 2 errors) are not indicative of an optioning problem.

5. OTC Equipment and CO Cabling Requirements

A. OTC Equipment Requirements

5.01 Collocated OTC equipment shall meet all of the applicable generic equipment requirements in Bellcore GR-63-CORE [14] and GR-1089-CORE [15].

[2] While some of the entries in this table are "0", it should be noted that an isolated error event is not necessarily indicative of a service affecting problem.