# ETSI TR 101 982 V1.1.3 (~~2001-12~~2002 02)

*Technical Report*

**DRAFT,** amended for RM approval

# Electromagnetic compatibility and Radio spectrum Matters (ERM); Radio equipment to be used in the 24 GHz band; System Reference Document for automotive collision warning Short Range Radar

Reference
RTR/ERM-RM-008

Keywords
Radar, radio, short range

***ETSI***

650 Route des Lucioles
F-06921 Sophia Antipolis Cedex - FRANCE

Tel.: +33 4 92 94 42 00 Fax: +33 4 93 65 47 16

Siret N° 348 623 562 00017 - NAF 742 C
Association à but non lucratif enregistrée à la
Sous-Préfecture de Grasse (06) N° 7803/88

***Important notice***

Individual copies of the present document can be downloaded from:
http://www.etsi.org

The present document may be made available in more than one electronic version or in print. In any case of existing or perceived difference in contents between such versions, the reference version is the Portable Document Format (PDF). In case of dispute, the reference shall be the printing on ETSI printers of the PDF version kept on a specific network drive within ETSI Secretariat.

Users of the present document should be aware that the document may be subject to revision or change of status. Information on the current status of this and other ETSI documents is available at http://www.etsi.org/tb/status/

If you find errors in the present document, send your comment to:
editor@etsi.fr

***Copyright Notification***

No part may be reproduced except as authorized by written permission.
The copyright and the foregoing restriction extend to reproduction in all media.

© European Telecommunications Standards Institute 2001.
All rights reserved.

# Contents

Intellectual Property Rights ..... 4

Foreword ..... 4

Introduction ..... 4

1 Scope ..... 5

2 References ..... 5

3 Definitions, symbols and abbreviations ..... 6
3.1 Definitions ..... 6
3.2 Symbols ..... 8
3.3 Abbreviations ..... 8

4 Executive summary ..... 9
4.1 Status of the System Reference Document ..... 10
4.2 Technical Issues ..... 10

5 Excerpt of CEPT/ERC Recommendation 70-03 [1], annex 6 ..... 13

6 Main conclusions ..... 13

**Annex A: Detailed market information ..... 15**

A.1 Range of applications ..... 15

A.2 Market size and value ..... 16

A.3 Traffic evaluation ..... 17

**Annex B (informative): Technical information ..... 18**

B.1 Detailed technical description ..... 18

B.2 Technical justifications for spectrum ..... 22
B.2.1 Power ..... 252~~524~~
B.2.2 Frequency (See also spectrum requirements clause 4.2) ..... 252~~524~~
B.2.3 Bandwidth and other radio parameters ..... 292~~928~~

B.3 Information on current version of relevant ETSI standard ..... 313~~130~~

**Annex C (informative): Expected compatibility issues ..... 313~~130~~**

C.1 Coexistence studies (if any) ..... 313~~130~~

C.2 Current ITU allocations ..... 333~~231~~

C.3 Sharing issues ..... 333~~231~~

**Annex D (informative): Item check lists ..... 333~~231~~**

**Annex E (informative): Bibliography ..... 343~~332~~**

History ..... 353~~433~~

# Intellectual Property Rights

IPRs essential or potentially essential to the present document may have been declared to ETSI. The information pertaining to these essential IPRs, if any, is publicly available for **ETSI members and non-members**, and can be found in ETSI SR 000 314: *"Intellectual Property Rights (IPRs); Essential, or potentially Essential, IPRs notified to ETSI in respect of ETSI standards"*, which is available from the ETSI Secretariat. Latest updates are available on the ETSI Web server (http://www.etsi.org/ipr).

Pursuant to the ETSI IPR Policy, no investigation, including IPR searches, has been carried out by ETSI. No guarantee can be given as to the existence of other IPRs not referenced in ETSI SR 000 314 (or the updates on the ETSI Web server) which are, or may be, or may become, essential to the present document.

# Foreword

This Technical Report (TR) has been produced by ETSI Technical Committee Electromagnetic compatibility and Radio spectrum Matters (ERM).

It includes necessary information to support the co-operation under the MoU between ETSI and the European Radiocommunications Committee (ERC) of the European Conference of Post and Telecommunications Administrations (CEPT) for amending annex 5 (RTTE) of the CEPT/ERC Recommendation 70-03 [1].

# Introduction

The industry has responded to European Commission programs and has developed new, efficient 24 GHz Short Range Radar (SRR) solutions for Road Safety and Intelligent Transport Systems. This is in support of such programs as IST, the EU Approach to Road Safety and Intelligent Transport systems (ITS) and RESPONSE, Project TR4022 (see bibliography).

This Systems Reference Document relates to a basic element of the IST program for the automotive sector and can be applied in a variety of applications.

The objective and focus of "The EU Approach to Road Safety and Intelligent Transport systems (ITS)" (see bibliography), "Intelligent Vehicle Systems" are defined as "Improve Safety, Security, Comfort and Efficiency in all Transport modes" and "Focusing on Advanced Pilot/Driver Assistance Systems (in support of vision, alertness, manoeuvring, automated driving compliance with the regulations, etc...)".

Further the new 24 GHz Radar system is an essential "building block" of the EU Project RESPONSE, Project TR4022 (see bibliography) Advanced Driver Assistance Systems: "System Safety and Driver Performance".

# 1 Scope

The present document applies to Short Range Devices (SRD) in the field of SRR operating at very low power levels for exterior automotive applications for vehicle environmental sensing.

These applications require antenna characteristics, which necessitates only narrow elevation antenna beam combined with a limited mounting height.

The present document describes the technical characteristics of SRR's, the Radio frequency requirements as a wideband emission mask, for the carrier frequency operating in the 24 GHz SRD as specified in CEPT/ERC Recommendation 70-03 [1]. The devices also use the SRD Band for a movement sensor function implementing a Doppler mode for a target speed measurement function.

The EN 301 091 [3] presents a basis for the new cost efficient and versatile 24 GHz radar technology, which complements 77 GHz Automotive Cruise Control (ACC) functions.

The following information is given in:

Annex A: Detailed market information;

Annex B: Technical information;

Annex C: Expected compatibility issues.

# 2 References

For the purposes of this Technical Report (TR) the following references apply:

[1] CEPT/ERC Recommendation 70-03 (1998): "Relating to the use of Short Range Devices (SRD)".

[2] ETSI EN 300 440-1: "Electromagnetic compatibility and Radio spectrum Matters (ERM); Short Range Devices (SRD); Technical characteristics and test methods for radio equipment to be used in the 1 GHz to 40 GHz frequency range, Part 1: Transmitter and receiver requirements".

[3] ETSI EN 301 091: "Technical characteristics and test methods for radar equipment operating in the 76 to 77 GHz band".

[4] The "Sensitive" Automobile –Bosch Sensors for Complete Environmental Sensing. Dr. Martin Zechnall, Robert Bosch GmbH. Speech to the 55th International Automotive Press Conference, April 2001 in Boxberg.

[5] Directive 1999/5/EC of the European Parliament and of the Council of 9 March 1999 on radio equipment and telecommunications terminal equipment and the mutual recognition of their conformity.

[6] IST –19910107, PROTECTOR (Preventive safety for unprotected road users). http://dbs.cordis.lu/fep-cgi/srchidadb?ACTION=D&SESSION=18762001-11-28&DOC=2

[7] ITS, Mobile information society, Advanced driver assistance systems ftp://ftp.cordis.lu/pub/telematics/docs/tap_transport/adas.pdf

[8] "Short Range Automotive Radar (SRR)", ERO/ERC workshop 20 March 2001, – RegTP Mainz http://www.ero.dk/eroweb/srd/SRD-UWB.htm

# 3 Definitions, symbols and abbreviations

## 3.1 Definitions

For the purposes of the present document, the following terms and definitions apply:

**Accuracy:** the degree of conformity of a measured or calculated value to its definition or with respect to a standard reference (see uncertainty)

**Ambiguity:** the properties of something that allows it to have more than one possible meaning

**Auto-correlation:** a measure of the similarity between a signal and a time-shifted replica of itself

**Bandwidth:** the range of frequencies, expressed in Hertz (Hz), that can pass over a given transmission channel

NOTE 1: The bandwidth determines the rate at which information can be transmitted.

**Half power Beam width (HPBW):** in an antenna, the angular sector in degrees of the radiated power pattern at the half-power (3dB) point

**Binary Phase Shift Keying:** DSB suppressed carrier discrete phase modulation

**Chip:** the time it takes to transmit a bit or single symbol of a PN code

**PN Code:** a digital bit stream with noise-like characteristics

**Coherent homodyne detection:** synchronous receive process with a local carrier of same frequency and phase

**Correlator:** the SS receiver component that demodulates a Spread Spectrum signal; a device that measures the similarity between an incoming signal and a stored replica.

**Cross-correlation:** a measure of the similarity of two different signals.

**De-spreading:** process used by a correlator to recover narrowband information from a spread spectrum signal

**Diffraction Loss**: the loss between two antennas caused by the scattering of energy from obstruction in the path

**Directive Gain:** in a given direction, 4pi times ratio of the radiation intensity in that direction to the total power radiated by the antenna.

**Relative Gain**: Ratio of the intensity at any direction to the maximum intensity

**Drift (Frequency):** the linear (first-order) component of a systematic change in frequency of an oscillator over time. Drift is due to aging plus changes in the environment and other factors external to the oscillator data symbol.

**Direct Sequence Spread Spectrum:** it can be assumed that the information signal in DSSS transmission is spread at baseband, and the spread signal is then modulated in a second stage

**Dwell time:** the continuous time duration a carrier frequency stays within a given frequency channel

**FCC NPRM:** The regulative authority of the United States (FCC) has started a rule making process regarding ultrawideband transmitters which will result into a standard amendment of 47FDR part 15. One important document during this process is the "notice of proposed rulemaking", released in 5/2000.

**Fractional Bandwidth:** In a design the ratio of neccesary bandwidth divided by the carrier frequency e.g. 3GHz / 24GHz = 12.5%

**Free-Space Path Loss:** in an antenna, the loss between two isotropic radiators in free space resulting from the decrease in power density with the square of the separation distance.

**Frequency allocation:** a band of radio frequencies identified by an upper and lower frequency limit earmarked for use by one or more of the 38 terrestrial and space radio communications services defined by the International Telecommunication Union under specified conditions

**Frequency assignment:** authorization given by a nation's government for a station or an operator in that country to use a specific radio frequency channel under specified conditions

**Frequency Shift Keying:** modulation where the data causes the frequency of the carrier to change from one frequency to another on discrete stages.

**Gain, dBd:** antenna gain, expressed in decibels referenced to a half wave dipole

**Gain, dBi:** antenna gain, expressed in decibels referenced to a theoretical isotropic radiator

**Gain, dBic:** antenna gain, expressed in decibels referenced to a theoretical isotropic radiator that is circularly polarized

*Note: irrelevant, no reference in text* **Industrial Scientific, Medical bands (ISM)**: frequency bands in which non-radio RF emissions can be allocated

NOTE 4: Generally also allowed for secondary radio services i.e SRD's.

**Isotropic Radiator:** a hypothetical, loss less antenna having equal radiation intensity in all directions; used as a zero-dB gain reference in pattern measurements or directivity calculations

**K, Ku, Ka Bands:** the frequency band between 18 - 27 GHz, Ku 12 - 18 GHz, Ka 27-40 GHz

**Microwave:** a signal in the generic frequency range from above 1 GHz to an upper end of perhaps 30 GHz or 40 GHz

NOTE 5: This is the frequency range where coaxial cabled TEM mode signal propagation is viable.

**Narrowband:** a classification for the spectral width of a transmission system

NOTE 6: Generally considered if the fractional BW is below 1% of the carrier frequency.

**Noncoherent detection:** envelope receive process without phase coherency to the reference carrier but any subcarrier

**Occupied BW:** bandwidth of an emission defined for UWB or alike systems as 10 dB bandwidth of the power spectral density (Note: 10dB definition also according FCC NPRM)

Power Spectral Density PSD (dBm/Hz). Some limit specifications prefer a definition of PSD as a power in a certain measurement resolution bandwidth, e.g. –30dBm in 1MHz, which is equivalent –90dBm/Hz

**Pulse Desensitization Correction Factor:** the pulse desensitization correction factor is a technique used to determine the true pulse amplitude based on measurements taken from a spectrum analyser , which has less resolution bandwidth then the signal to be measured. The analysers impulse reponse is unable to transfer the input pulse shape into an similar narrow output shape but distort the shape magnitude (decrease) as well as the pulse duration (increase).
A pulse desensitization correction factor was designed specifically for measuring the peak output level of pulsed radar transmissions. The PDCF is defined as 20log(B_signal/RBW_analyser) with respect to the peak fieldstrength.
(see HP application note 150-1 PDCF w.r.t. amplitude spectrum)

**Pseudo Noise:** a digital signal with noise-like properties. Also a wideband modulation which imparts noise-like characteristics to an RF signal

**Polarization:** in an antenna, the direction in which the electric field vector is aligned during the passage of at least one full cycle

**Pseudo Random Binary Sequence:** a pattern of digital data which has a random information content

NOTE 7: The ITU specifies a variety of sequences with different lengths identified by a PN number.

**Processing Gain**: the ratio of the bandwidth of a spread spectrum signal to the bandwidth of the baseband signal.

**Radiation Pattern:** a graphical representation in either polar or rectangular coordinates of the spatial energy distributions of an antenna

**Reflection:** in an antenna, the redirection of an impinging RF wave from a conducting surface

**Refraction:** the bending of an RF wave while passing through a non-uniform transmission medium

**Resolution:** the degree to which a measurement can be determined is called the resolution of the measurement

NOTE 8: The smallest significant difference that can be measured with a given instrument.

**Return Loss:** expressed in decibels, Return Loss is a measure of VSWR

**Scattering:** the random redirection of RF energy from irregular conducting surfaces

**Separation:** the capability to discriminate two different events (e.g. two frequencies in spectrum or two targets over range)

**Side Lobe:** in an antenna, a radiation lobe in any direction other than that of the major lobe

**Synchronization:** the process of measuring the difference in time of two time scales such as the output signals generated by two clocks

NOTE 9: In the context of timing, synchronization means to bring two clocks or data streams into phase so that their difference is zero.

**Uncertainty:** the limits of the confidence interval of a measured or calculated quantity

NOTE 10: The probability of the confidence for limits should be specified, preferably as two standard deviations.

**Video Bandwidth**: video bandwidth of a spectrum analyser. A VBW less the RBW applied results in an averaging of the measured signal.

**Ultra wideband**: A classification for the spectral width of a transmission system. Considered as a fractional BW >25% or an absolute BW of more than 1.5GHz according FCC NPRM.
*Note: The B-PSK radar system provider ask for a relaxation of such definition to an absolute BW of 500MHz.*

**Wideband:** a classification for the spectral width of a transmission system. Generally considered if the fractional BW is >1% of the carrier frequency.

## 3.2 Symbols

For the purposes of the present document, the following symbols apply:

| | |
|---|---|
| $\lambda$ | Wavelength |
| $\Delta r$ | Range separation |
| E | Electrical field strength |
| Eo | Reference electrical field strength |
| f | Frequency |
| P | Power |
| R | Distance |
| Ro | Reference distance |
| t | Time |

## 3.3 Abbreviations

For the purposes of the present document, the following abbreviations apply:

| | |
|---|---|
| ACC | Automotive Cruise Control |
| $B_{occ}$ | Spectral bandwidth |
| BPSK | Binary Phase Shift Keying |
| CW | Continuous Wave |
| dB | Decibel |
| dBi | Decibel, isotropic |
| dBm | Decibel, milliwatt |
| *Note:No reference in text* | |
| DSSS | Direct Sequence Spread Spectrum |
| eirp | equivalent isotropically radiated power |
| ECC | European Radio communication Committee |
| ERP | Effective Radiated Power with respect to dipole |
| FCC | Federal Communications Commission |

| | |
|---|---|
| FHSS | Frequency Hopping Spread Spectrum |
| FMCW | Frequency Modulated Continuous Wave |
| FSK | Frequency Shift Keying |
| *Note:No reference in text* | |
| IF | Intermediate Frequency |
| ISM | Industrial Scientific, Medical |
| LRR | Long Range Radar |
| Mbps | one million bits per second; a data rate |
| PDCF | Pulse desensitization correction factor |
| PN | Pseudo Noise |
| PPM | Pulse Position Modulation |
| *Note:No reference in text*PRF | Pulse repetition frequency |
| PSD | Power Spectral Density (dBm/Hz) |
| RBW | Resolution Bandwidth of a spectrum analyzer |
| RCS | Radar Cross Section |
| RF | Radio Frequency |
| rms | root-mean-square |
| RPE | Radiation Pattern Envelope |
| RTTT | Road Transport and Traffic Telematics |
| Rx | Receiver |
| *Note:No reference in text* | |
| SRD | Short Range Device |
| SRR | Short Range Radar |
| Tx | Transmitter |
| VBW | Video Bandwidth of a spectrum analyser |
| VSWR | Voltage Standing Wave Ratio |
| WGSE | Working Group Spectrum Engineering |

# 4 Executive summary

Automotive radar function covers Long Range Radar (LRR) and Short Range Radar (SRR).

LRR at 77 GHz is used for distance scanning, which requires an operating range of approx 150 m and is used at vehicle velocities above 30 km/h to 50 km/h. One or multiple narrow lobes control or scan the driving path in front of the car to determine the distance to the vehicle driving ahead for maintaining a constant minimum safety distance. The mean power levels (eirp) are 50 dBm for class 1 and 23,5 dBm for class 2 .see Ref.[3]. Peak levels are 55 dBm.

SRR units operating at 24 GHz require an operating range of 30 metres or below and are used for a number of applications to enhance the active and passive safety for all kind of road users. Applications which enhance passive safety include obstacle avoidance, collision warning, lane departure warning, lane change aid, blind spot detection, parking aid and airbag arming. The mean power limit is 0 dBm EIRP and the peak limit is 20 dBm EIRP. Outside the SRD band the average spectral power density is -30 dBm/1MHz or –90dBm/Hz respectively(see Ref.[3])

SRR Applications which enhance active safety include stop and follow, stop and go, autonomous braking, firing of restraint systems and pedestrian protection. The combination of these functions is referred to in the literature as a "safety belt" for cars. See also Ref.: [6], [7], [8], “Advanced driver assistance systems”, “ IST –19910107, PROTECTOR (Preventive safety for unprotected road users).”

The SRR functions allow a significant increase in safety, the saving of lives and avoiding damage of goods which is in the order of 100's Billion EUR/p.a (see bibliography).

The 24 GHz SRR is a combination of two functions. It allows on the one hand a precise speed measurement with help of a CW Doppler emission. . The spectrum of such narrow band CW emission is completely covered by the existing limits of the 24 GHz SRD band (see Ref. [1]).
This speed measurement mode one the other hand is combinedwith a low power wideband emission to provide precise radial range information of objects with a high range separation in order of approximately 5-10 cm.
The Sensor fusion data processing thus provides Cartesian object positions for a possible crash impact point and the closing angle. With this information the system can alert the driver or the system can do counter measures to prevent collisions or avoid or circumvent obstacles autonomously [8].

24 GHz SRR technology allows a low-cost design and keeps the product size small enough to fit the sensor in the space given behind vehicle bumper fascias. Transmission of µWaves trough painted fascia material is feasible at 24GHz as well, which is very critical for higher frequencies.

Such SRR functionality cannot be covered by other means or systems operating e.g. at carrier frequencies of 77 GHz or 5.8 GHz . This is because of functionality, size manufacturability as well as design and cost constraints. Only cost-efficient systems will be accepted by the market for in widespread use, which in turn is a prerequisite for effective public benefit.

SRR requires an ultrawide bandwidth for the range measurement of approx ± 2,5 GHz according to a defined mean PSD emission mask.. The emissions in the center of the emission mask are at or below the spurious limit of EN 300 440 (-30 dBm in 1 MHz, equivalent –90dBm/Hz) The emissions outside the proposed emission mask are reduced below –50 dBm in 1MHz, equivalent –110dBm/Hz. The emitter mask is valid for all system concepts proposed.
Extensive compatibility studies are needed in order to determine emission levels, antenna characteristics and other mitigation factors avoiding harmful emissions to services operating in the relevant frequency bands.

SR Radar systems can be accommodated under CEPT/ERC Recommendation 70-03 [1], annex5, RTTT,which deals already with automotive functions.

According to the RTTE Directive, article 5, harmonized standards; article 6 and 7, the placing on the market and putting into service assumes availability of harmonized ETSI standards and the availability of the frequencies as published in national Air Interfaces (and OJ). CEPT/ERC requires harmonization of the frequencies for operation in the ERC countries. The amending of the ETSI harmonized standard EN 301 091 [3] is pursued in parallel to this system reference.

## 4.1 Status of the System Reference Document

This system reference TR 101 982 has been agreed by ETSI ERM #14.

Revision 1 draft was approved ~~is anticipated for approval in~~ by TG31 and is amended for approval by RM

ECC / ETSI agreed to conduct compliance studies in SE .

Further comments from administrations, industry and telekom operators are given in Annex C ," Expected Compatibility issues."

~~*Note: further comments given in Annex C*~~

## 4.2 Technical Issues

**Short background information**

The 77 GHz LRR autonomous cruise control systems fall short in providing the required short range functionality and safety function as required by the market and as defined by the EU Commission programs. 24 GHz SRR prototypes designed by a number of manufacturers have demonstrated the cost-effective industry solutions which can move to high volume SRR systems within relatively in short lead times.

**System description**

See annex B1.

**Applications**

See annex A1.

**New technology (if any)**

The operation of SRR devices around 24 GHz yield from technological and economical aspects results that no other frequency range like 5.8 GHz or 77 GHz can provide.

As example, the antenna sizes of a 5.8 GHz SRR with a carrier frequencies below 15GHz is too large for integration into the vehicle's bumper. A bandwidth in the order of 5 GHz (@-20 dB) must be provided to achieve the required high precision as well as range separation, which cannot be achieved in carrierbased discrete frontend designs at frequencies below 15GHz due to unfeasible fractional bandwidth.
Furtheron, for widespread introduction, SRR's based on 77 GHz technology is cost prohibitive and market penetration in medium and low class vehicles cannot be achieved, thus the goals for enhanced safety on the roads as defined by the EC cannot be realized. The manufacturing tolerances are always tighter than for a 24 GHz chips and fully automated 77 GHz assembly is not mature.

The cost outlook takes into account the technology progress in the years ahead. This progress would also effect further cost reduction on 24 GHz systems so that significant differences would be maintained.

Another factor is that a market for high volume chips and other components is already in existence in the telecommunation at K-Band and will see high growth which reduce system cost at a faster rate than at higher frequencies where volume and demand is significantly lower.

Also the allocated 76 GHz to 77 GHz band is insufficient to accommodate the necessary 5 GHz bandwidth needed for high resolution radars. New or additional band allocations around 76 – 77 GHz or sharing at the significant higher power levels seems not feasible.

The mounting of 24 GHz SRR devices behind the metallic coloured vehicle bumper does not pose problems both by size and attenuation of the bumper material. This is highly critical for devices working at 77GHz. The industry does generally not accept special transmission windows in front and rear bumpers for the several SRR's (16). Even more difficult would be the positioning of transmission windows on the side of cars. LRR's could tolerate technical solutions for a single LRR as used in ACC (Automotiv Cruise Control).

Essential is the availability of a narrow frequency range –such as the 24 GHz SRD band- to accommodate the residual carrier for the "carrier based UWB Radar" as well as provide an accomodation for the CW doppler emission. Carrier-free impulse radars below 10 GHz do not allow a Doppler mode. Furthermore such concept is technically not feasible because of the fast switching modes required. Serious problems concerning dispersion (shift of group delay over pulse duration) are resulting in fictive "ghost" targets in signal processing and are contraproductive concerning target separation requirements.

Therefore and based on the already existing 24 GHz SRD band a hybrid operation mode is used providing a carrier based UWB radar system for generating a relatively precise radar signal at defined carrier and modulation frequencies to realise the above described functions.

It is noticeable that the industry has used the basic 24 GHz SRR principle in differenft realizations, all use the emission mask as described in section B.

**Short market information:**

- Car surround sensing functions requires several individual SRR sensing units per vehicle in the front, rear and sideways with a total number of approx.10 units per vehicle but with limited overlapping beam characteristics.
- The market will develop as soon as cost-effective units are available. Prototypes for characterization are available, pilot units are foreseen in late 2002 with possible volume production start early 2003 or2004.
- Planning security is needed in early 2002 to support the large investment for this new technology in order to continue the growth in the automotive sector with leadership technologies and at the same time meeting the EC goals and stated need for the public to cut the number of collisions, incidents and injuries.
- An essential requirement is the availability of the ETSI standard as well as the amendment of the CEPT/ERC Recommendation 70-03 [1], annex 5.

**Market size, forecasts and timing**

See clause A.2, Market size and Volume.

**Spectrum requirement and justifications (further details in section B)**

The 24 GHz band is considered as the best compromise for functionality, performance, spectrum efficiency, cost, manufacturability and integration in vehicle structures.

The carrier of the UWB signal is allocated inside the 24 GHz SRD band within 24,050 GHz to 24,250 GHz. The level of the modulation spectrum which is located outside of the SRD band is low with emissions at or below the spurious levels.

Considering the high propagation loss at 24 GHz, the directed and narrow beam width (for elevation) as well as the very low power of the modulation sidebands, the system is expected to coexist with all primary users in the range of ± 2,5 GHz.

Both frequency ranges, the 5,8 GHz as well as the 77 GHz frequency band are not suited for the required SRR functionality. The 5,8 GHz range require larger antennas for comparable directivity of the radar beam ( e.g. 25 cm instead of 6 cm vertical antenna dimension). This makes integration into bumpers impossible. Other critical factors are that the required fractional bandwidth to support the radar resolution. This is technically not feasible for carrier based systems at low carrier frequencies. (e.g. more then 50 % at 5,8GHz instead of 13% at 24GHz).

The 77 GHz band has been identified for longer range vehicle radar systems. (ACC Automotive Cruise Control) . The bandwidth of 1 GHz is too narrow for SRR,

The range of 77-79 GHz is noted for radio location but also designated to Space research as well as astronomy services.

The 77 GHz range also has the disadvantage of immature technology , higher system cost and cost of ownership since automated production is difficult if not impossible, the integration in bumpers is not feasible without increasing the power significantly. (The absorption by the bumper material will increase about 5dB, raleigh reflection at colour and primer particles increases the transmission loss about further 20dB) (see also clause B.2).

Furthermore it must be mentioned that the frequency range 76 - 77 GHz has been identified for automotive SRR-systems more than 10 years ago, i.e. this band is harmonized on a European level for automotive SRR-applications. Concerning the required bandwitdh for SRR-systems one has to take into account that the frequency range 76 - 81 GHz (5 GHz in total) is allocated to the Radiolocation Service on a primary basis. This band - or part of it - could be the ideal frequency band for a future global mass market for automotive applications.

**Spectrum parameters and radiated power:**

See spectral spectrum emission mask which is provided in clause B.2.2.

**Transmitted bandwidth / Frequency considerations**

The width of the 24 GHz SRD band (200MHz) is too narrow to accommodate the required spectrum for SRR range operation (5GHz).

SRR's higher bandwidth is needed for sufficient object radial range separation. $\Delta r$, which is the capability of a given Radar system to distinguish between two objects with equally ideal reflective behaviour, but which are positioned at a minimum radial distance of $\Delta r$.

The range separation is inverse proportional to the occupied spectral bandwidth Bocc.

$$\Delta r = k*c / B_{occ.}$$

The factor k is related to the system approach, (which can be set to $0,5 < k < 1$) and the needed discrimination criteria within the related signal processing, c is equivalent to the speed of light.

A minimum range separation $\Delta r < 0{,}05$m is needed, if several targets with multireflective properties in a dynamic vehicle environment have to be detected and tracked, and also if cartesian position determination via sensor data fusion (2-D triangulation) needs very precise range information.

This necessitates a minimum Bandwidth $B_{occ}$ in the order of 5 GHz (@ - 20 dB).

**Current regulations**. (CEPT/ERC Recommendation 70-03 [1], annexes 5 and 6).

Technical and regulatory parameters are defined in the CEPT/ERC Recommendation 70-03 [1] in annex 1 (Generic applications), annex 5 (RTTT) and annex 6 (Movement and Alert).

The SRD bandwidth is ***200*** MHz (CEPT/ERC Recommendation 70-03 [1], annex 6) and is too narrow to accommodate the SRR modulation spectrum.

# 5 Excerpt of CEPT/ERC Recommendation 70-03, annex 5

This 24 GHz specification table can be used for CEPT/ERC Recommendation 70-03 [1], annex 5 with an added transmission mask.

**Equipment for Detecting Movement and Equipment for Alert**

| | Frequency Band | Power (table 2) | Antenna (table 3) | Channel spacing (table 4) | Licensing Requirement (table 5) | Approvals (table 6) | Duty cycle (table 7) |
|---|---|---|---|---|---|---|---|
| f | 24.05-24.25 GHz * | 11 (100mW) | 1 or 2 | 13 | 2 | 1, 2 or 4 | - |

Modulation emissions in the range of 21.625 – 26.625 GHz as defined by compatibility studies.

# 6 Main conclusions

**Business importance and social economic impact**

- The 24 GHz Automotive SRR collision avoidance system significantly enhances safety on the roads as it addresses 88 % of traffic causes (See A2). This is in line and supported by the EU safety and driver assistance programs.
- The emission levels for the carrier of the UWB systems need an accommodation in an SRD band because of the higher levels while the broadband radar UWB signals are considered low enough to avoid harmful emissions into the primary services.
- The 24 GHz range was determined and selected after careful investigations of alternative frequencies such as 77, 64 or 5.8 GHz technologies. 5.8 as well as 64 and 77 GHz fall short in essential requirements and suitability for SRRs.

- An automotive Industry group SARA (Short range Automotive Radio frequency Allocation) was recently formed to support the introduction of SRR systems. The timely introduction of the technology is given through the early availability of standards and regulations. This is in fulfilment of the RTTT programs of the EU (see bibliography).

- The Automotive car manufacturer Industry (ACEA), the Component industry (CLEPA) and the national organisations as the VDA are actively supporting the 24 GHz SRRs technology and SARA activity.

  SARA SRR members are:

- DaimlerChrysler, BMW, Ford, Opel/GM, Porsche, Fiat, Seat, Volkswagen, PSA/Peugot Citroen, Renault, Saab, Volvo, Audi, Megamos, Bosch, Siemens VDO, , Valeo, Visteon, Tyco-M/A-COM, Hella, A.D.C., Delphi, TRW, SMS, Innosent and others.

  The industry has made significant investments in the 24 GHz SRR technology and eagerly awaits provision of regulations and availability of radio standards

**Expected timing for products to market**

- The market is requesting cost-effective units right now. Prototypes for characterization are available,
- Pilot units are foreseen in the first half of 2002 with volume production to start either late 2003 or early 2004.
- An essential requirement is the availability of the ETSI standard as well as the amendment of the CEPT/ERC Recommendation 70-03 [1] for annex 5.

**Requested ERC actions**

- Compatibility evaluations and studies for services as defined under clauses C.1 and C.2 of the present document.
- Update of CEPT/ERC Recommendation 70-03 [1], annex 5, specifying an emission mask.

# Annex A:
# Detailed market information

## A.1 Applications

**Short range Radar functions**

Collision warning;

Precrash sensing;

Firing of restraints, Airbags;

Stop, follow and roll;

Recognition of all Traffic members;

Lane departure warning;

Blind spot detection;

Parking aid;

Pedestrian recognition.

Fig. A1 Short Range Radar Functions

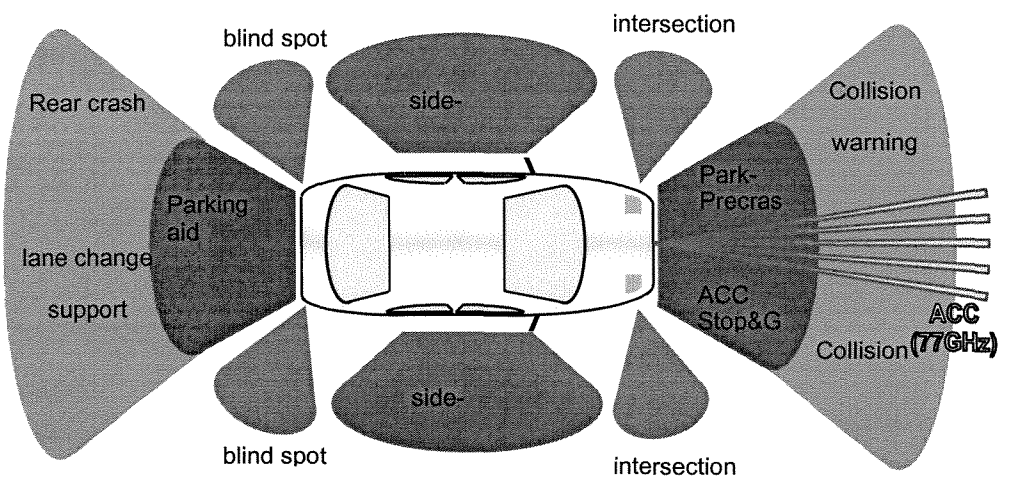

# A.2 Market size and value

The value can be expressed in the commercial business volume and the social economical benefit and savings.

**Business volume (EU)**

| | Year | 2003 | 2004 | 2005 | 2010 | 2015 | 2020 |
|---|---|---|---|---|---|---|---|
| **Car production rate** | MU / Y | 17 | 17,5 | 18 | 18,6 | 19,1 | 19,7 |
| **Cars using SRR** | % | 0,06 | 0,3 | 5 | 12 | 26 | 40 |
| **Cars using SRR** | kU | 10 | 53 | 900 | 2232 | 4966 | 7880 |
| **Average units / Car** | Units | 4 | 6 | 8 | 6 | 5 | 4 |
| **Price / Sensor unit** | EUR | 65 | 60 | 50 | 32 | 20 | 15 |
| **Value / Car incl. others** | EUR | 460 | 510 | 490 | 250 | 130 | 78 |
| **Total Value / Car** | Million EUR | 4,7 | 26,8 | 441,0 | 558,0 | 645,6 | 614,6 |

The long term running rates at Y2020 show a mean vehicle SRR equipment rate of 1.6 SRR's per vehicle. For linear interference scenaria and under the assumption of a vehicle length of 5m as well as a minimum vehicle distance of 5m s.o. can easily calculate a linear density of worst case 0.16 SRR's/m.

**Socio-economic benefit**

Investigations of the automotive industry were made, which identify the following social economical benefit resulting from road accidents or avoidance thereof. (e.g. in Germany 68 Billion DM).

The number of cars in Europe is increasing, which leads to a higher traffic density. The average age of drivers is increasing consistent with demographics of the total European population. Every second accident involving vehicles is related to traffic situations in which a faster reaction of the driver could have avoided crashes. Consequently, there is an increased need and appreciation for obstacle detection systems that operate at day and night (see figure A2).

SRR is an enabling technology for enhanced active safety systems and in particular the mitigation of front-end crashes thus reducing damages and saving of lives.

**Fig.A2, Causes of Rear- Front Crashes**

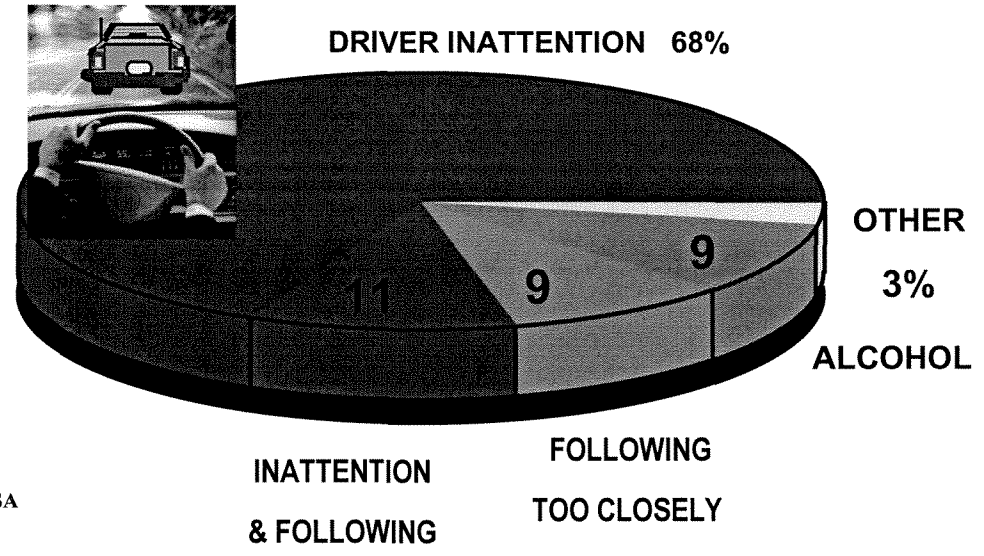


Source: NHTSA

Annual damage cost caused by accidents in the EU is approx. Billion EUR 100 which can be potentially avoided or minimized according to analysis given in "Volkswirtschaftliche Kosten der Personenschäden im Strassenverkehr" (see bibliography).

The amount of damage related to persons injured or death toll is counted for 56 % while the rest of 44 % is related to goods damage.

Secondly in connection with Adaptive Cruise Control (ACC), SRR can reduce traffic congestion.

The precrash application could well be an EC-wide mandate, thus every car produced in the EU would have several radar sensors.

Leading European car manufacturers have chosen improved safety systems as a competitive aspect for the marketing of their cars. The program supports the EU leadership in the automotive industry which has the highest growth rates in the next decades to come.

## A.3 Traffic evaluation

The traffic evaluation can be estimated by the number of systems, the average and /or instantaneous emitted power, based on antenna beam width, the installation height and the occupied bandwidth of the modulation.

The power limit for the in band transmission according to the annex6 of the CEPT/ERC Recommendation 70-03 [1] is 100 mW peak while the wide band modulation level outside the SRD band, which is below the spurious limit, is not anticipated to cause harmful interference (subject to sharing studies).

Due to the low antenna installation height, the low power density, and the narrow vertical beam width, the potential interference (e.g. with airborne or satellite systems) is anticipated to be very low.

The complete coverage of the surround sensing of the car requires between four and ten SRR devices.

# Annex B (informative): Technical information

## B.1 Detailed technical description

Carrier modulated UWB Radar needs a narrow band allocation for the residual carrier below -10dBm. Due to aging and temperature drift the slot should be in the order of 100MHz, which is fullfilled by the given 24GHz SRD band.The narrow band CW mode, required for Doppler speed measurements, is completely covered by the SRD band as well , with a minimum required power of 10dBm EIRPThe UWB modulation mode requires a width of 5 GHz to meet separation requirementsThe discrete residual carrier spike in pulsed mode is due to a finite AM index (finite switch isolation ) It is calculated as $P_{peak\ dB}$ – $isolation_{dB}$ = 20dBm – 30dB = -10dBm residual carrier

- The carrier allocation has to be within an international ISM band due to unlicensed operation and large volume

There are several wideband modulation technologies as known from spread spectrum technologies, which can be used for short-range radar systems.

**Overview of SS Systems for Automotive Radar**

A spread spectrum (SS) signal being "spread" over a large bandwidth can coexist with narrowband signals only adding a slight increase in the noise floor that the narrowband receivers see. As for the spread spectrum receiver, it does not see the narrowband signals since it is listening to a much wider bandwidth at a prescribed code sequence.
There are three basic types of spread spectrum techniques usable for automotive low cost carrier based radar devices, which also might be combined in hybrid concepts:

PN-PSK (Pseudonoise coded phase shift keying)

The carrier phase of the continuously transmitted sinusoidal signal is changed according to a pseudorandom code sequence. The pseudorandom code sequence has a fixed length, which is repeated after a given number of bits. The inverse of the duration of a single bit of the code sequence is called the chip rate, measured in chips per second (cps). The occupied Bandwidth depends upon the chip rate. At the receiver, the information is recovered by multiplying the signal with a locally generated replica of the code sequence. Due to a finite phase shift precision a certain degree of a residual carrier remains, even when a balanced code is applied.
A smoothed spectral density is achieved by the spread of the base signal due to the PN code presenting a noise-like signal.

PN-FH (Pseudonoise Frequency Hopping)

In frequency hopping systems, the carrier frequency of the transmitted sinusoidal signal hops over a defined frequency range according o a pseudo random code sequence. The frequency hopping sequences are dictated by the code sequence. The receiver tracks these changes and produces a constant IF signal. The occupied Bandwidth is equal to the total frequency shift utilized by the steps.
A smoothed spectral density instead of a discrete comb line spectrum is achieved by applying further pulse modulation during each dwell time in a given channel.

3) PN-PPM (Pseudonoise Pulse position Modulation )

- The pulse repetition period of a pulsed RF carrier is varied in a pseudorandom manner by a coded sequence. The occupied bandwidth is related to the pulse duration. Due to a finite amplitude modulation, a residual carrier leakage is transmitted between the pulses. The „Time of flight“ measurement is based on an „equivalent time sampling“ principle, which correlates
  an internal delayed pulse series with the received pulse series delayed by propagation.

- High receiver processing gain can be achieved due to pulse correlation and integration), which allows ultralow emission power

- A smoothed spectral power distribution is achieved due to pseudorandomized pulse repetition via modulation of the pulse repetition frequency or FM of the carrier.

A further spreading of a pulse modulated signal can be achieved by additional FM of the carrier during the pulse emission (e.g. a pulse compression with a linear FM Chirp). The same effect can be obtained by discrete phase shifts during the pulse emission according a barker code.

All these SS types - including further concepts optimized for communication channels- have the following advantages and disadvantages in common:

**Advantages:**

Resists intentional and non-intentional interference of narrowband and to a degree wideband emissions.

Reduces or eliminates multipath effects

Improve spectrum efficiency by permitting sharing of the same bands

Individual sensor privacy due to the pseudo random code sequence (code division multiplexing (CDMA))

**Disadvantages:**

Larger bandwidth (BW) but at lower power densities.

More complex implementation

The larger or relative bandwidth inefficiency does not really apply for the automotive usage of SS radar systems. This stems from the fact that for range accuracy and target separation capability only the absolute bandwidth (or its reciprocal, the pulse duration) is relevant and not the information rate of the binary message (or the PN code, respectively). Indeed the information transmitted contains only the transmitter-specific pseudo-noise sequence and no varying data messages.

Independent from the modulation scheme, the emission mask of all SS systems shall be in conformance to the common transmitter emission mask as defined later.

The basic transmitter block diagrams and spectral emissions of the different automotive SRR systems are shown in figures B.1 to B.4.

## Fig. B1 Typical PN-PPM Block Diagram

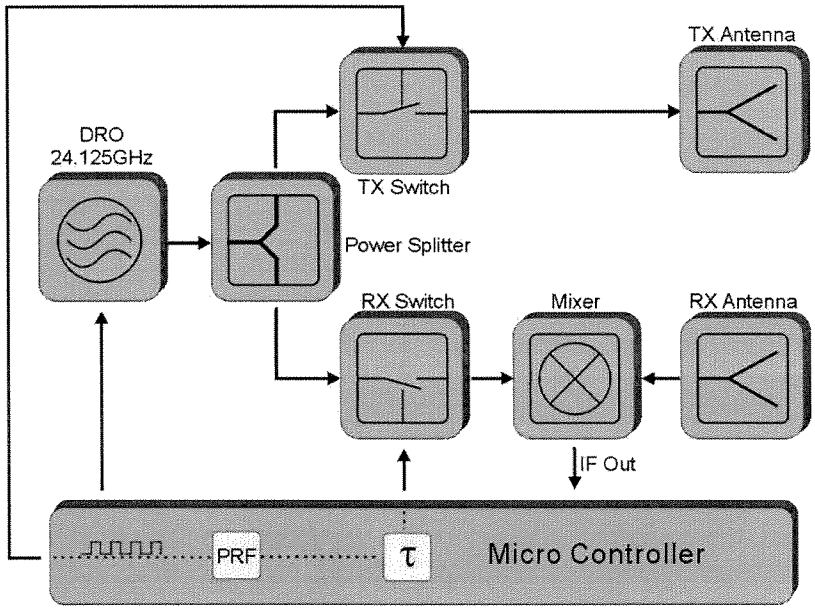


## Fig B2, Measured PN-PSK Spectrum @ 100kHz RBW

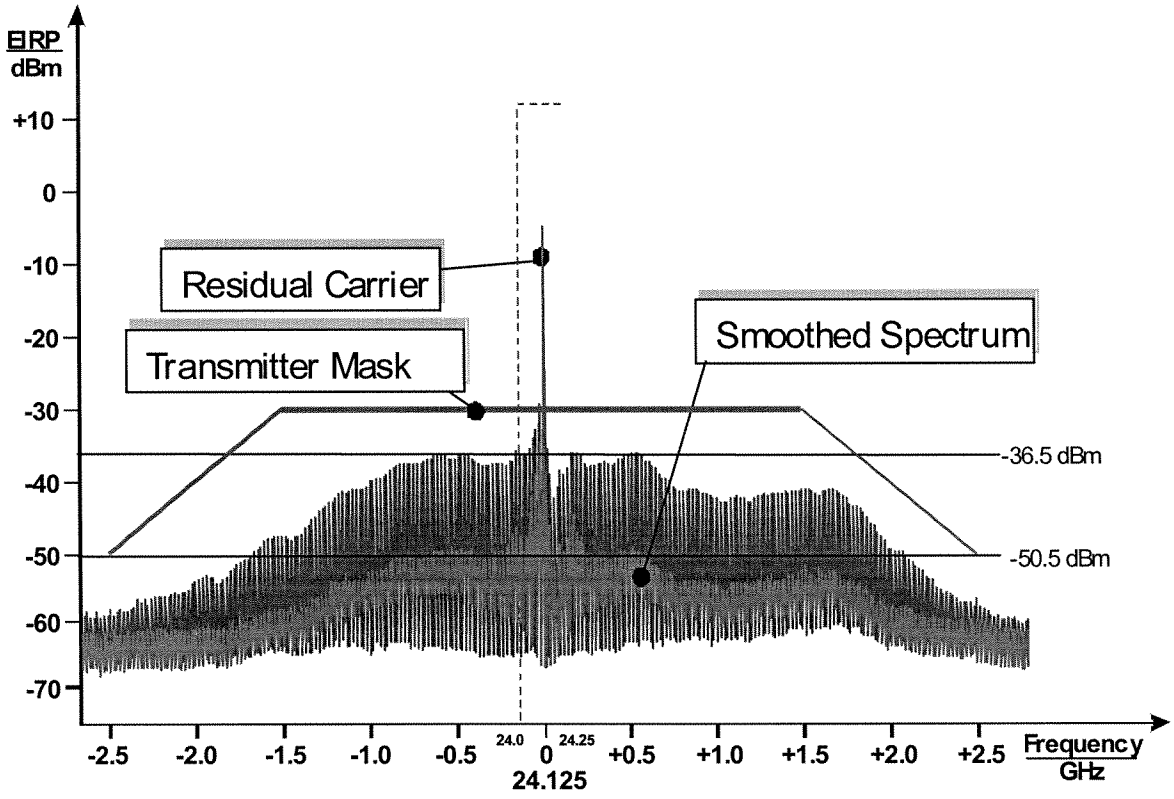


**The RBW of 100kHz for this plot was choosen to clearly show the evenly distributed spectral power density in case of pulse position modulation (Dithering). The PSD (red plot) is measured to –50.5dBm in 100kHz = -100 dBm/Hz or**
**–40.5dBm in 1MHz reference bandwidth.**

**In case of a fixed PRF (no Dithering) a comb spectrum is measured with discrete lines in a spectral distance equal the PRF=2.5MHz (blue plot).**

**The spectral power density of – 100.5 dBm/Hz can be calculated as –36.5dBm – 10log(PRF) = -100.5dBm/Hz = -40.5dBm in 1MHz. The measurement corresponds to the minimum powered concept as shown in the table below.**

| **Puls Design** | **Minimum Concept** | **Maximum Concept** | **Remarks** |
|---|---|---|---|
| **Peak Power $P_{peak}$** | **20dBm** | **20dBm** | **EIRP over entire BW** |
| **Puls duration Δt** | **500ps** | **1500ps** | **Measured at 50% marks** |
| **Puls Repetition PRF** | **2.5MHz**<br>**64dB_Hz** | **2.5MHz**<br>**64dB_Hz** | |
| **Duty Cycle DC** | **0.00125**<br>**29dB** | **0.00375**<br>**24.25dB** | **DC is equivalent to peak to mean power ratio over entire bandwidth** |
| **Mean Power $P_{mean}$** | **-9dBm** | **-4.25dBm** | **EIRP over entire BW** |
| **Single Line Power $P_{line}$** | **-38dBm** | **-28.5dBm** | **single line of a comb spectrum , ifno PPM dithering applied** |
| **PSD** | **-102dBm/Hz**<br>**–42dBm in 1MHz** | **-92.5dBm/Hz**<br>**–32.5dBm in 1 MHz** | **PSD = $P_{line}$ – $PRF_{dB}$ uniform distribution due to PPM** |
| **$BW_{-3dB}$**<br>**$BW_{-10dB}$** | **1.2GHz**<br>**2.3GHz** | **0.8GHz**<br>**1.5GHz** | **Best case assumption of gaussian pulse shape** |

| | | | |
|---|---|---|---|
| **$BW_{-20dB}$** | **3.2GHz** | **2.1GHz** | |
| **$PDCF_{in\ 50MHz}$** | **33.3dB** | **29.5dB** | **20log($BW_{-10dB}$ / 50MHz)** |
| **Peak Power $_{in\ 50MHz}$** | **-13.3dBm** | **-9.5dB** | **$P_{peak}$ – PDCF** |
| **Mean Power $_{in\ 50MHz}$** | **-25dBm** | **-28.5dBm** | **PSD + 10log(50MHz)** |
| **Peak to mean power ratio in 50MHz** | **11.7dB** | **19dB** | |
| **PN-PPM code repetition** | **10kHz** | **10kHz** | |

**It is remarkable that white noise with an uniform distribution over spectrum over a limited bandwidth in a narrow IF stage (e.g. 50MHz) keeps an amplitude propability distribution function which is from gaussian type. With respect to the 5 σ-limits, one may calculate a peak to mean ratio of 20log(5) = 14dB.**
**Literature ( e.g. A. Ludloff: Praxiswissen der Radarsignalverarbeitung, Wiesbaden 1998, Section 3-4) mentions a peak factor of 15dB for practical noise measurements. E.g. FCC NPRM and 47 CDR part 15 utilise 20dB.**
**It is obvious that the peak to mean power ratio in 50MHz of the pulse concept defined above stays below the ratio of white noise.**

## Fig. B3, Typical PN-FH Block Diagram

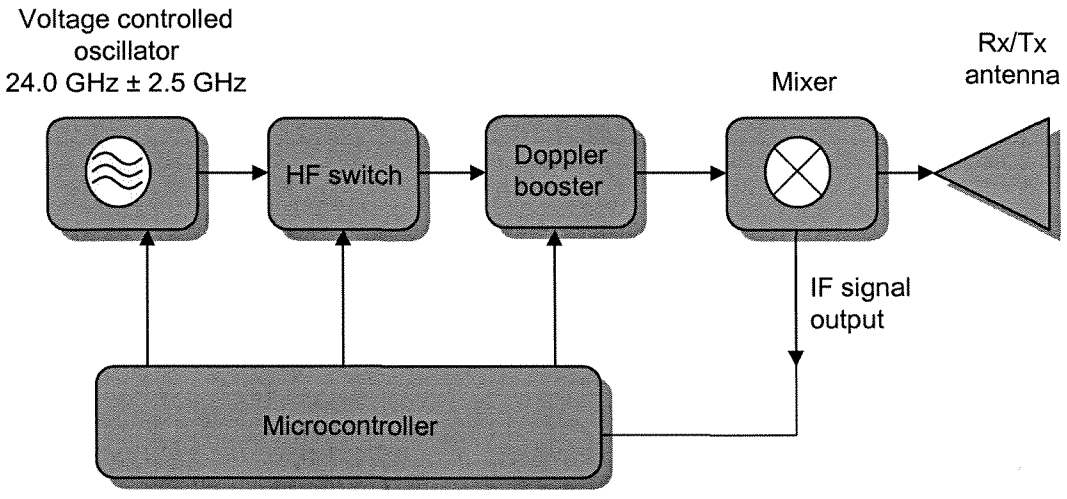


Microcontroller controls VCO span, HF pulse, duty cycle and Doppler Booster amplification

**Fig. B4, Measured broadband Spectrum of a typical PN-FH signal (N.B: no absolute EIRP values)**

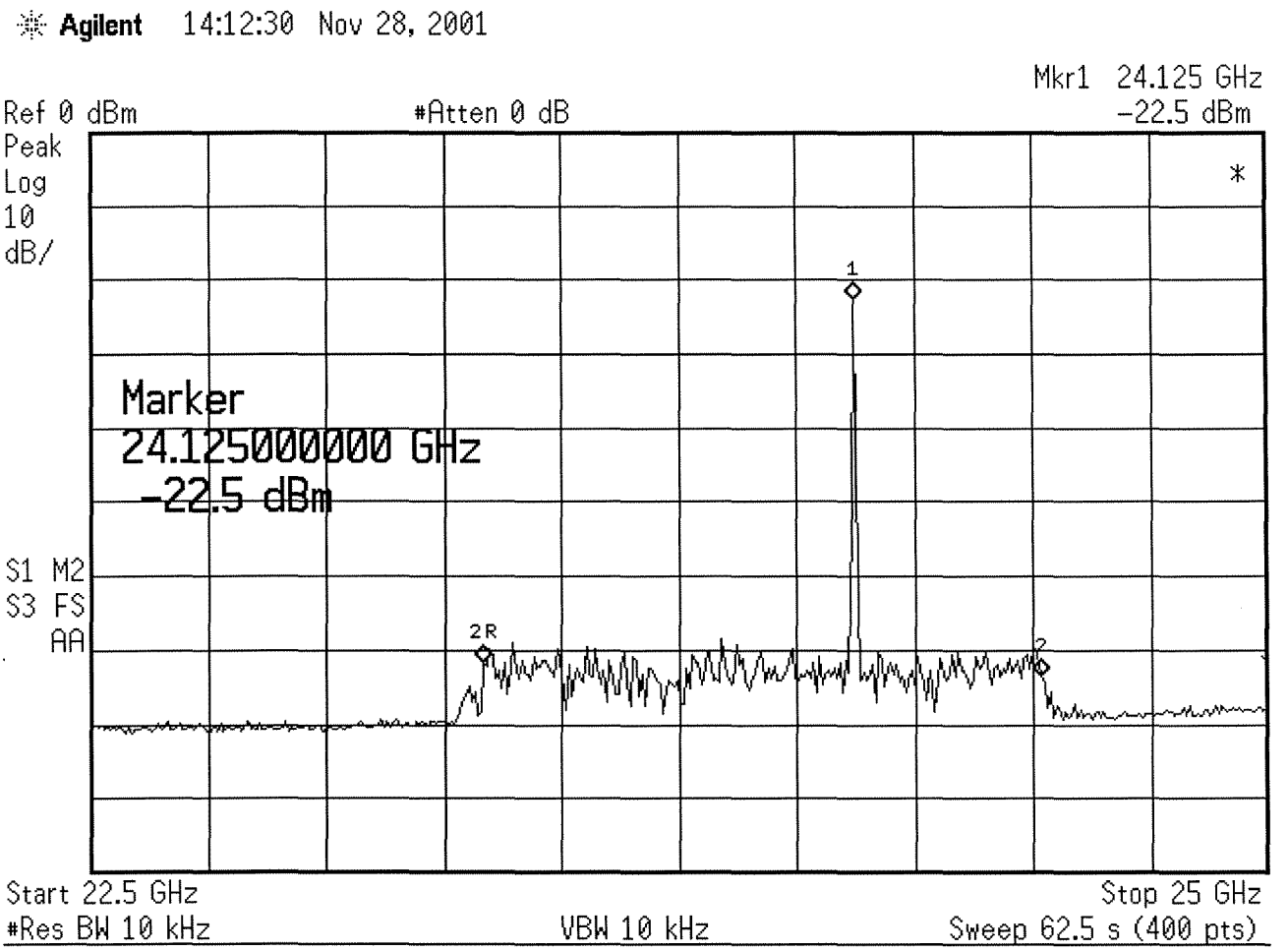


| PN FH Design | Typical large pulse spread operation mode | Typical compact pulse spread operation mode | Remarks |
|---|---|---|---|
| Peak Power $P_{peak}$ | 20dBm | 0dBm | EIRP over entire BW |
| Puls duration $\Delta t$ | 5 ns | 100 ns | Measured at 50% marks |
| Puls Repetition PRF | 1 MHz | 1 MHz | |
| Pulse related Duty Cycle $DC_{pulse}$ | 0.005<br>23 dB | 0.1<br>10 dB | $DC_{pulse}$ is the duty cycle issued by the pulsed on_off gating and is equivalent to peak to mean power ratio over entire bandwidth |
| $BW_{pulse\text{-}spread}$ | 400 MHz | 20 MHz | Spreading of carrier due to pulse width; defined by first zero crossing of sinc envelope |

| | | | |
|---|---|---|---|
| $BW_{carrier_hop}$ | 1 GHz | 1 GHz | $BW_{carrier_hop}$ is the total hopping frequency range for the carrier |
| $BW_{occ}$ | 1.4 GHz<br>91.5 dB_Hz | 1,02 GHz<br>90.1 dB_Hz | overall occupied bandwidth for both frequency hopping and pulse spreading effects |
| Frequency hopping related Duty Cycle $DC_{hop}$ | 0.321<br>4.9 dB | 0.0686<br>11.6 dB | $DC_{hop}$ is the ratio of $(BW_{pulse_spread} + BW_{victim}) / BW_{occ}$ |
| Mean Power $P_{mean}$ | - 3 ~~7.9~~ dBm | - 10 ~~21.6~~ dBm | EIRP over entire BW |
| PSD | -94.5 ~~99.4~~ dBm/Hz<br>– 34.5 ~~39.4~~ dBm in 1MHz | - 100.1 ~~111.7~~dBm/Hz<br>– 40.1 ~~51.7~~dBm in 1 MHz | $PSD = P_{mean} - BW_{occ_in_dB}$ |
| $PDCF_{in\ 50MHz}$ | 18.1dB | 0dB | $20\log(BW_{pulse_spread} / 50MHz)$ |
| Peak Power $_{in\ 50MHz}$ | 1.9dBm | 0dBm | $P_{peak} – PDCF$ |
| Mean Power $_{in\ 50MHz}$ | - 17.5 ~~22.4~~dBm | - 23.1 ~~34.7~~dBm | PSD + 10log(50MHz) |

**Fig. B5, Measured Doppler Spectrum of a typical PN-FH signal at 24.125 GHz (N.B. Doppler booster on, EIRP mean power ca. 17 dBm)**

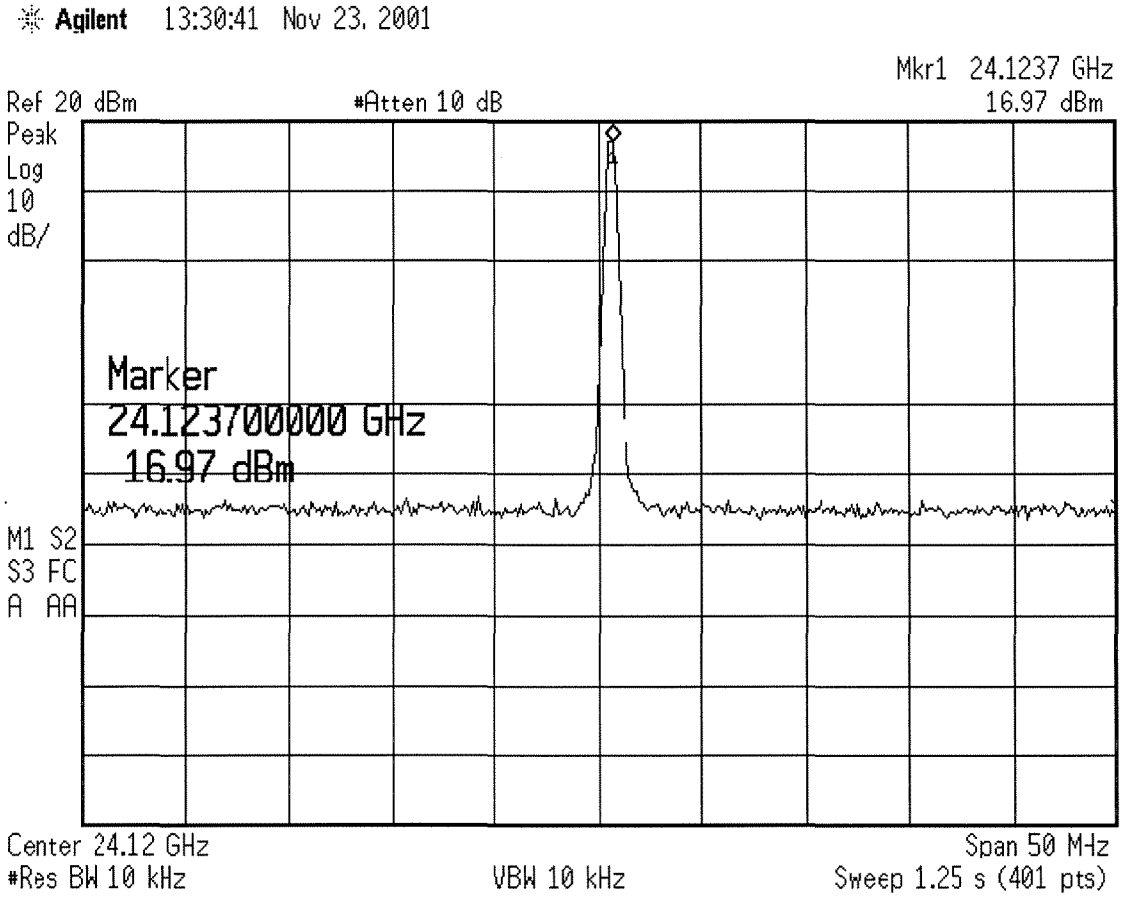

**Remarks: For motion detection by Doppler operation the PN-FH radar systems operates within the SRD band pursuant to the limits in ECC REC 70-03, Annex 1 or 6.**

## Fig. B6. Typical PN-PSK Block Diagram

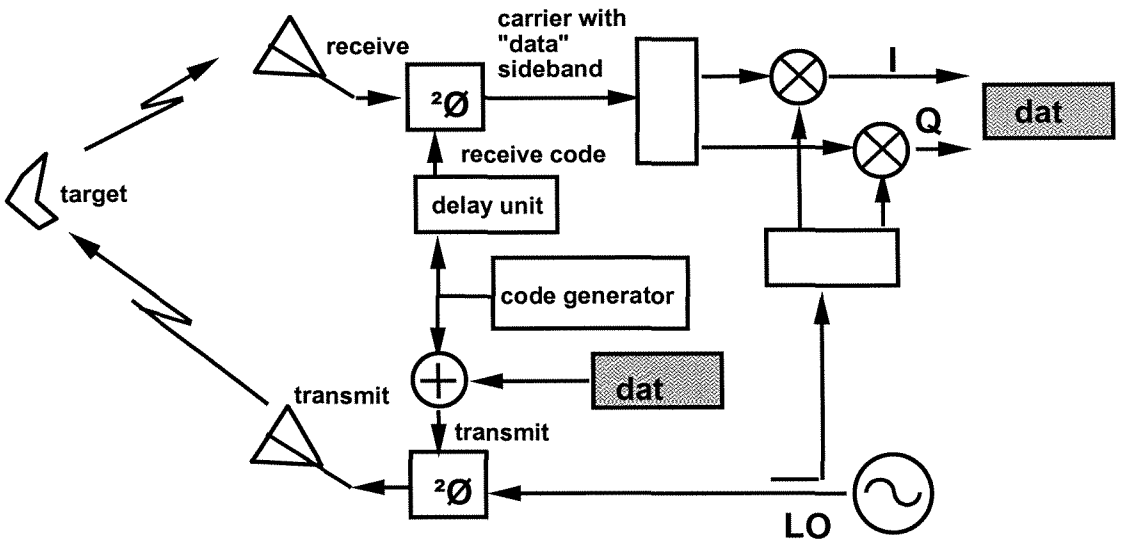


## Fig. B7, Measured PN-PSK Spectrum @ 1MHz RBW

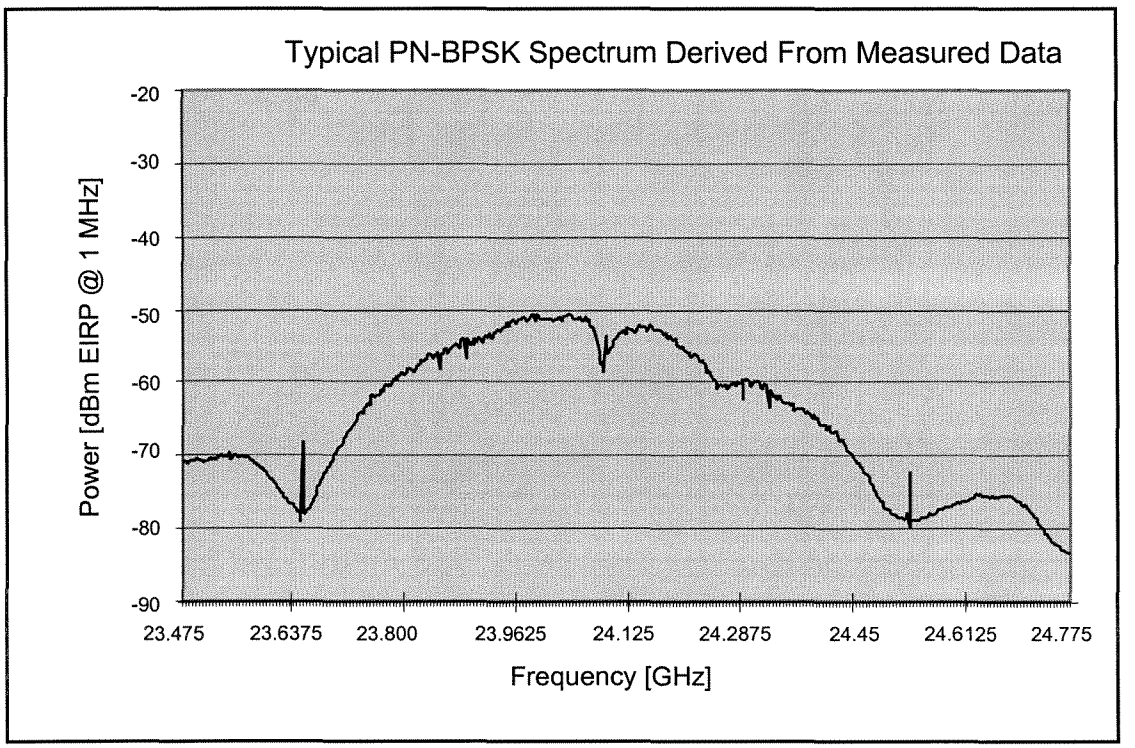

# B.2 Technical justifications for spectrum

## B.2.1 Power

The SRR devices can operate in both very low power wideband and medium power narrow band modes depending on the requirements of the prevailing application, e.g. safety critical, speed-oriented information or high precision position determination or a combination of both. The high power mode is completely accommodated in the 24.05 to 24.25 GHz SRD band pursuant the maximum allowed emission limits according to ERC/REC 70-03, Annex 6. For the low power mode the limits proposed in the SRR emission mask (see standard draft EN 301091) apply.
The change between the two modes can be realized with a fixed and/or a variable repetition rate including variable blanking periods with no intentional emission at all. A simultaneous operation of both modes (hybrid operation) is possible as long as the limits of the proposed SRR emission mask are respected.

The peak power level at the nominal carrier frequency of 24,15 GHz is 20 dBm or 100 mW,and is needed to provide the Doppler operation of the SRR.

The average power is in the range of -15 up to 0 dBm and depends on the range required by the application.

## B.2.2 Frequency (See also spectrum requirements clause 4.2)

**General**

Several items have to be taken into account to determine the appropriate frequency for SRR's:

- The ***unit size***, which is a consequence of the antenna size resulting from antenna gain and the carrier frequency. The automotive market accepts an area coverage of about 50 cm².
- The ***unit cost.*** Automotive products may not exceed a certain cost level to be accepted also for mid size and compact cars. The availability of discrete parts (e.g. transistors with sufficient gain) limits the maximum carrier frequency choice up to 30GHz.
- ***Required Bandwidth.*** Radar range separation is proportional to the occupied bandwidth. Short range applications detecting objects of complex shape need a considerable high separation of a few centimeters.
- ***Application capability.*** Automotive electronics needs to find mounting space at the car under conditions which allow for full functionality. Coloured standard bumper material has to be accepted . Such radome suffers from absorption loss, which is proportional to the frequency. The reflection loss coming from the metallic particles in the colour is proportional to the 4$^{th}$ power of the frequency.
  Comparing 77GHz versus 24GHz shows an entire transmission loss ratio of more then 20dB.
- ***Capability for mass production.*** This implies the reliable availability of components and a stable and reproducible production processes.
- ***Available frequency band.*** Global marketing and use or deployment possibility is a very important issue as well as the compatibility to established services.

The centre frequency is 24,125 GHz with a typical tuning tolerance of ± 0,05 GHz as determined by cost effective frequency stabilization of the oscillator.

### B.2.2.1 Unit Size

The antenna size sets a lower limit to the unit size. The automotive short range radars have a horizontal opening of about 70° HPBW and a vertical opening of about 20° HPBW. The horizontal opening cannot be chosen much larger but

already corresponds to the emission pattern of a single patch wich is comparable to a dipole. The vertical directivity is not tilt too much towards the ground because the system performance would suffer from ground clutter The same holds for the direction towards the sky which is also avoided to prevent from harmful interference to SRR's with services operating above the ground like Fixed Services, Earth Exploration Satellite Systems and Radio Astronomy.

Antenna gains of about 15 dBi are typical for automotive short range radars.

Figure X shows how the unit size dependance from the operating frequency. It can be seen that frequencies below about 15 GHz result in unacceptable unit sizes. The dominating factor is the size of the antenna arrays (Patches).

## Fig.: B8, Unit size versus Frequency

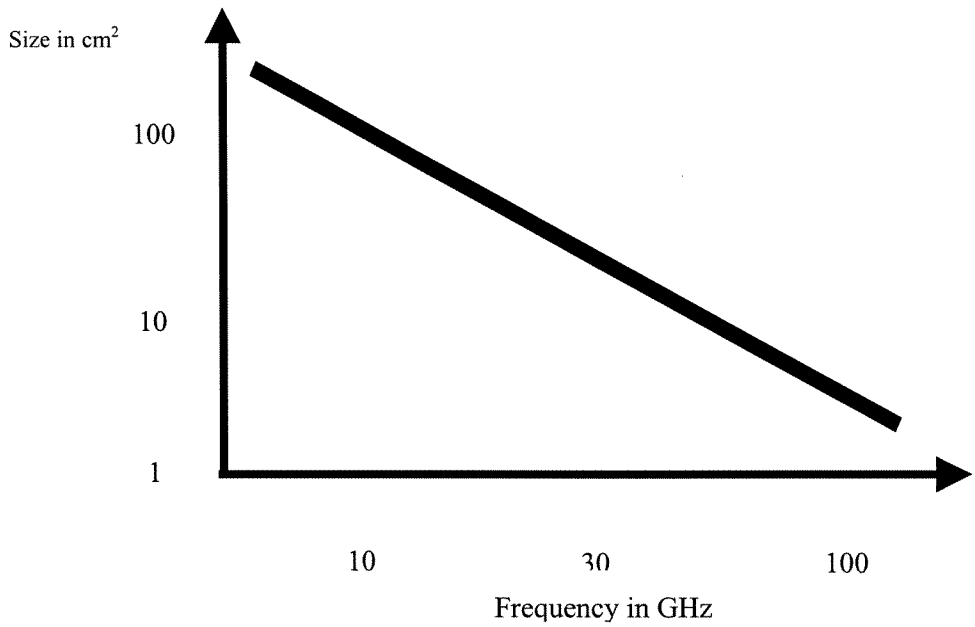


### B.2.2.2 Unit Cost factors and cost estimation overview

Advanced car safety systems will need about 10 sensors placed around the car to gain a panoramic view. So these systems are very sensitive to radar sensor cost. The main contribution to the sensor module cost are the material cost and the manufacturing cost.

Components for use up to about 25 GHz are readily available from an established market at fair prices. The component market for applications at significant higher frequencies like e. g. in the automotive band at 76 … 77 GHz is currently not mature and not able to supply automotive volume needs at attractive prices.

Radars at about 24 GHz can be manufactured with advanced Printed Circuit Boards on full-automated pick and place assembly lines with soldering technologies mainly established in the automotive industry. Products in the 76 … 77 GHz band need sophisticated manufacturing technologies like high precision flip-chip bonding. Those cause high investment cost and have high cycle time accompanied with low yield.

A very rough estimation sees a single beam 24 GHz radar at about 40 € (OEM price) compared to a single beam 77 GHz radar at about 200 €.

For a multi-sensor system with 10 sensors this would result in 400 € (24 GHz) and 2000 € (77 GHz) of sensor cost, respectively. So currently a 77 GHz based system is not accepted by the market because of its higher price. Of course we will have a price degradation for 77 GHz components in the future, but acceptable levels for short range applications currently cannot be foreseen. On the other hand the price level of 24 GHz based products is currently accepted for high end platforms. As also 24 GHz technology will see a price degradation, applications in medium sized and compact cars are already visible.

### B 2.2.2.3 Required Bandwidth / Range Separation

The automotive short range radar systems need to determine not only radial range but also lateral positions. This is e. g. needed to decide in-path and out-of-path objects with respect to the driver lane and to predict the direction of impact for precrash systems. The radar system calculates lateral position from triangulation with the radial range information from at least two sensors. The accuracy $\Delta r$ of the distance reading which is necessary to achieve a lateral accuracy $\Delta y$ is given by

$$\Delta r = \Delta y * b / 2r$$

where b is the distance between the two sensors and r the radial range of the object referred to the baseline between the sensors.

Typical values are $\Delta y = 20$ cm, $b = 1.5$ m and $r = 10$ m. This results in an accuracy requirement of 1.5 cm. Assuming as a rule of thumb that accuracy can be chosen by a factor of three better than the separation we get an requirement of about 5 cm for the separation.

Independent of the accuracy requirement the radar systems need to resolve complex objects with several reflection spots like cars and motorbikes. Here we also find an separation requirement of about 5 cm.

Radar range separation is a function of the modulation bandwidths as shown in figure B9. The resolution requirements of about 5 cm lead to modulation bandwidths of about 3 GHz

**Fig. B9, Distance resolution of a radar versus required modulation bandwidth**

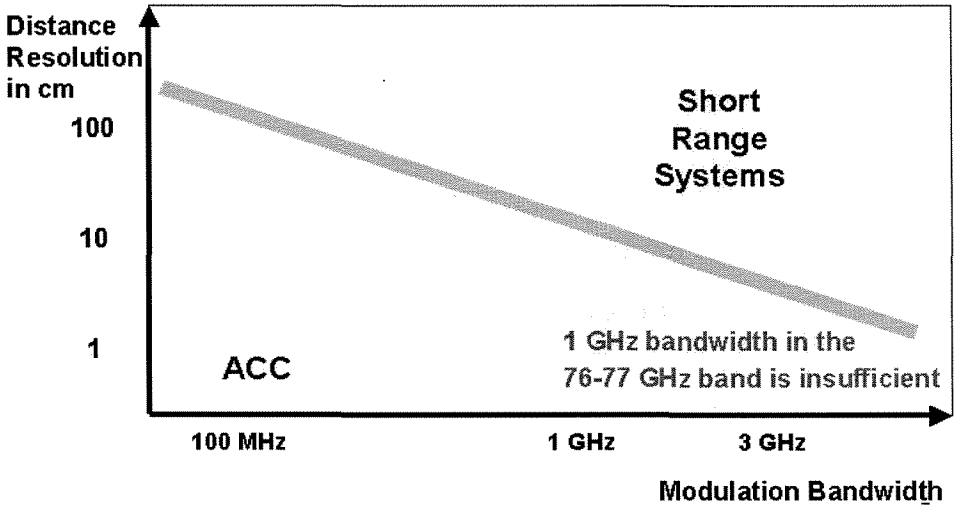


### B 2.2.2.4 Application Capability

The radar sensors have to be placed at the surface of the cars behind a coverage to keep the aerodynamic resistance value and the styling unchanged. The coverage needs to be sufficiently transparent for the chosen frequency. The plastic materials used at the surface of cars like EPDM, ASA, ABS and PC usually have sufficient transparency. Restrictions are caused by metallic particles in some paints (Raleigh scattering), the thickness of paints (parasitic $\lambda/4$ layers) and conductive primers (absorption and reflection) used to enable solvent-free painting processes. Simulation and experiments tell that devices at 24 GHz can live with these application requirements while 77 GHz devices suffer from significant attenuation in excess of 20 dB. In the latter case functionality is no longer achievable. So 77 GHz technology is not generally suitable for mounting behind automotive covers. It furthermore can not be expected, that the

car manufacturers could accept any bumper fascia modifications (e.g. transmission windows) to avoid production complexity at limited take rates.

### B 2.2.2.5 Mass Production Capability

In addition to low cost conditions the mass production of automotive electronics requires a stable supply situation of really all components (one missing component can stop a whole carline production) and very stable (99.99% yield) manufacturing processes to guarantee a continuous just in time supply. While this looks achievable in the 24 GHz area it is currently still a significant challenge around 77 GHz because of an immature component market (e. g. no second sourcing for 77 GHz components) and immature manufacturing processes (e. g. high precision flip-chip bonding).

### B 2.2.2.6 Frequency Allocation

The automotive SRRs need to find space for a bandwidth of > 3 GHz at very low power levels (-30 dBm EIRP measured in 1 MHz RBW) in parallel with an allocation of the SRD band with high power levels of +20 dBm EIRP measured in 1 MHz RBW located in the center of the low power SRD band from 24.05 GHz to 24.25 GHz. Figure XX3 illustrates the actual ERC/REC 70-03 frequency allocation for the different bands.. In addition the automotive application needs a globally available frequency allocation.

**Fig.: B10 Automotive SRR requirements versus ERC Rec 70-03 Frequency**

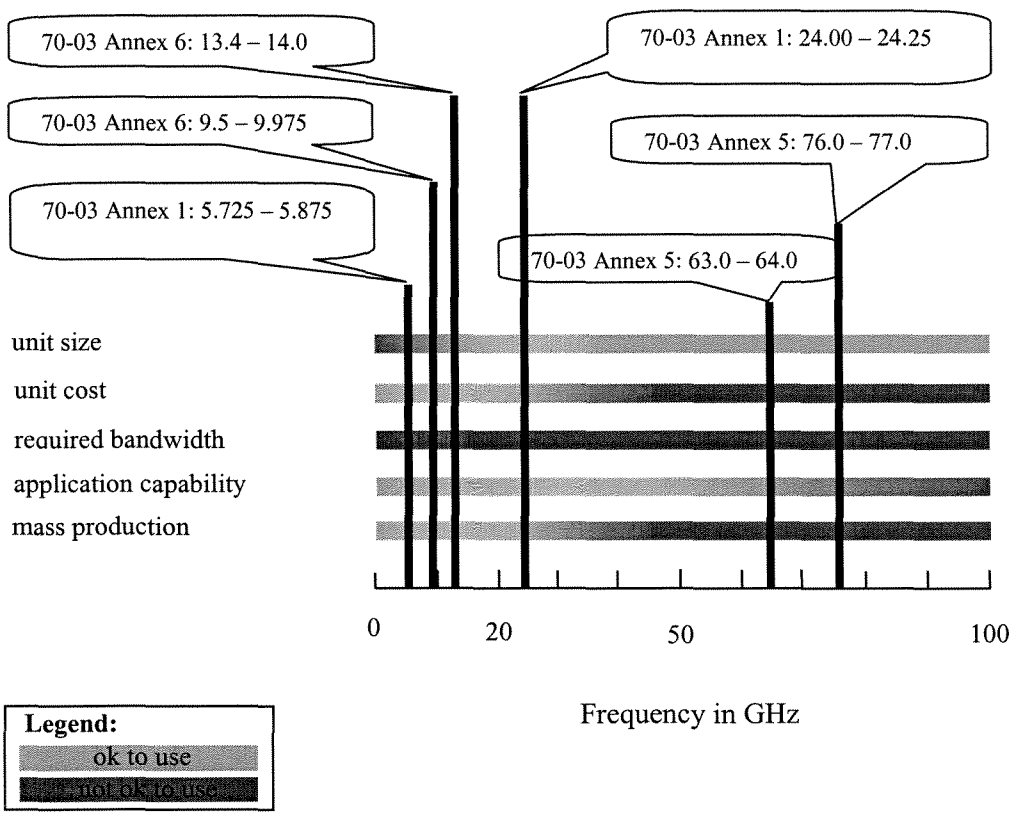


A comparison of the 70-03 frequency bands with the requirements of the automotive SRRs clearly recommends the allocation of the motion detection operating mode into the 24 .00 .. 24.25 GHz SRD band. This band is also globally available as an ISM band which supports the important requirement for worldwide useable devices (not fullfilled for 13.4-14GHz). The possibility of harmful interference to and from established services when operating in the ultra low

power region of the proposed emission mask needs to be investigated by compatibility and coexistence studies including tests. The interference potential of the automotive SRRs is minimized by reducing the output power outside the SRD band to extremely low levels below the given spurs limit.

## B.2.3 Bandwidth and other radio parameters

Fig.: B11, Transmitter mask, PSD levels are in 1 MHz Bandwidth

**TRANSMITTER MASK**

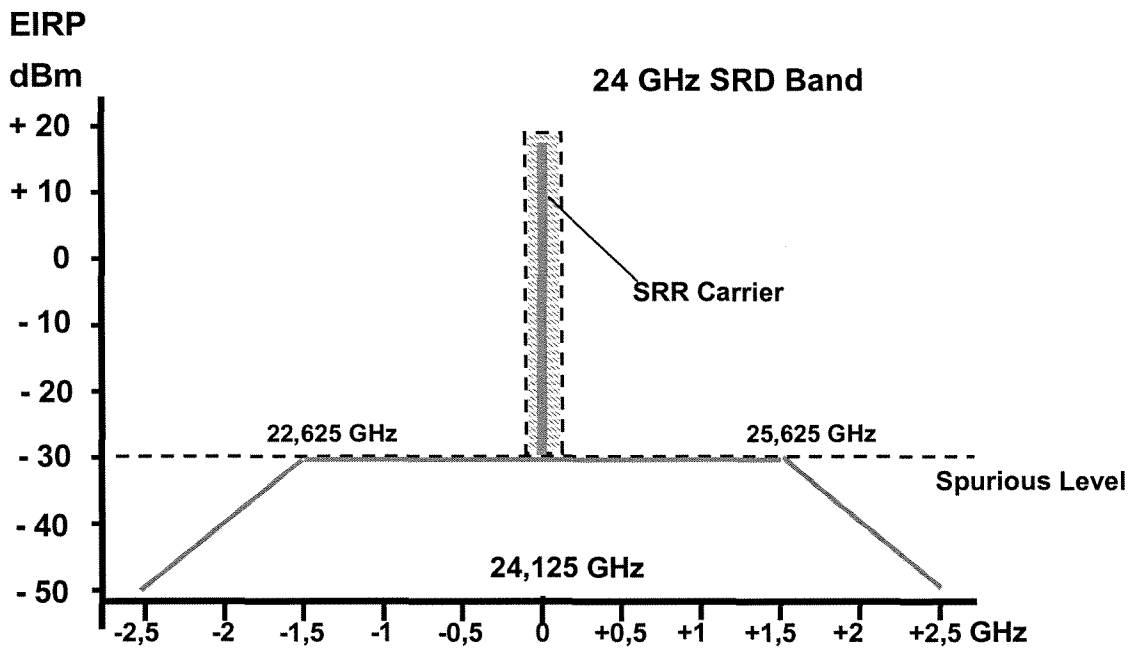


**Figure B.5**

The mean PSD defined in the transmitter mask and defined with respect to a reference bandwidth of 1MHz. (-30dBm in 1MHz , equivalent -90dBm/Hz for a single SRR sensor).
The PSD shall be measured with a RBW of *100 kHz* to support designs which provide a "steady" or smooth spectral density instead of discrete comb lines.

If the system concept utilizes additional time gating, the minimum VBW is specified to 100 kHz. This support designs, which utilise a fast PN code and peak correction of block codes of digital communication systems could be possible. Furthermore in case of additional time gating the SA shall be switched into "peak (max) hold" mode. If the system does not utilize further time gating, the minimum VBW is specified to 1 kHz (according to ETSI EN 301 091-1 [3], clause 7.1.3).

Peak behaviour (the following clarification has been added in response to questions from ETSI-ERM-TM4):

With the measurement conditions proposed (100kHz RBW, 100 kHz VBW, "peak max hold") for pulsed or time gated transmitters, the spectrum mask effectively describes a **peak** PSD for narrow band victim receivers with a BW < 100kHz. However the mask describes only a **mean** PSD for wideband victim receiver systems, which utilize channel capacities higher then the measurement bandwidth mentioned above (e.g. fixed services with a BW of 50MHz. In such case of a wideband victim receiver with a BW >100kHz, the PDCF = $20\log(BW_{TX} / 50MHz)$ may be utilised to calculate the peak power in 50MHz).

The peak power evaluation during the compatibility studies depends on the one hand on properties of the transmitter system (e.g. PEP, pulse duration, duty cycle, freq. hopping position...) and on the other hand on properties of the considered victim receiver (e.g. IF-bandwidth of all stages, data rate, processing gain...).Therefore the evaluations should be performed case by case. FCC NPRM and LS of TM4 to SE24 take a worst case BW of 50MHz of a fixed service receiver into account.

**Limitation of vertical antenna characteristic**

The vertical antenna pattern shall be limited according table 3 with respect to the maximum antenna gain. The vertical antenna angle is positioned on 0° for a vector direction parallel to ground and on –90° for a vector direction from top to ground. The antenna's co-polar elevation RPE (radiation pattern envelope) shall be measured within the azimuth plane of EIRP_max.

**Limitation of vertical antenna pattern**

| Vertical antenna angle θ in ° | spatial antenna gain |
|---|---|
| θ < -75° and θ > 45° | G_dBi_max –30 dB |
| -75° < θ < -30° | G_dBi_max + 0,666 × [dB/°](θ +30°) |
| -30° < θ < 0° | G_dBi_max |
| 0° < θ < 45° | G_dBi_max – 0,666 × θ [dB/°] |

The mounting height is limited to maximum 1,50 m (according to the draft EN 301 091-1 [3], clauses 7.2.3.3 and 7.2.3.4).

## B.3 Information on current version of relevant ETSI standard

The EN 301 091 [3] covers RTTT Radar equipment used for 77 GHz Adaptive Cruise Control (ACC) systems.

The standard needs amending to include 24 GHz short-range radar applications and to cover the different technologies for SRR functions.

# Annex C (informative): Expected compatibility issues

## C.1 Coexistence studies (if any)

Primary Services in the range of 21,625 GHz to 26,625 GHz:

- fixed Links; Note 1
- Astronomy; Note 2
- Space research; Note 2
- Inter Satellite;
- Mobile;
- Earth exploration-Satellite. Note 2

Secondary services:

- SRD's operating in the ISM band;
- Amateur radio;
- Amateur Satellite.

Note 1 concerning fixed links (from T-Nova, Alcatel and TM4):

"The frequency bands adjacent to the 24 GHz ISM band are heavily used by the FS for infrastucture purposes for GSM, and they will also be used for UMTS infrastructure in the future. Concerns related to possible harmful interference to the FS from SRR at 24 GHz were already expressed in June 2001 by several ETSI members. Sharing scenarios and coexistence studies between automotive Short Range Radars (SRR) in 24 GHz SRD band and Fixed Service (FWA in 26 GHz and P-P in 23 and 26 GHz bands) performed in the meantime by TM4 prove the expected incompatibility. These studies [document RM19(01)SA21rev1] have also been forwarded to ECC Project Team SE24."

(A *Note from the editor: the final SE compatibility report will consider and validate this and other coming contributions )*

Note 2: Concerning passive services (from T-Nova, Alcatel and TM4):

" Current use of of the SRR system is in conflict with the RR Footnote 5.340, which prohibits all emissions in the passive band 23.6 - 24.0 GHz. This Footnote protects the Radioastronomy Service, the Earth Exploration Satellite Service as well as the Space Exploration Service.
Sharing criteria must not be developed in this band because any emissions are prohibited. Changes of that Footnote can only be made by a future competent WRC. There are serious doubts whether there will be any agreement among ITU-R to change or even to abolish that Footnote."

Furthermore it must be mentioned that the frequency range of 76 – 77 GHz has been identified for automotive SRR-applications more than 10 years ago, i.e.this band is harmonized on an European level for automotive SRR applications. Concerning the required bandwidthfor SRR systems, one has to take into account that the frequency range 76 – 81 GHz (5 GHz in total) is allocated to the radiolocation service on a primary basis. This band or parts of it – could be the ideal frequency band for automotive applications. " .

Note 3 concerning the handling of the regulatory and coexistance issues (from SIEMENS AT):

"In response to the proposals and comments of Benoist Deschamps and Thomas Rosowski concerning to the TR 101 982 R1 document please take into consideration the following remarks:

1) The voting and approval of the TR 101 982 R1 is actually only within TG31 group. The revision of TR 101 982 was mainly done due to the demand of several ETSI and ERM groups who required more technical explanation and details on the SRR automotive radars. This information is necessary to provide sufficiant input to start theoretical and practical coexistance studies. The document has to be approved within TG31 until January 6th, 2002.

Siemens VDO Automotive has approved the latest version distributed via RMTG31 reflector (of course there are always modifications and amendments possible to a document, but for its purpose the document has reached a satisfying mature status).

2) The comments regarding Footnote RR S5.320 are of regulative matter and don't reside within the scope of the system reference document TR 101 982. SE 21 will cope with the regulatory aspects of the above mentioned footnote S5.320.

3) The TR 101 982 document describes in detail the reasons why the frequency band from 76 to 77 GHz can't be used in the appropriated and required manner.

This rationale covers the 5 GHz extension proposal made above 77 GHz to accomodate the wideband spectrum needed for automotive radars.

4) The SRR operating parameters provided in the TR 101 982 R1 document are only typical values as input for theoretical coexistance study calculations. Incompatibility as such is never possible, as parameters can always be changed to reach compatibility. The absolute values of such parameters have to be reflected with the existing regulative limits to avoid overestimated worst case assumptions that would make operation of nearly all radio frequency emitting devices impossible.

Also, as mentioned under 1), during the SE process of completing the compatibility studies, the PTSE24 must run the theoretical as well as practical coexistance studies and consider both in the conclusive final compatibility report.

5) We fully agree that SRR automotive devices must not produce any harmful interference to other frequency users. The SRR systems will be designed to stay below the harmful interference levels."

## C.2 Current ITU allocations

Same as under clause C.1 of the present document, plus radio navigation

## C.3 Sharing issues

Compliance evaluation and studies are to be conducted for sharing with services under clauses C.1 and C.2 of the present document. Especially the fixed link and astronomy services require sharing studies.

# Annex D (informative): Item check lists

1. Approval of S.R. Doc R1 by TG31 (done) and ERM RM
2. Liaison Statement to SRD MG / WGFM
3. Liaison statement to WGSE to start sharing studies
4. Completion of sharing studies and approval of modulation emissions
5. Amendmend of SRD Rec 70-03

# Annex E (informative): Bibliography

The EU Approach to Road Safety and Intelligent Transport systems (ITS), EU Commission Unit INFSO/B/5, Fotis Karamamitsos, http://www.cordis.lu/ist/ka1.

RESPONSE, Project TR4022, Advanced Driver assistance Systems, System safety and driver performance. http://www.cordis.lu/telematics/tap_transport/research/projects/response.html.

Prof. Peter Knoll, Martin Reiche, Robert Bosch GmbH, "Short Range Automotive Radar (SRR) ERO/ERC workshop on regulatory issues regarding introduction of UWB in Europe. 20 March 2001, – RegTP in Mainz http://www.ero.dk/eroweb/srd/SRD-UWB.htm.

Bundesanstalt für Strassenwesen (BAST), "Volkswirtschaftliche Kosten der Personenschäden im Strassenverkehr", Publication of BAST, Issue M102, January 1999, Authors Herbert Baum, K-J Höhnscheid, University of Cologne.

# History

| Document history | | |
|---|---|---|
| V1.1.1 | July 2001 | Publication |
| V1.1.2 | August 2001 | Publication |
| V1.1.3 | ~~Dec 2001~~Jan 9th 02 | Draft revision – version for or RM approval |
| | | |
| | | |