pattern vertical downtilt; (5) total EIRP; and (6) height Above Ground Level (AGL).[9] Attached as Exhibit B are antenna specification sheets for each of the antenna types described in Exhibit A.

Grant of Sirius' request for STA would clearly serve the public interest. STA would allow Sirius to incorporate terrestrial repeaters in its initial commercial rollout thus ensuring there would be no further delay in nationwide deployment, and no reduction in the quality of service. Grant of the STA would allow the public to take advantage of long-awaited satellite DARS service, offering both an increase in listening choices and greatly improved digital quality sound.

As the Commission is well aware, one decade has passed since Sirius filed its initial application to construct, launch, and operate a satellite DARS system. Sirius has successfully launched all of its satellites, and now holds all the FCC authorizations currently required to provide satellite DARS programming to the public. However, the FCC has not yet issued final rules governing operation of our terrestrial repeaters.

Sirius has established that its terrestrial repeaters will not cause harmful interference to other radio services.[10] Nevertheless, Sirius will immediately cease operations of a repeater operating pursuant to STA upon notification of interference to a lawfully operated radiocommunication station. Sirius' repeaters also will not (1) originate any original programming, (2) transmit signals other than those used by its satellites or (3) extend satellite DARS coverage outside of the satellites' authorized service area.[11] Sirius certifies that the out-of-band emissions of these terrestrial repeaters will be attenuated below the transmitted EIRP by no less than 75 + 10 log (P).

In accordance with Part 17 of the Commission's Rules, Sirius has or will notify the Federal Aviation Administration ("FAA") of antenna structures for which such notification is required. 47 C.F.R. § § 17.7-17.17. Sirius hereby certifies that operation of these repeaters will not have a significant environmental effect, as defined by 47 C.F.R. § § 1.1301-1.1319, and that no party to this application is subject to a denial of federal benefits pursuant to Section 5301 of the Anti-Drug Abuse Act of 1988, 21 U.S.C. § 862(a).

---

[9] Sirius has not included this information for the low power repeaters (*i.e.*, EIRP of 2 kW or less) it seeks to operate pursuant to this STA.

[10] *In the Matter of Establishment of Rules and Policies for the Digital Audio Radio Service in 2310-2360 MHz Frequency Band, Supplemental Comments of Sirius Satellite Radio* (Jan. 18, 2000).

[11] *Terrestrial Repeater NPRM*, 12 FCC Rcd at 5845-46 (Appendix C).

If there are any questions concerning this request, please do not hesitate to contact the undersigned.

Sincerely,

Robert D. Briskman

Robert D. Briskman
Technical Executive
Sirius Satellite Radio Inc.

CERTIFICATE OF SERVICE

I hereby certify that a true and correct copy of the foregoing **Request for Special Temporary Authority to Operate Satellite DARS Terrestrial Repeaters** was delivered via hand-delivery, on this 24th day of July, 2001 to each of the following:

Donald Abelson
International Bureau
Federal Communications Commission
445 Twelfth Street, S.W. Room 6-C750
Washington, DC 20554

Ron Repasi
International Bureau
Federal Communications Commission
445 Twelfth Street, S.W., Room 6-A505
Washington, DC 20554

Chris Murphy
International Bureau
Federal Communications Commission
445 Twelfth Street, S.W., Room 6-C437
Washington, DC 20554

Jennifer Gilsenan
International Bureau
Federal Communications Commission
445 Twelfth Street, S.W., Room 6-A520
Washington, DC 20554

Claudia L. Cartagena

EXHIBIT A

Sirius Satellite Radio

Market	No Of Sectors	Antenna Type	Sector 1				Sector 2				Sector 3				Coordinates		Antenna Height (feet)
			Antenna Beamwidth	Orientation	Downtilt	EIRP (Watts)	Antenna Beamwidth	Orientation	Downtilt	EIRP (Watts)	Antenna Beamwidth	Orientation	Downtilt	EIRP (Watts)	Longitude (W)	Latitude (N)	
Akron	1	HMD8V90-R05-H	90	320	0	14125.38	-	-	-	-	-	-	-	-	81-30-14.00	41-03-53.00	150
Albany	1	HMD8V360-R05-H	Omni	-	-	8511.38	-	-	-	-	-	-	-	-	73-45-55.80	42-39-32.18	178
Albuquerque	1	HMD8V90-R05-H	90	230	0	22387.21	-	-	-	-	-	-	-	-	106-26-58.50	35-12-46.50	65
Atlanta	2	HMD8PV180-R05-H	180	0	0	6309.57	180	180	0	7943.28	-	-	-	-	84-23-13.19	33-45-39.46	1016
Atlanta	1	HMD8V120-R05-H	120	250	0	19952.62	-	-	-	-	-	-	-	-	84-20-07.00	33-55-16.00	443
Atlanta	2	HMD8V90-R05-H	90	30	0	8317.64	90	150	0	7585.78	-	-	-	-	84-28-25.09	33-53-59.70	228
Atlanta	2	HMD8V90-R05-H	90	45	0	10715.19	90	180	0	10964.78	-	-	-	-	84-22-39.00	33-51-07.00	231
Atlanta	2	HMD8PV180-R05-H	180	0	0	7585.78	180	180	0	7413.10	-	-	-	-	84-23-25.80	33-47-54.60	154
Austin	1	HMD8V120-R05-H	120	175	0	12589.25	-	-	-	-	-	-	-	-	97-44-29.00	30-17-00.00	292
Baltimore	1	HMD8PV180-R05-H	180	0	0	9332.54	-	-	-	-	-	-	-	-	76-36-50.12	39-17-15.41	526
Birmingham	1	HMD8V360-R05-H	Omni	-	-	8241.38	-	-	-	-	-	-	-	-	86-48-30.00	33-31-04.00	537
Boston	1	HMD8V360-R05-H	Omni	-	-	7943.28	-	-	-	-	-	-	-	-	71-03-41.2	42-21-30.60	554
Buffalo	1	HMD8V90-R05-H	90	30	0	9332.54	-	-	-	-	-	-	-	-	78-52-35.00	42-52-47.00	580
Charlotte	1	HMD8PV180-R05-H	180	65	0	10471.29	-	-	-	-	-	-	-	-	80-50-49.74	35-13-29.49	524
Chicago	2	HMD8V90-R05-H,HMD8V120-R05-H	120	235	0	3090.30	90	340	0	3019.95	-	-	-	-	87-37-17.81	41-53-6.68	996
Chicago	2	HMD8V120-R05-H	120	170	0	5623.41	120	340	0	5128.61	-	-	-	-	87-38-21.13	41-55-33.28	286
Chicago	2	HMD8V90-R05-H	90	180	0	4265.80	90	310	0	3388.44	-	-	-	-	87-39-18.00	41-58-50.00	489
Cincinnati	2	HMD8PV180-R05-H	180	170	0	8511.38	180	350	0	7585.78	-	-	-	-	84-30-51.00	39-06-24.00	308
Cleveland	2	HMD8V120-R05-H	120	70	0	7585.78	120	260	0	6606.93	-	-	-	-	81-41-34.37	41-29-58.50	656
Columbus	1	HMD8V360-R05-H	Omni	-	-	5370.32	-	-	-	-	-	-	-	-	82-59-46.00	39-57-47.00	442
Dallas	2	HMD8V120-R05-H	120	80	0	8511.38	120	260	0	8511.38	-	-	-	-	96-47-52.23	32-47-8.95	489
Dallas	1	HMD8PV180-R05-H	180	240	0	10000.00	-	-	-	-	-	-	-	-	97-19-46.00	32-45-11.00	525
Dayton	1	HMD8V120-R05-H	120	115	0	5888.44	-	-	-	-	-	-	-	-	84-11-46.00	39-45-39.00	240
Denver/Boulder	2	HMD8PV180-R05-H	180	150	0	6309.57	180	330	0	7585.78	-	-	-	-	104-59-22.06	39-44-52.04	598
Detroit	1	HMD8V120-R05-H	120	330	0	16218.10	-	-	-	-	-	-	-	-	83-02-51.00	42-19-50.00	648
Detroit	2	HMD8V45-R05-H	45	90	0	19952.62	45	315	0	19952.62	-	-	-	-	83-14-35.42	42-28-28.15	389
Fresno	1	HMD8V90-R05-H	90	120	0	22387.21	-	-	-	-	-	-	-	-	119-52-56.90	36-48-59.50	180
Greensboro	1	HMD8V90-R05-H	90	240	0	14125.38	-	-	-	-	-	-	-	-	79-45-38.10	36-05-10.30	504
Harrisburg	1	HMD8V90-R05-H	90	140	0	22387.21	-	-	-	-	-	-	-	-	76-56-45.00	40-19-07.00	178
Hartford	1	HMD8V360-R05-H	Omni	-	-	6309.57	-	-	-	-	-	-	-	-	72-40-32.00	41-46-06.00	383
Houston	2	HMD8V90-R05-H	90	175	0	9772.37	90	295	0	9772.37	-	-	-	-	95-21-50.00	29-45-37.00	1060
Indianapolis	1	HMD8V360-R05-H	Omni	-	-	8709.64	-	-	-	-	-	-	-	-	86-09-20.00	39-46-13.00	532
Jacksonville	1	HMD8PV180-R05-H	180	345	0	6918.31	-	-	-	-	-	-	-	-	81-39-24.00	30-19-08.00	436
Kansas City	2	HMD8V90-R05-H	90	115	0	12302.69	90	205	0	11481.54	-	-	-	-	94-34-57.00	39-06-12.00	558
Knoxville	1	HMD8V90-R05-H	90	90	0	22387.21	-	-	-	-	-	-	-	-	84-01-22.60	35-57-46.20	265
Las Vegas	2	HMD8PV180-R05-H	180	20	0	4466.84	180	200	0	4570.88	-	-	-	-	115-08-31.00	36-10-10.10	466
Las Vegas	1	HMD8V120-R05-H	120	105	0	7943.28	-	-	-	-	-	-	-	-	115-10-00.00	36-07-57.00	401
Little Rock	1	HMD8V360-R05-H	Omni	-	-	5623.41	-	-	-	-	-	-	-	-	92-16-32.48	34-44-37.67	586
Los Angeles	3	HMD8V120-R05-H	120	0	3	3715.35	120	120	3	3715.35	120	240	3	3715.35	118-15-22.00	34-02-58.00	868
Los Angeles	2	HMD8V90-R05-H	90	60	0	7943.28	90	215	0	7943.28	-	-	-	-	118-27-35.00	34-03-03.00	273
Los Angeles	2	HMD8PV180-R05-H	180	110	0	5011.87	180	290	0	5011.87	-	-	-	-	118-23-55.00	34-03-20.00	158
Los Angeles	2	HMD8PV180-R05-H	180	45	0	4265.80	180	225	0	4677.35	-	-	-	-	118-21-04.55	34-03-44.18	372
Los Angeles	2	HMD8PV180-R05-H	180	90	0	4365.16	180	270	0	5623.41	-	-	-	-	118-18-34.00	34-03-41.00	302
Los Angeles	1	HMD8V45-R05-H	45	110	0	16595.87	-	-	-	-	-	-	-	-	118-11-44.00	34-09-48.00	78
Los Angeles	1	HMD8V90-R05-H	90	10	0	10232.93	-	-	-	-	-	-	-	-	118-15-26.39	34-08-29.27	98
Los Angeles	2	HMD8V90-R05-H	90	135	0	7943.28	90	225	0	7943.28	-	-	-	-	118-11-09.00	33-48-03.00	148
Los Angeles	2	HMD8V90-R05-H	90	0	0	7943.28	90	180	0	7943.28	-	-	-	-	117-52-8.01	33-45-34.23	120
Los Angeles	2	HMD8PV180-R05-H	180	135	0	5011.87	180	315	0	5011.87	-	-	-	-	117-52-52.00	33-41-22.00	159
Los Angeles	2	HMD8V90-R05-H	90	30	0	6918.31	90	290	0	6918.31	-	-	-	-	118-22-03.00	34-07-34.00	50
Los Angeles	1	HMD8V120-R05-H	120	290	0	7079.48	-	-	-	-	-	-	-	-	118-27-55.86	34-09-15.13	218
Louisville	1	HMD8V360-R05-H	Omni	-	-	5623.41	-	-	-	-	-	-	-	-	85-45-28.00	38-15-20.00	560
Memphis	1	HMD8V360-R05-H	Omni	-	-	21379.63	-	-	-	-	-	-	-	-	90-2-59.80	35-8-39.70	358
Miami	2	HMD8V90-R05-H	90	0	0	12022.84	90	230	0	12682.50	-	-	-	-	80-11-31.00	25-46-19.00	596

Sirius Satellite Radio

Market	No Of Sectors	Antenna Type	Sector 1				Sector 2				Sector 3				Coordinates		Antenna Height (feet)
			Antenna Beamwidth	Orientation	Downtilt	EIRP (Watts)	Antenna Beamwidth	Orientation	Downtilt	EIRP (Watts)	Antenna Beamwidth	Orientation	Downtilt	EIRP (Watts)	Longitude (W)	Latitude (N)	
Miami	1	HMD8V90-R05-H	90	0	0	18620.87	-	-	-	-	-	-	-	-	80-08-30.84	26-06-50.67	640
Milwaukee	1	HMD8PV180-R05-H	180	310	0	15488.17	-	-	-	-	-	-	-	-	87-54-06.69	43-02-17.95	588
Minneapolis	2	HMD8V120-R05-H	120	90	0	5370.32	120	270	0	4468.84	-	-	-	-	93-16-16.00	44-58-36.00	775
Minneapolis	1	HMD8V90-R05-H	90	135	0	8912.51	-	-	-	-	-	-	-	-	93-05-43.00	44-58-52.00	500
Monterey	1	HMD8PV180-R05-H	180	180	0	8912.51	-	-	-	-	-	-	-	-	121-51-24.00	36-36-26.00	135
Nashville	1	HMD8V360-R05-H	Omni	-	-	6165.95	-	-	-	-	-	-	-	-	86-46-55.09	36-09-48.85	868
New Haven	1	HMD8PV180-R05-H	180	250	0	10715.19	-	-	-	-	-	-	-	-	72-55-20.00	41-18-33.00	243
New Orleans	1	HMD8V360-R05-H	Omni	-	-	10351.42	-	-	-	-	-	-	-	-	90-04-16.00	29-57-00.00	626
New York	1	HMD8V360-R05-H	Omni	-	-	8912.51	-	-	-	-	-	-	-	-	73-58-56.20	40-45-33.00	670
New York	2	HMD8V90-R05-H	90	140	0	12589.25	90	340	0	12589.25	-	-	-	-	73-57-01.70	40-46-30.00	560
New York	1	HMD8PV180-R05-H	180	210	0	15848.93	-	-	-	-	-	-	-	-	74-00-40.32	40-42-29.88	524
New York	1	HMD8V360-R05-H	Omni	-	-	8912.51	-	-	-	-	-	-	-	-	73-59-48.00	40-42-54.00	474
New York	2	HMD8PV180-R05-H	180	30	0	6165.95	180	210	0	6606.93	-	-	-	-	73-54-19.50	40-51-57.50	170
New York	2	HMD8PV180-R05-H	180	0	0	5754.40	180	180	0	5888.44	-	-	-	-	73-56-36.00	40-48-54.00	180
New York	2	HMD8PV180-R05-H	180	110	0	6309.57	180	290	0	7943.28	-	-	-	-	73-58-22.53	40-51-18.12	210
New York	1	HMD8PV180-R05-H	180	110	0	16218.10	-	-	-	-	-	-	-	-	74-00-03.00	40-47-25.00	436
New York	2	HMD8PV180-R05-H	180	90	0	7943.28	180	270	0	7943.28	-	-	-	-	73-45-44.75	41-01-51.38	261
Newark	1	HMD8V360-R05-H	Omni	-	-	8912.51	-	-	-	-	-	-	-	-	74-10-11.00	40-44-07.00	334
Norfolk	1	HMD8V360-R05-H	Omni	-	-	6760.83	-	-	-	-	-	-	-	-	76-17-29.21	36-50-44.47	270
Oklahoma City	1	HMD8V90-R05-H	90	190	0	22387.21	-	-	-	-	-	-	-	-	97-29-22.00	35-35-52.00	400
Orlando	2	HMD8PV180-R05-H	180	0	0	2511.89	180	180	0	2630.27	-	-	-	-	81-22-44.32	28-32-37.45	312
Philadelphia	2	HMD8V120-R05-H	120	120	0	8317.64	120	280	0	9332.54	-	-	-	-	75-10-11.00	39-57-13.00	758
Phoenix	2	HMD8PV180-R05-H	180	0	0	5888.44	180	180	0	7585.78	-	-	-	-	112-04-23.66	33-28-37.70	298
Pittsburgh	2	HMD8V120-R05-H	120	90	0	9332.54	120	270	0	10000.00	-	-	-	-	79-59-42.00	40-26-29.00	690
Portland	2	HMD8V90-R05-H	90	0	0	3801.89	90	190	0	3715.35	-	-	-	-	122-40-33.74	45-30-47.16	464
Providence	1	HMD8V360-R05-H	Omni	-	-	8912.51	-	-	-	-	-	-	-	-	71-24-36.94	41-49-29.33	421
Raleigh	1	HMD8PV180-R05-H	180	0	0	10000.00	-	-	-	-	-	-	-	-	78-38-25.00	35-46-27.00	458
Richmond	2	HMD8V120-R05-H	120	65	0	6456.54	120	305	0	5370.32	-	-	-	-	77-26-06.00	37-32-11.94	369
Rochester	2	HMD8V90-R05-H	90	130	0	10471.29	90	220	0	11481.54	-	-	-	-	77-36-33.00	43-09-23.00	365
Sacramento	1	HMD8PV180-R05-H	180	5	0	15848.93	-	-	-	-	-	-	-	-	121-29-27.00	38-34-28.00	140
Salt Lake City	1	HMD8V90-R05-H	90	290	0	8912.51	-	-	-	-	-	-	-	-	111-51-02.40	40-45-28.80	135
San Antonio	1	HMD8V90-R05-H	90	110	0	10471.29	-	-	-	-	-	-	-	-	98-29-32.00	29-25-42.00	428
San Diego	2	HMD8V120-R05-H	120	60	0	6309.57	120	240	0	6309.57	-	-	-	-	117-09-43.28	32-42-57.70	450
San Francisco	2	HMD8V45-R05-H,HMD8V120-R05-H	120	25	0	10000.00	45	130	0	19952.62	-	-	-	-	122-26-03.00	37-41-12.00	100
San Francisco	1	HMD8V120-R05-H	120	50	0	15848.93	-	-	-	-	-	-	-	-	122-27-05.00	37-45-20.00	382
San Jose	1	HMD8V90-R05-H	90	270	0	25118.86	-	-	-	-	-	-	-	-	121-45-11.23	37-19-20.08	20
Santa Cruz	1	HMD8PV180-R05-H	180	180	0	8912.51	-	-	-	-	-	-	-	-	121-59-45.00	36-59-35.50	60
Seattle	2	HMD8V120-R05-H	120	180	0	9549.93	120	330	0	8709.64	-	-	-	-	122-19-41.77	47-36-18.71	943
Springfield	1	HMD8V90-R05-H	90	90	0	14125.38	-	-	-	-	-	-	-	-	72-35-33.50	42-06-09.50	445
St. Louis	2	HMD8V90-R05-H	90	135	0	9549.93	90	225	0	10232.93	-	-	-	-	90-11-26.00	38-37-48.00	482
Syracuse	2	HMD8V90-R05-H	90	160	0	6918.31	90	280	0	6025.60	-	-	-	-	76-08-32.00	43-02-49.00	207
Tampa	1	HMD8V360-R05-H	Omni	-	-	10000.00	-	-	-	-	-	-	-	-	82-27-33.00	27-58-48.00	676
Tucson	1	HMD8V120-R05-H	120	135	0	11220.18	-	-	-	-	-	-	-	-	110-58-16.50	32-13-20.10	265
Tulsa	1	HMD8V90-R05-H	90	240	0	15848.93	-	-	-	-	-	-	-	-	95-57-10.85	36-10-10.02	400
Washington D.C.	1	HMD8V360-R05-H	Omni	-	-	6918.31	-	-	-	-	-	-	-	-	77-00-41.00	38-53-48.00	156
Washington D.C.	1	HMD8V360-R05-H	Omni	-	-	10715.19	-	-	-	-	-	-	-	-	77-04-35.06	38-53-43.60	198
Washington D.C.	2	HMD8V120-R05-H	120	90	0	9549.93	120	250	0	8912.51	-	-	-	-	77-03-39.00	38-51-45.00	208
Washington D.C.	1	HMD8V360-R05-H	Omni	-	-	4897.79	-	-	-	-	-	-	-	-	77-06-55.87	38-50-36.60	208
Washington D.C.	3	HMD8V120-R05-H	120	90	0	6025.60	120	210	0	6165.95	120	330	0	5754.40	77-05-44.00	38-59-07.00	200
Wilmington	1	HMD8V90-R05-H	90	225	0	14125.38	-	-	-	-	-	-	-	-	75-32-49.00	39-44-53.00	430
Winston-Salem	1	HMD8V90-R05-H	90	30	0	14125.38	-	-	-	-	-	-	-	-	80-15-05.00	36-05-24.00	330

EXHIBIT B

HMD Series Antennas for MMDS/ITFS and Wireless Cable Applications

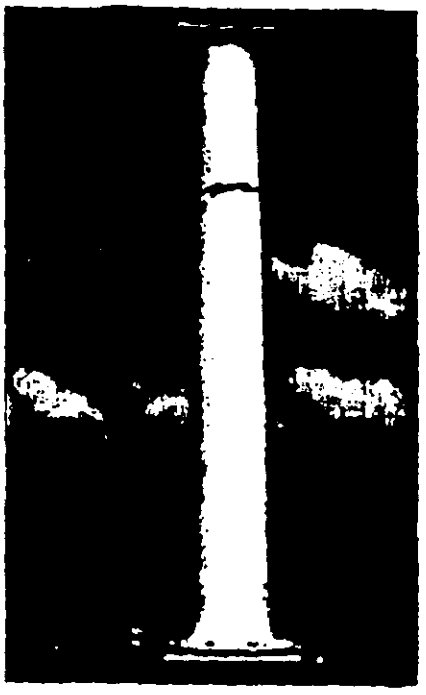

Features

- *Pressurizable, radome enclosed for long, trouble-free life*
- *Excellent VSWR performance*

  1.35:1 max for W-Band
  1.5:1 max for other bands
- *Optimized beam tilt*

  0.5 °Standard for 8, 12, and 16 bay
  0.75 °Standard for 24 and 32 bay
  Others available on request
- *High power handling - 800 watts typical*
- *Wide selection of frequency bands and patterns*
- *Horizontal or vertical polarization*
- *Suitable for analog or digital transmission*
- *Null fill for excellent coverage*

Standard Mounting Configurations

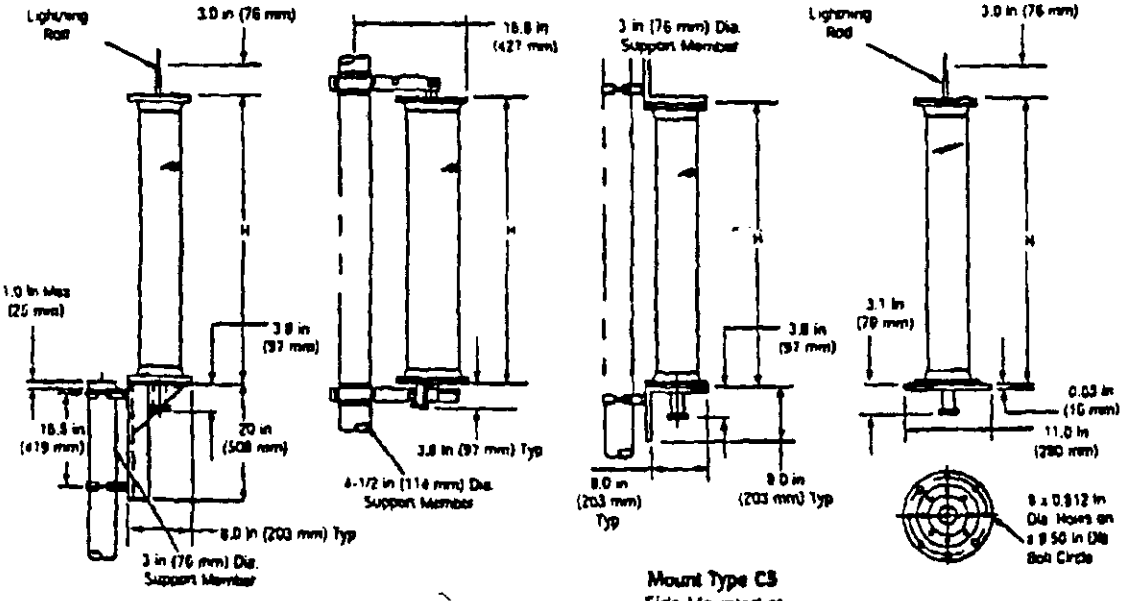

Mount Type A
Side Mounted at Top of Tower

Mount Type B
Side Mounted at Side of Tower

Mount Type CS
Side Mounted at Side of Tower

Mount Type CB
Has Bracket at Top and Bottom of Mount for Additional Support

Mount Type D
Top Mounted at Top of Tower

HMD Series Antennas
Elevation Patterns

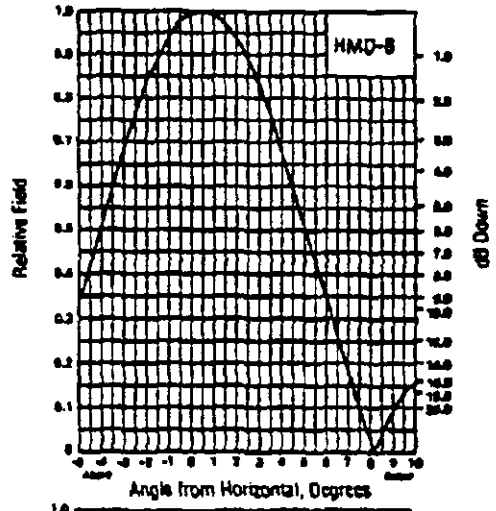

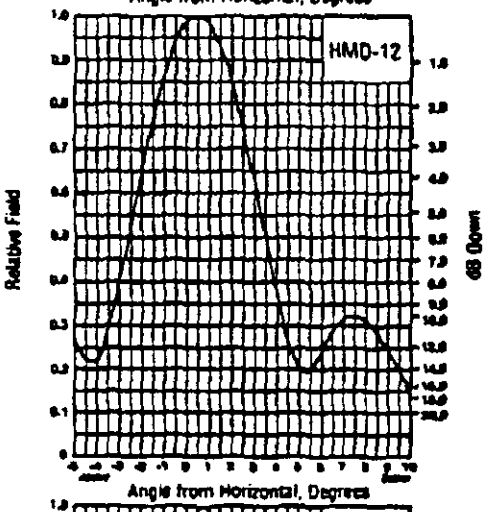

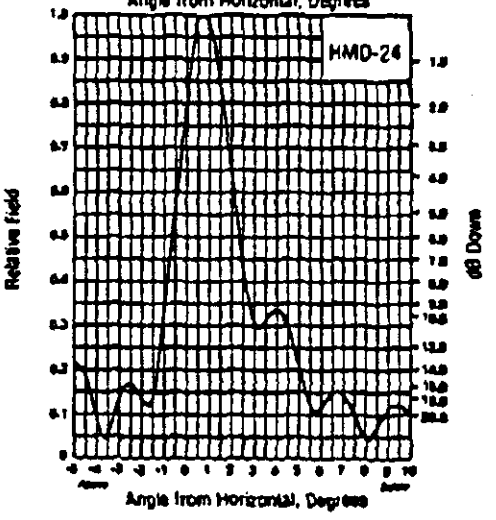

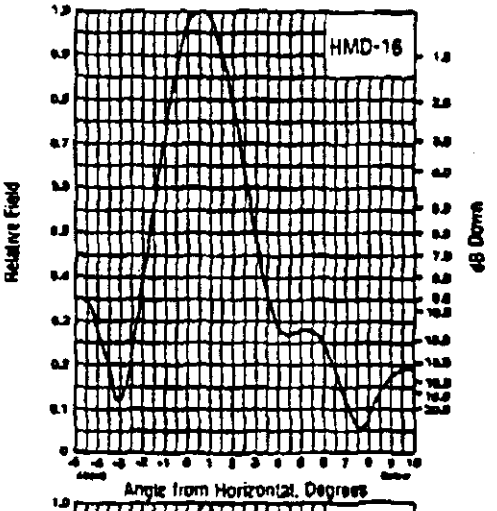

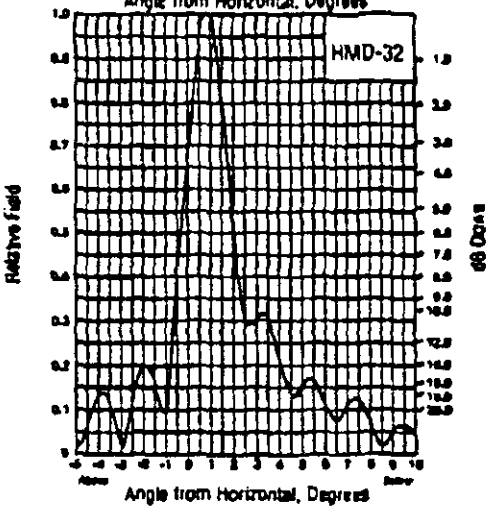

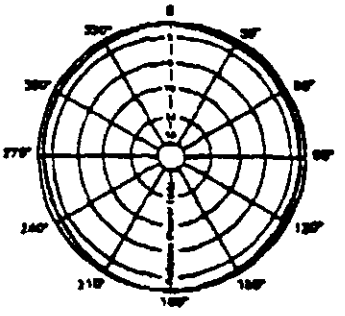

Omnidirectional

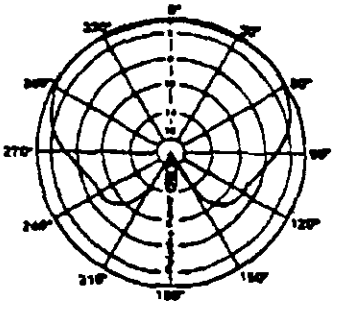

Horizontal Cardioid

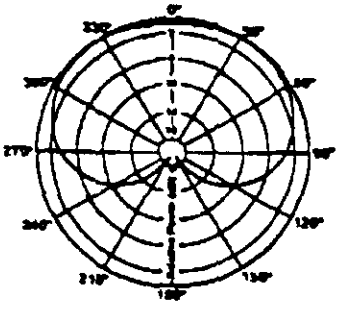

Vertical Cardioid

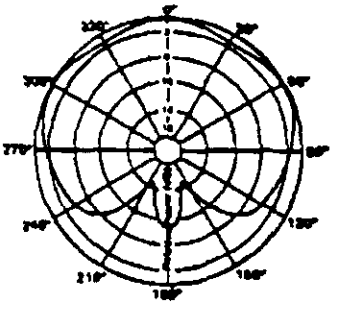

Wide Horizontal Cardioid

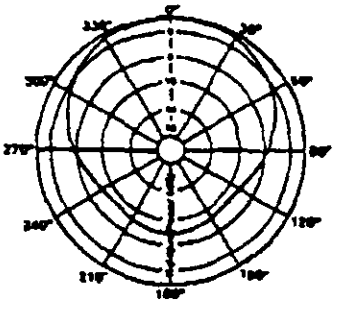

Narrow Horizontal Cardioid

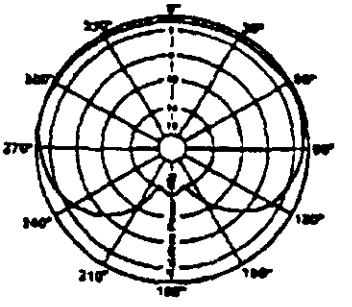

Wide Vertical Cardioid

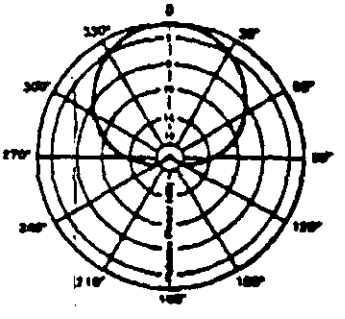

Narrow Vertical Cardioid

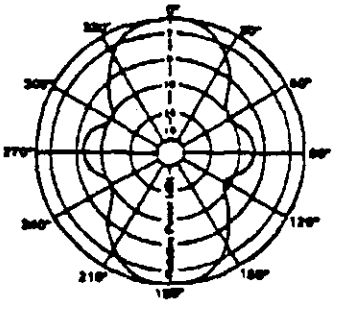

Horizontal Peanut

List for Andrew Antennas for Sirius Radio Deployment

Andrew Corporation Products Antennas	Product Description	Power Gain (dBi)	Average Input Power (W)	Null Fill (%)	E-Plane Beamwidth (- 3 dB)	Total Length (in)	Weight (lbs.)	Radome Diam. (in)
	45 DEGREE ANTENNA							
HMD8V45-R05-H	45 degree Az. Pattern, 8 Bays, Vertical Polarization, Standard Beamtilt (0.5 deg.), 2300 -2500 MHz Freq. Band, 50 Ohm, 7/8" EIA Flange, 1.38 :1 Max. VSWR	18 dBi	1000 W (rms)	None	7.0 - 7.5 deg.	57"	50 lbs	8"
	60 DEGREE ANTENNA							
HMD8V60-R05-H	60 degree Azimuth pattern, 8 Bays, Vertical Polarization, Standard Beamtilt (0.5 deg.), 2300 -2500 MHz Freq. Band, 50 Ohm, 7/8" EIA Flange, 1.38 :1 Max. VSWR	17.0 dBi	1000 W (rms)	None	7.0 - 7.5 deg.	57"	40 lbs	5"
	90 DEGREE ANTENNA							
HMD8V90-R05-H	90 degree Az. Pattern, 8 Bays, Vertical Polarization, Standard Beamtilt (0.5 deg.), 2300 -2500 MHz Freq. Band, 50 Ohm, 7/8" EIA Flange, 1.38 :1 Max. VSWR	16 dBi	1000 W (rms)	None	7.0 - 7.5 deg.	57"	40 lbs	5"

List for Andrew Antennas for Sirius Radio Deployment

120 DEGREE ANTENNA

HMD8V120-R05	120 degree Azimuth pattern, 8 Bays, Vertical Polarization, Standard Beamtilt (0.5 deg.), 2300 - 2500 MHz Freq. Band, 50 Ohm, 7/8" EIA Flange, 1.38 :1 Max. VSWR	15.0 dBi	1000 W (rms)	None	7.0 - 7.5 deg.	57"	40 lbs	5"

160 DEGREE ANTENNA

HMD8V160-R05-H	160 degree Azimuth pattern, 8 Bays, Vertical Polarization, Standard Beamtilt (0.5 deg.), 2300 - 2500 MHz Freq. Band, 50 Ohm, 7/8" EIA Flange, 1.38 :1 Max. VSWR	15.0 dBi	1000 W (rms)	None	7.0 - 7.5 deg	57"	40 lbs	5"

180 DEGREE ANTENNA

HMD8PV180-R05-H	180 degree Azimuth pattern, 8 Bays, Vertical Polarization, Standard Beamtilt (0.5 deg.), 2300 - 2500 MHz Freq. Band, 50 Ohm, 7/8" EIA Flange, 1.38 :1 Max. VSWR	14.0 dBi	1000 W (rms)	None	7.0 - 7.5 deg	57"	40 lbs	5"

Note: All Directional (Sector) Antennas come with Type 'C' Mount

OMNI ANTENNAS

HMD8V360-R05-H	Omni pattern, 8 Bays, Standard Beamtilt (0.5 deg.), Vertical Polarization, 2300 -2500 MHz Freq. Band, 50 Ohm, 7/8" EIA Flange, 1.5 :1 Max. VSWR	11.5 dBi	1,000 W (rms)	None	7.0 - 7.5 deg.	44"	50 lbs	5"

Note: All Omni antennas come with Type 'A' Mount (for Top installation)

Boresight Gain: 0.00
Front to Back : 0.02 dB
H. Beamwidth : 360.00°

V. Beamwidth : 7.42°

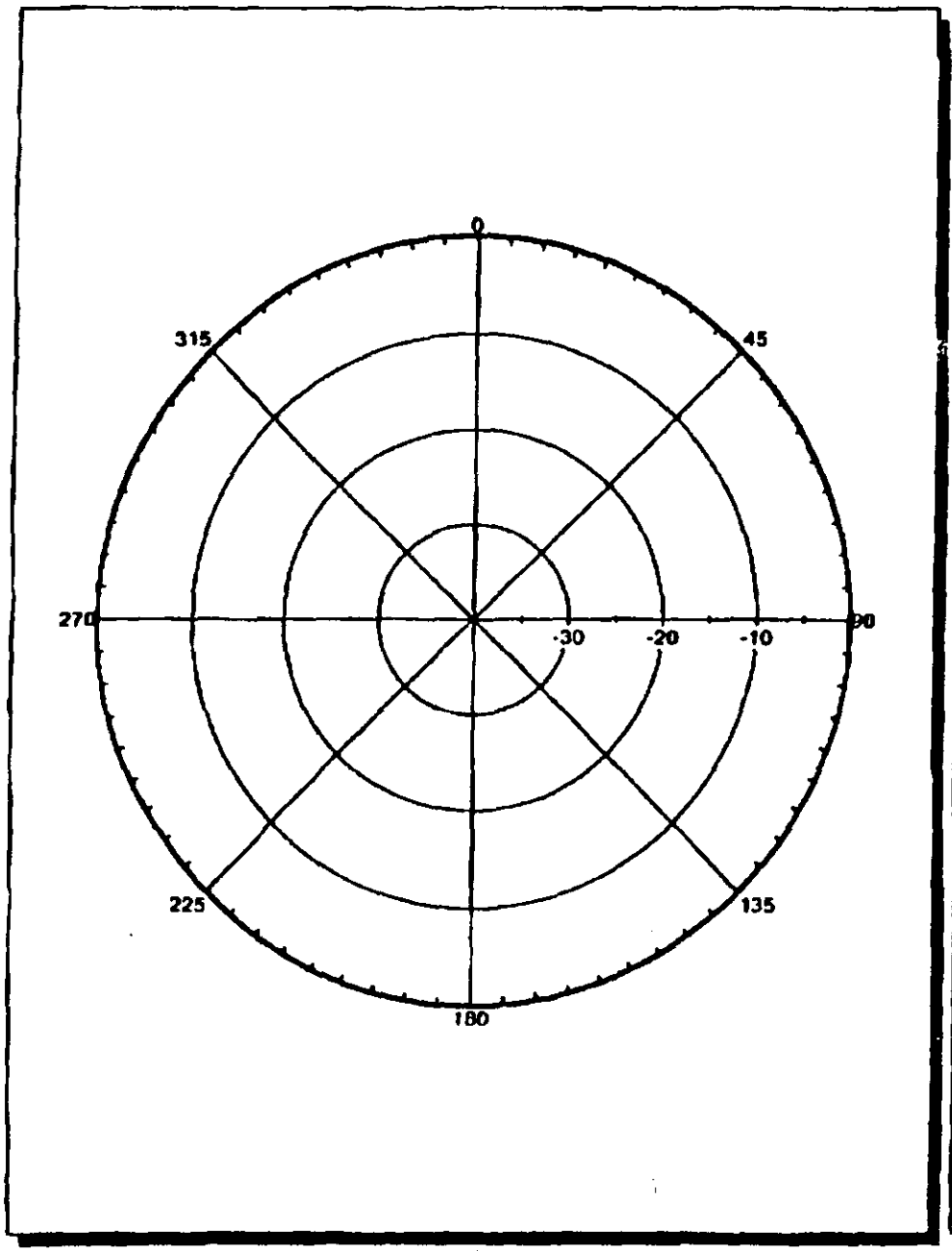

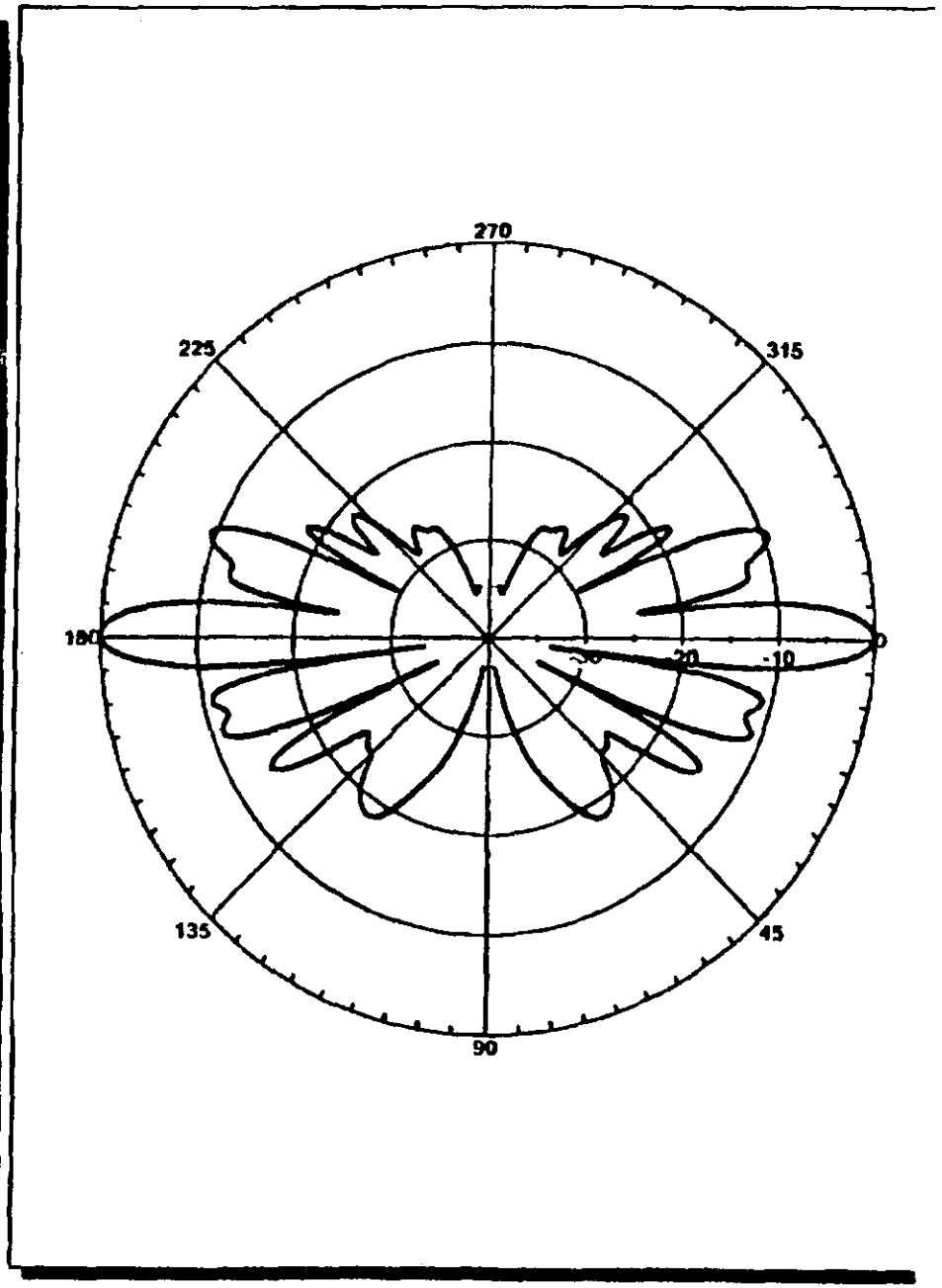

deciBel Planner 2.0
Copyright 2000 Northwood Technologies Inc.

Boresight Gain: 0.00
Front to Back : 29.07 dB
H. Beamwidth : 44.78°

V. Beamwidth : 7.48°

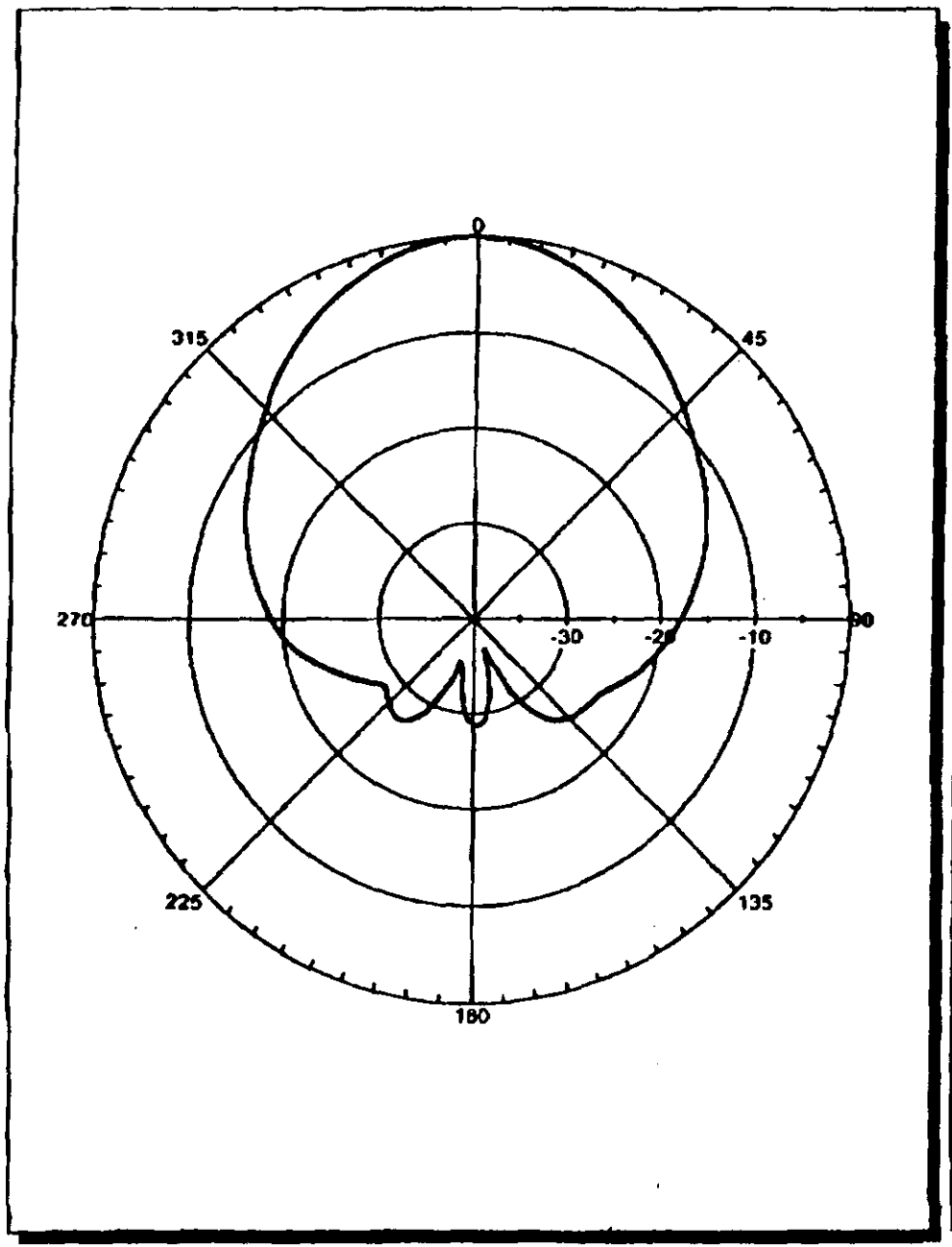

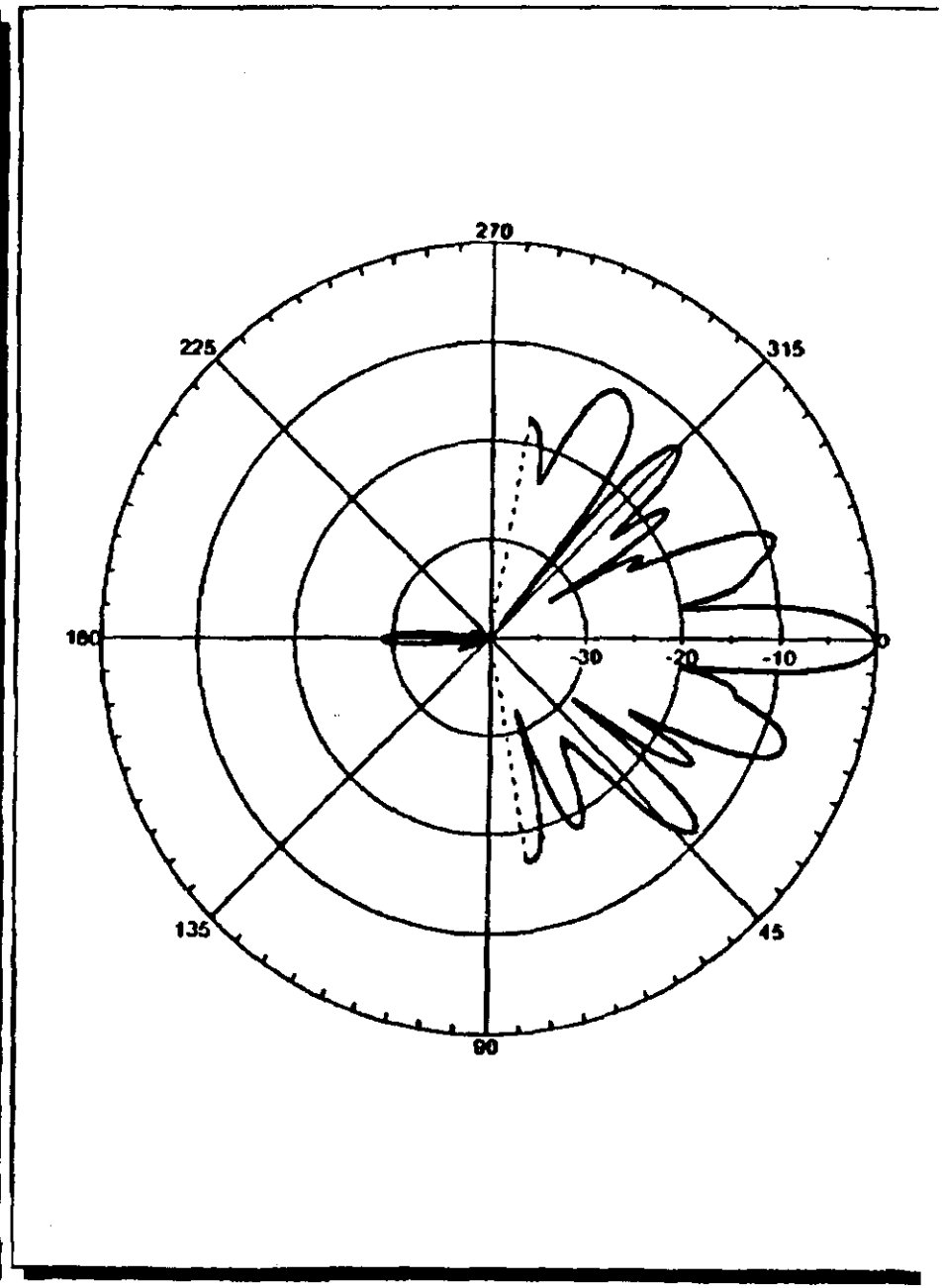

decibel Planner 2.0
Copyright 2000 Northwood Technologies Inc.

Boresight Gain: 10.62
Front to Back : 19.05 dB
H. Beamwidth : 88.75°

V. Beamwidth : 7.42°

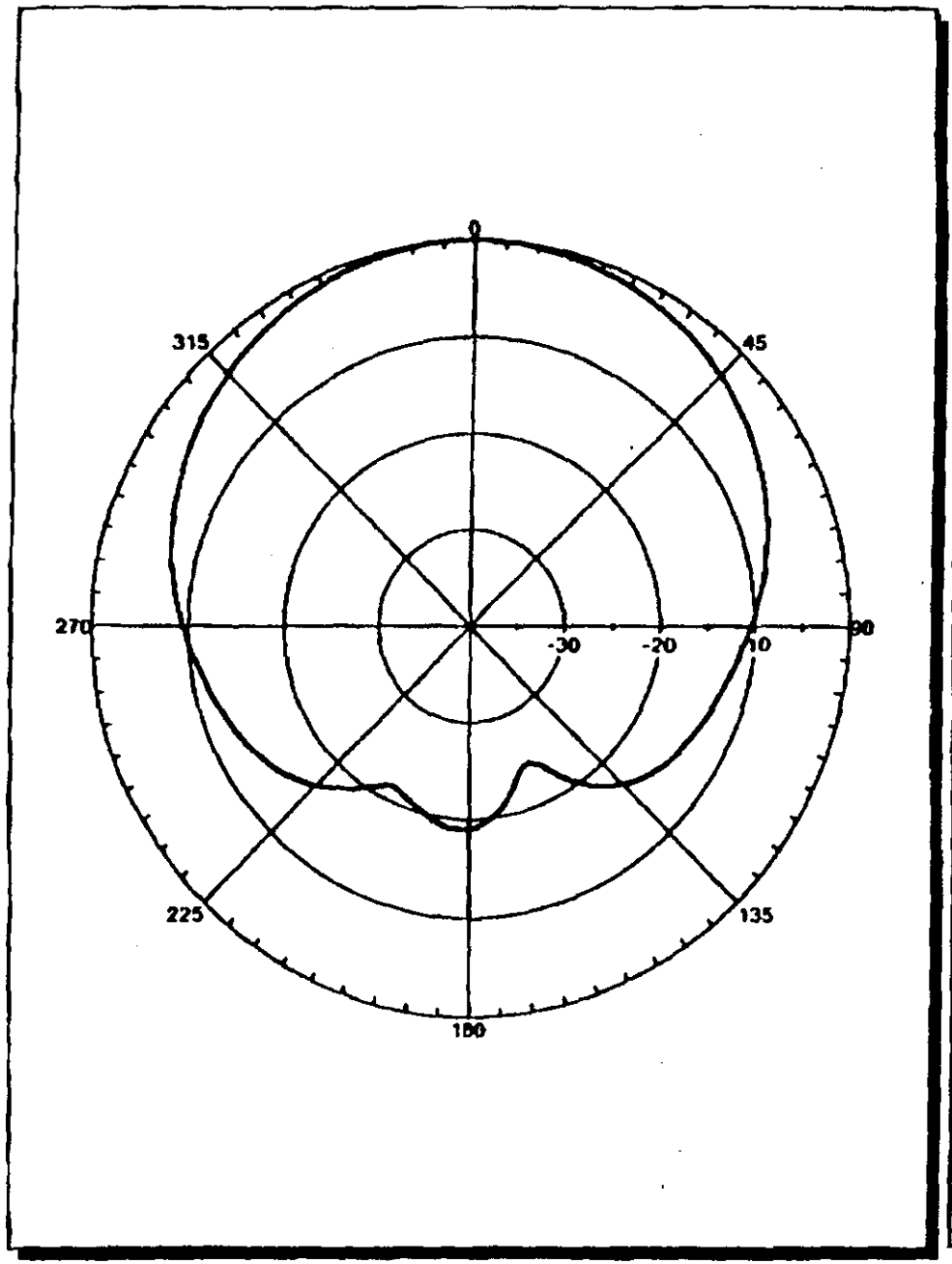

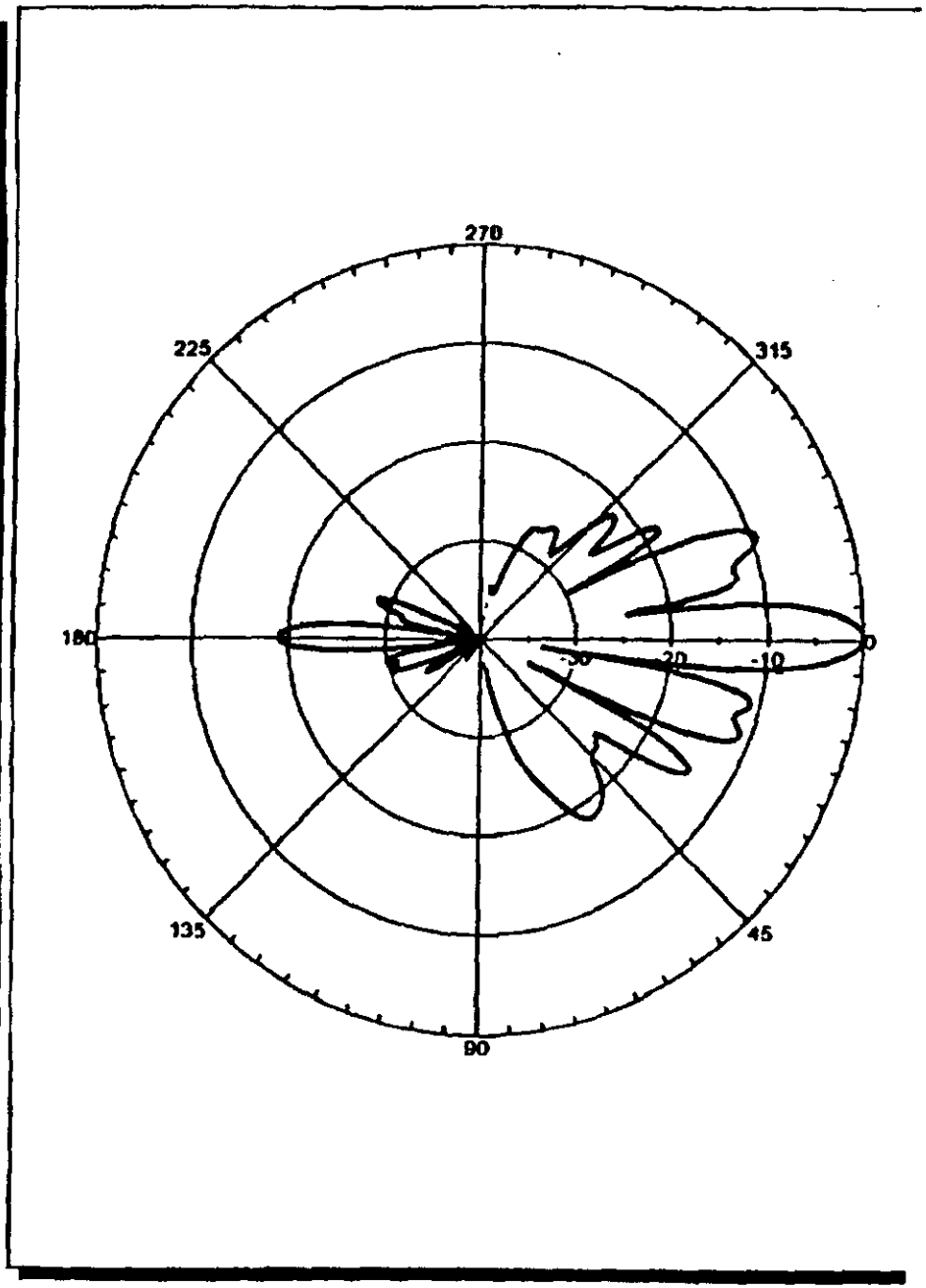

deciBel Planner 2.0
Copyright 2000 Northwood Technologies Inc.

Boresight Gain: 10.62
Front to Back : 18.31 dB
H. Beamwidth : 122.45°

V. Beamwidth : 7.42°

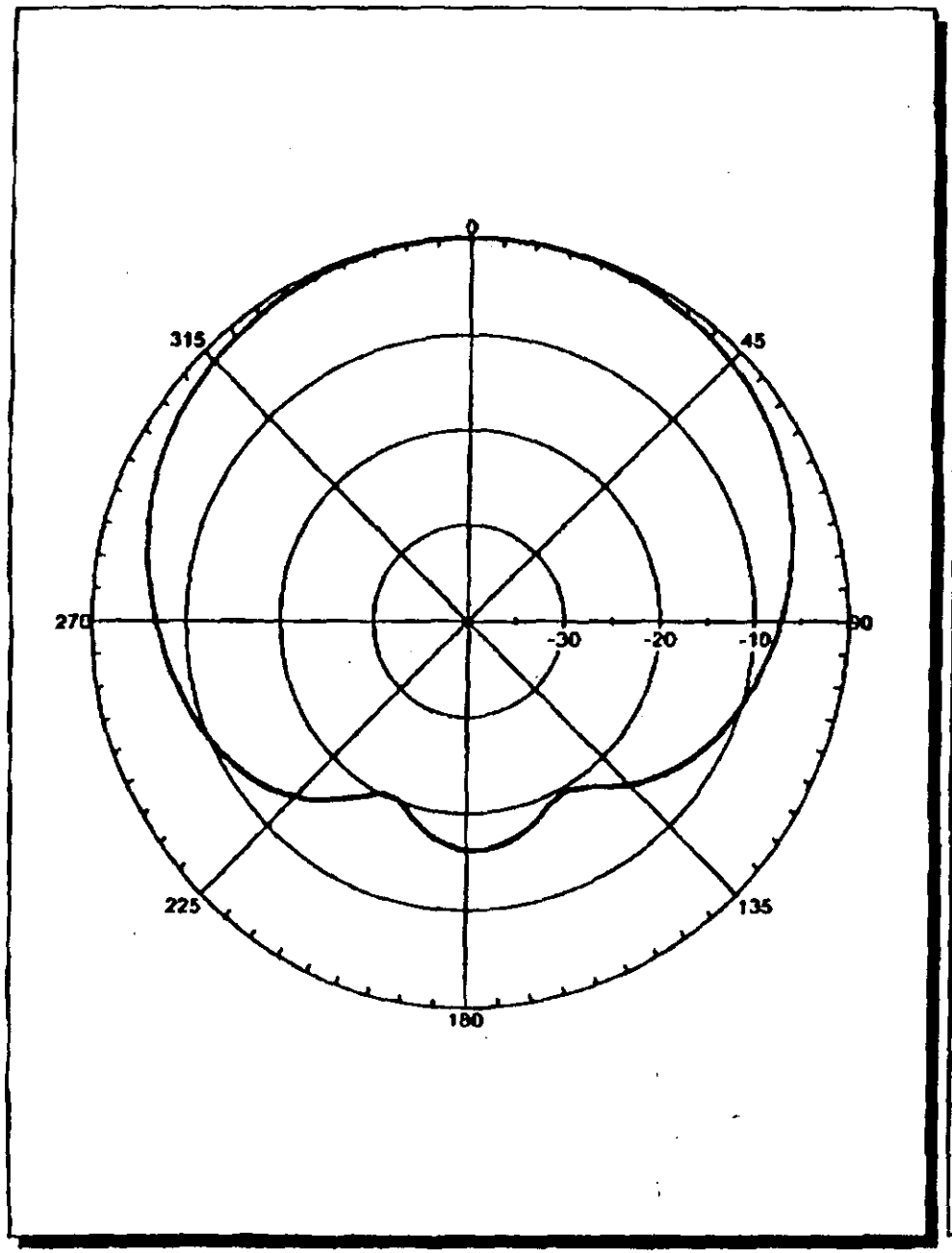

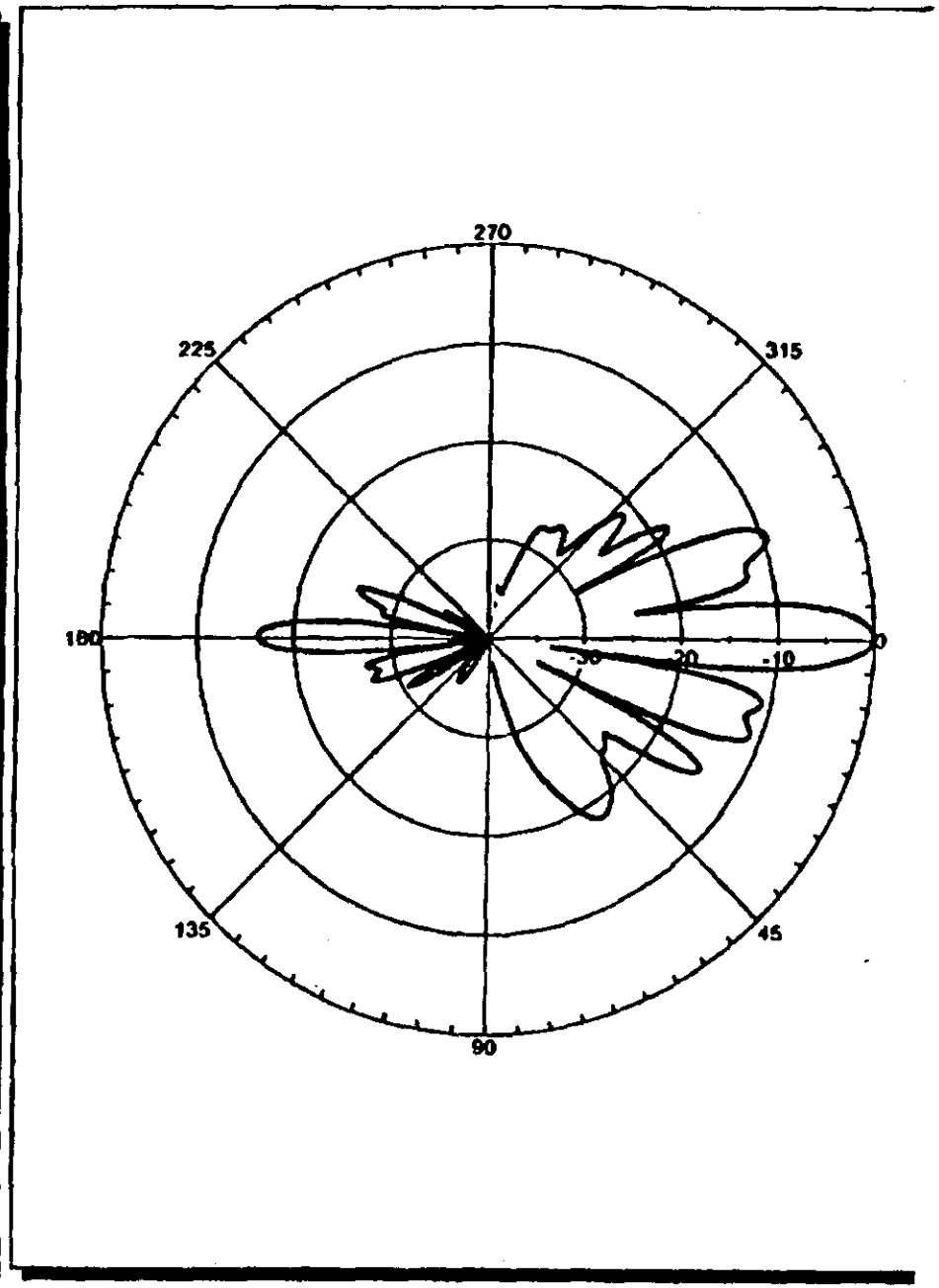

deciBel Planner 2.0
Copyright 2000 Northwood Technologies Inc.

Boresight Gain: 0.00
Front to Back : 12.48 dB
H. Beamwidth : 178.25°

V. Beamwidth : 7.42°

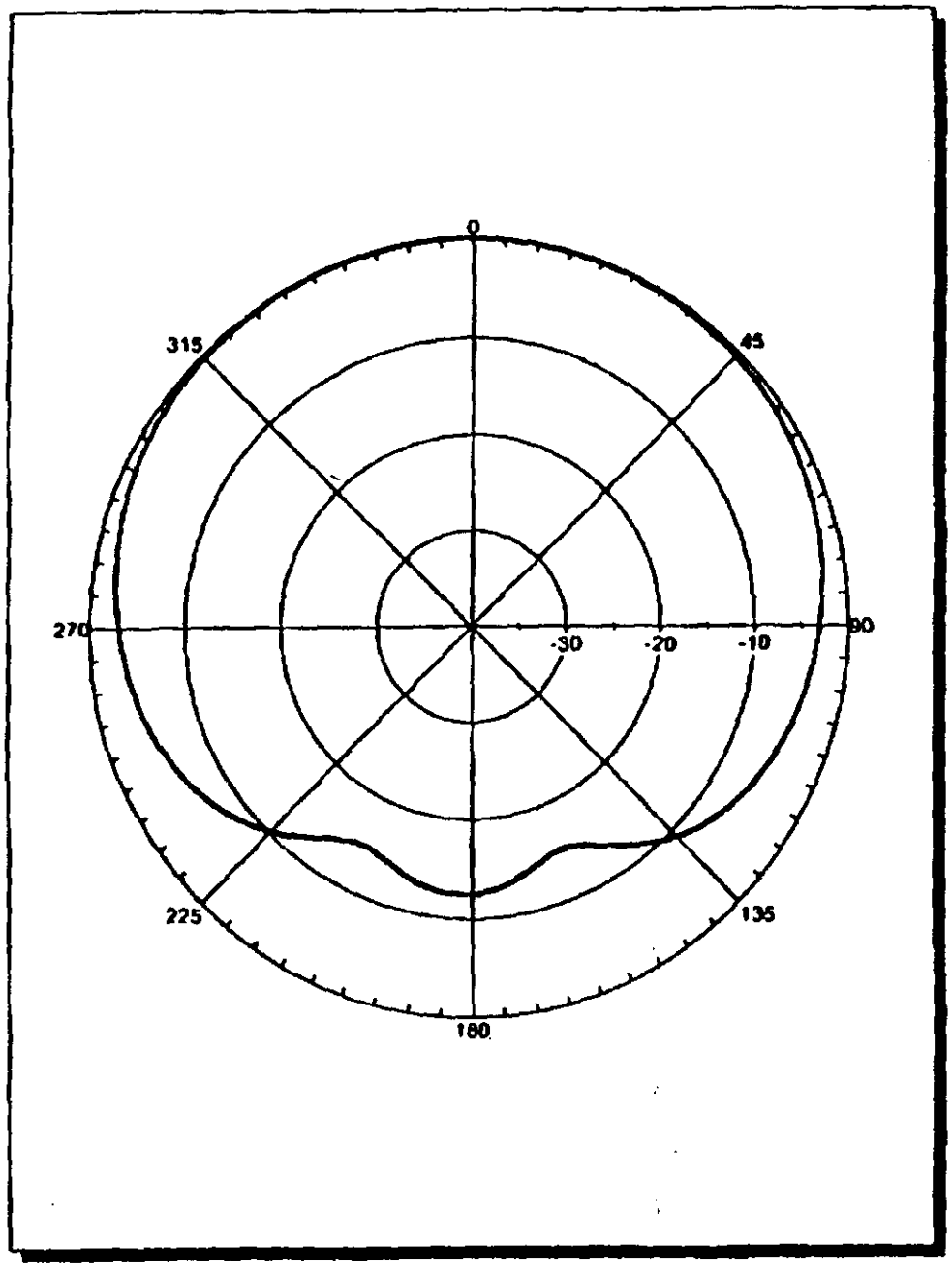

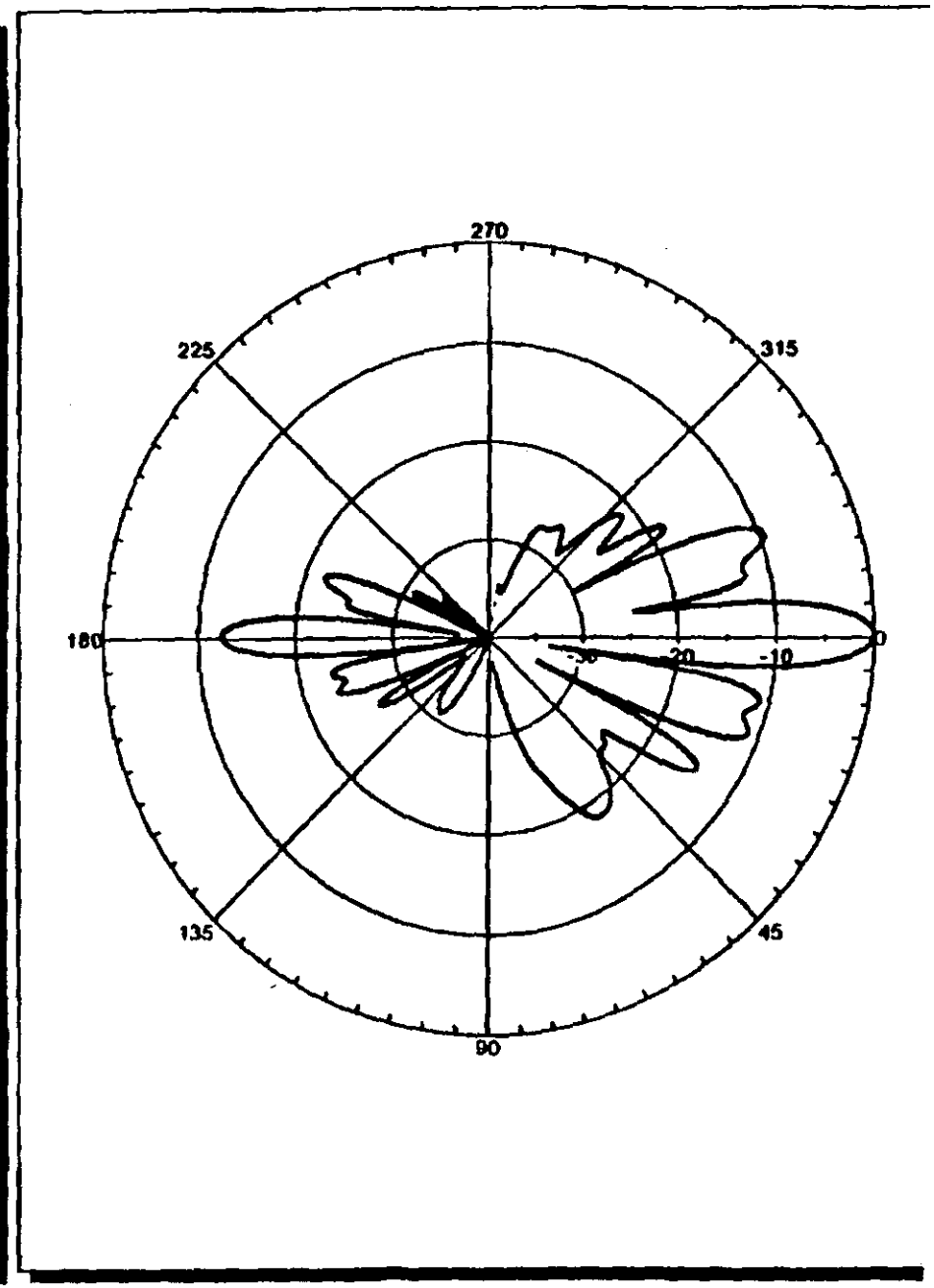

deciBel Planner 2.0
Copyright 2000 Northwood Technologies Inc.