ILEC Special Access Performance

Presentation to the FCC
April 2, 2002

Access Network Topology

- Special access is:
  - Dedicated (unswitched) links between a competitor's pop and its end-user customers
  - Provided via the same facilities used to supply UNE loops and transport
  - Widely used by competitive carriers for interoffice facilities and local loops

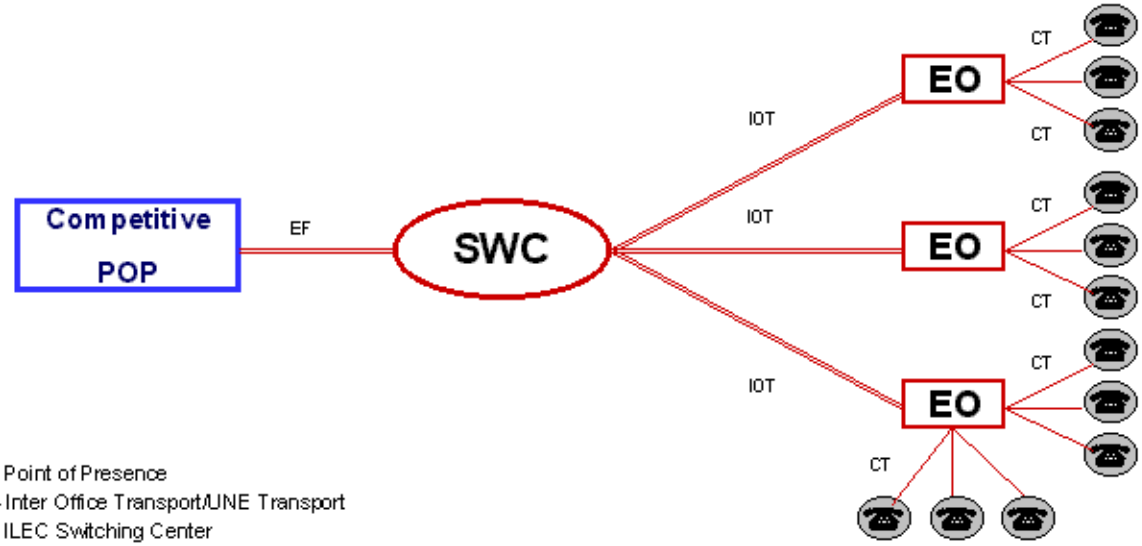

POP - Point of Presence
IOT - Inter Office Transport/UNE Transport
SWC - ILEC Switching Center
EO - ILEC End Office
EF - Entrance Facilities
CT - Channel Termination/UNE Loop

ILEC Loop and Transport Facilities are Often the Sole Means for Connecting ILEC Central Offices and End-user Customers, Even in Areas with Multiple Fiber Rings

- Necessary to win enterprise customers, because branch offices frequently located in suburbs or rural locations
- Replication of ILEC networks not viable for the foreseeable future

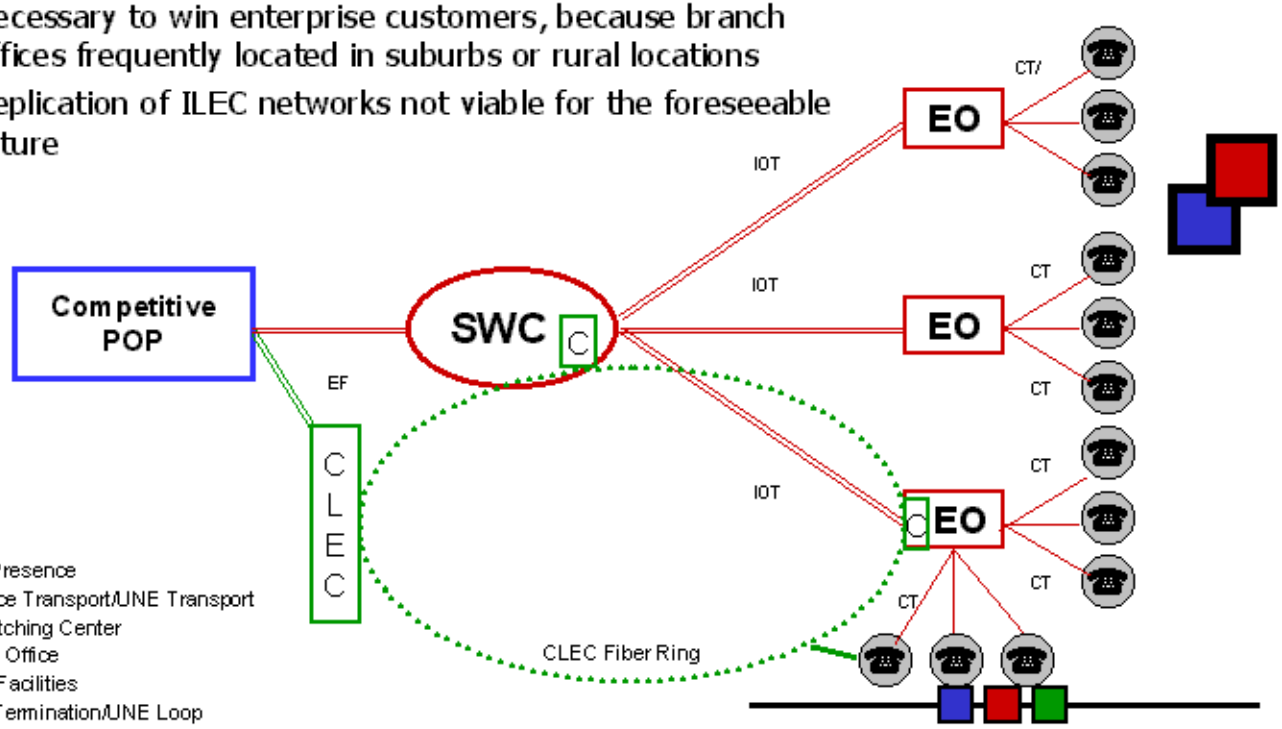

POP - Point of Presence
IOT - Inter Office Transport/UNE Transport
SWC - ILEC Switching Center
EO - ILEC End Office
EF - Entrance Facilities
CT - Channel Termination/UNE Loop
C - CLEC Collocation

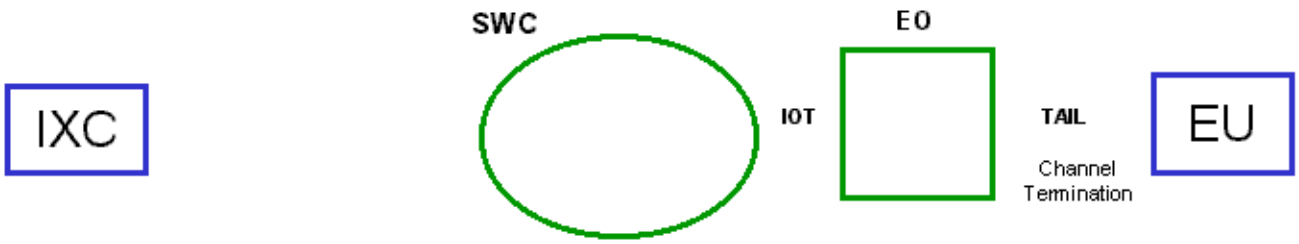

SWC = ILEC SERVING WIRE CENTER
C = COLLOCATION CAGE
IOT = INTEROFFICE TRANSPORT
EO = END OFFICE
DACS = 3-1 MUX
EU = END USER

= IXC = CAP

= ILEC

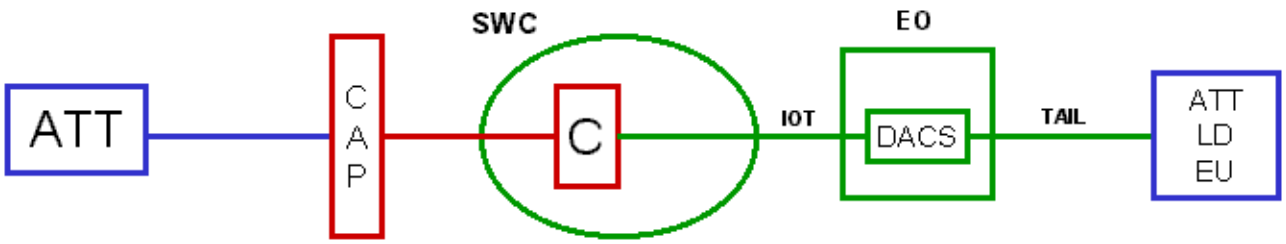

SWC = ILEC SERVING WIRE CENTER
C = COLLOCATION CAGE
IOT = INTEROFFICE TRANSPORT
EO = END OFFICE
DACS = 3-1 MUX
EU = END USER

= IXC

= ILEC = CAP

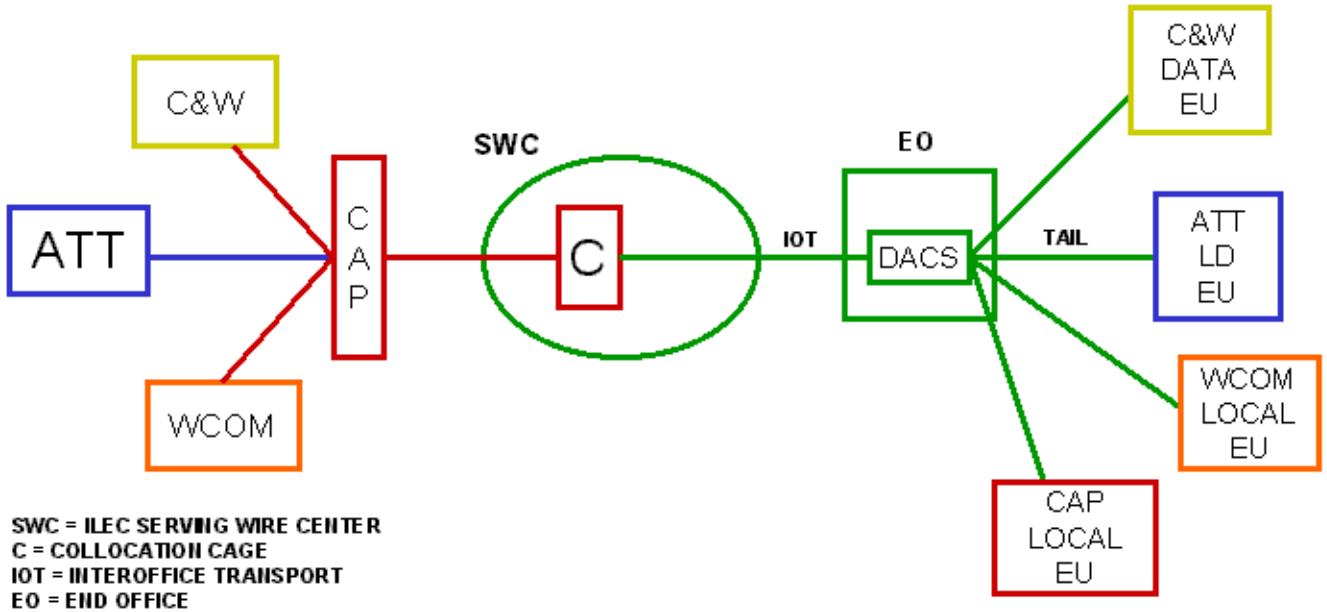

SWC = ILEC SERVING WIRE CENTER
C = COLLOCATION CAGE
IOT = INTEROFFICE TRANSPORT
EO = END OFFICE
DACS = 3-1 MUX
EU = END USER

= IXC

= ILEC = CAP

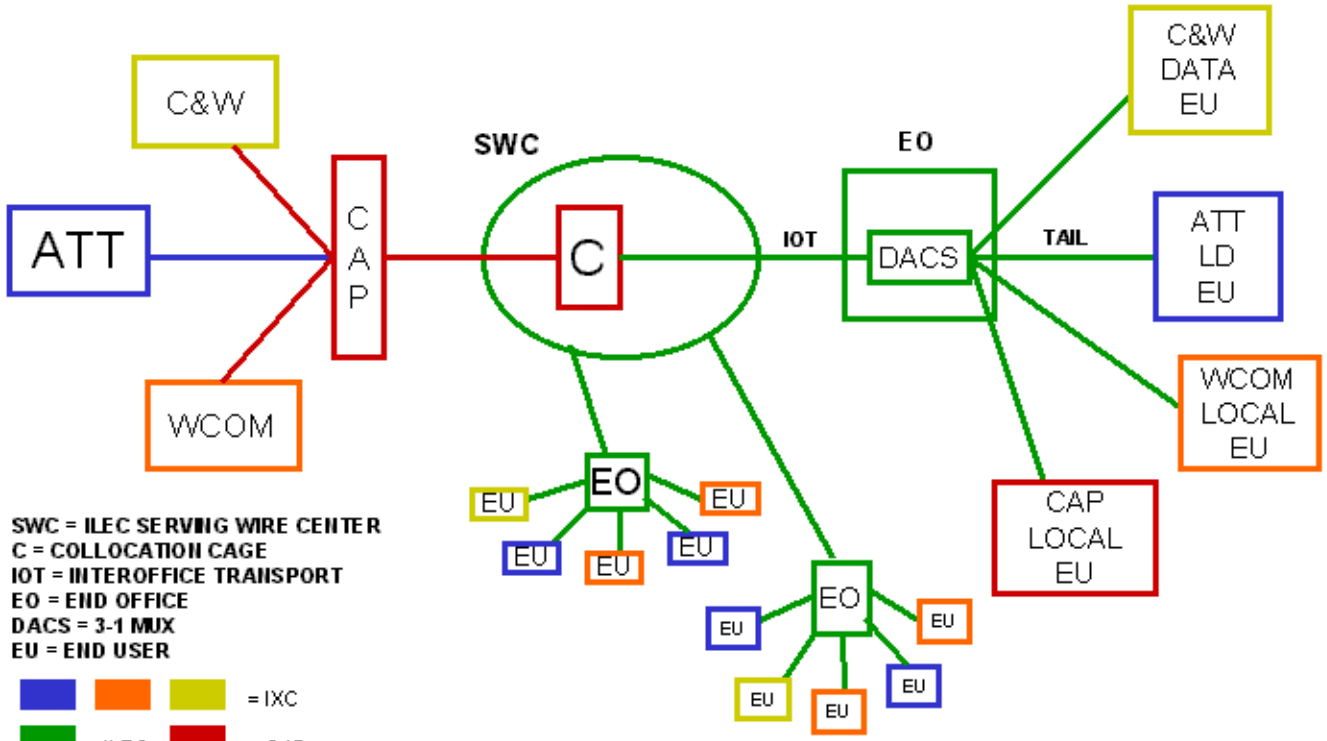
C&W
ATT
WCOM
C
A
P
SWC
C
IOT
EO
DACS
TAIL
C&W
DATA
EU
ATT
LD
EU
WCOM
LOCAL
EU
CAP
LOCAL
EU
EO
EU
EU
EU
EU
EO
EU
EU
EU
EU
EU
SWC = ILEC SERVING WIRE CENTER
C = COLLOCATION CAGE
IOT = INTEROFFICE TRANSPORT
EO = END OFFICE
DACS = 3-1 MUX
EU = END USER
= IXC
= ILEC
= CAP

Current Uses of Special Access

- Originate, terminate, and transport:
  - **Interstate** traffic -- IXCs require dedicated facilities to link their networks with ILEC switching centers or with end-user customers
  - **Intrastate** traffic (including local) -- CLECs often cannot use UNEs and instead must secure loops and transport, or combinations thereof via special access tariffs
- ILECs actively encourage intrastate use of interstate special access in lieu of UNE loops and transport
- An overwhelming percentage of special access services are provided under interstate tariffs

CLECs and IXCs Are Heavily Reliant on ILEC Special Access

- IXCs and CLECs are heavily reliant on special access for:
  - Transport between ILEC central offices
  - Connectivity from collocation site to end-user customers
  - Connectivity from collocation site to their own premises
- Self-provisioning is not an economically viable alternative in most cases at this stage in the development of local competition